Barstools

Installation Manual

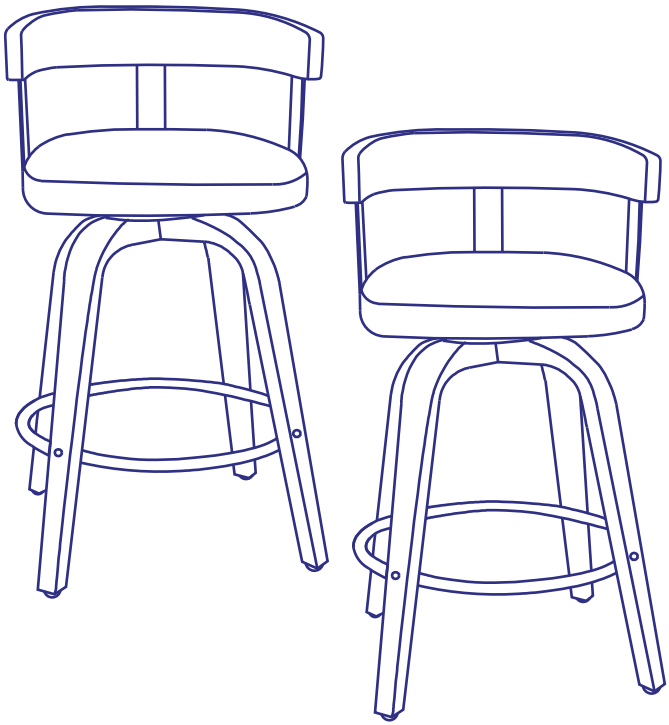

Product Assembly Diagram

1 PRE-INSTALLATION PREPARATION ---------- 01

1-1 Thank you for choosing our products ---------- 01

1-2 Package contents ---------- 01

1-3 Precautions ---------- 01

2 INSTALLING MODULES ---------- 02

2-1 Product Assembly Diagram ---------- 02

2-2 Suggestion ---------- 02

2-3 Parts List ---------- 03

2-4 Assembly Steps ---------- 04

3 CUSTOMER SERVICE ---------- 09

4 PROBLEMS YOU MAY ENCOUNTER ---------- 09

Thank you for choosing our products

Before assembly, please read this Installation Manual first, and check according to Parts List to make sure all parts are included.

Package contents

Barstools	Assembly tools	Instruction manual

Precautions

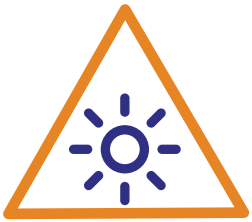

Avoid long-term direct sunlight exposure.



Keep away from sharp objects.



Keep away from corrosive substances.



Keep assembled parts away from infants/children to avoid accidental ingestion.



This product must be assembled by an adult before use.

Product Assembly Diagram

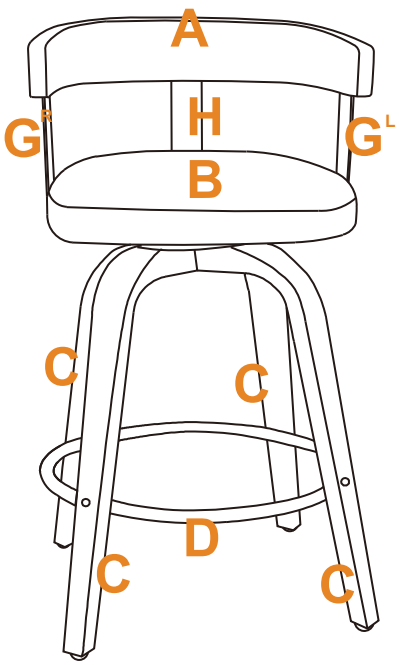

Suggestion



The installation takes 20 minutes

Parts List

Backboard  A x2	**Cushion**  B x2	**Wooden legs** 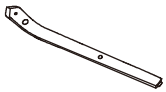 C x8	**Iron ring** 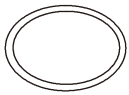 D x2
Turntable  E x2	**Iron plate**  F x2	**Iron plate** 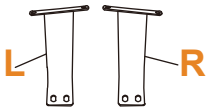 G x4	**Iron plate**  H x2

Screws 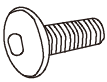 M6*25MM I x16	**Screws**  M6*20MM J x20	**Screws** 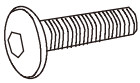 M6*30MM K x8	**Screws**  M6*20MM L x12
Blank cap  M x8	**Allen Key**  N x2		

Assembly Steps

STEP1

Use an Allen Key (N) to tighten the screw (L) to 50%.

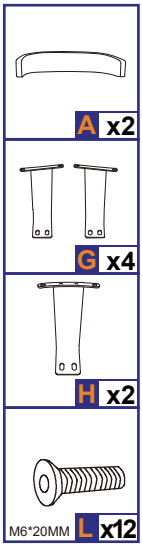

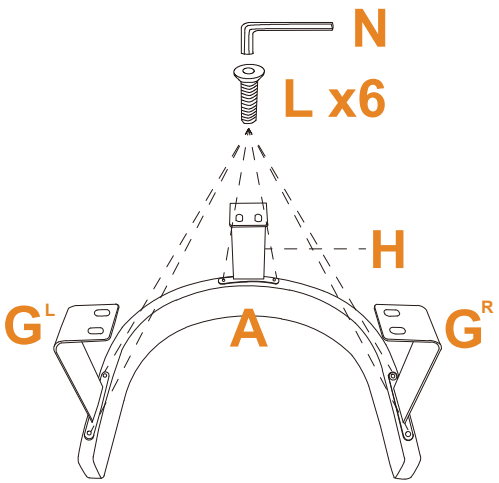

x2

STEP2

Use Allen Key (N) and screws (J) to connect the Cushion (B) to the Backboard (A).After installing Cushion (B), fully tighten the screws (L) on Backboard (A).

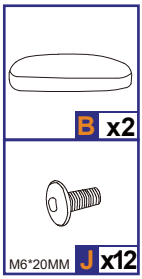

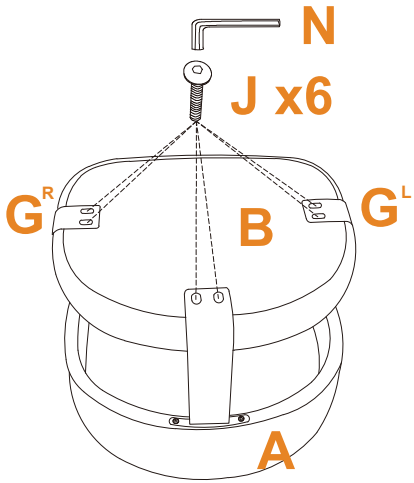

x2

Assembly Steps

STEP 3

Use Allen Key (N) and screws (I) to attach metal plate (F) to four wooden legs (C). Tighten screws (I) to 80% torque.

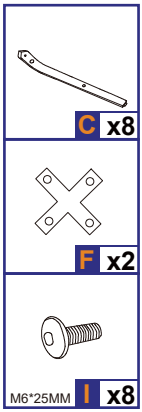

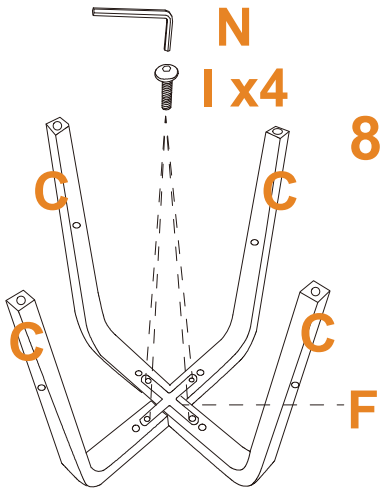

x2

STEP 4

Use Allen Key (N) and screws (K) to fasten metal ring (D) to four wood legs (C). Tighten screws (K) to 100% torque.

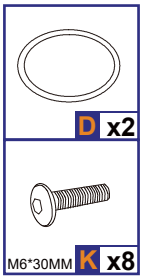

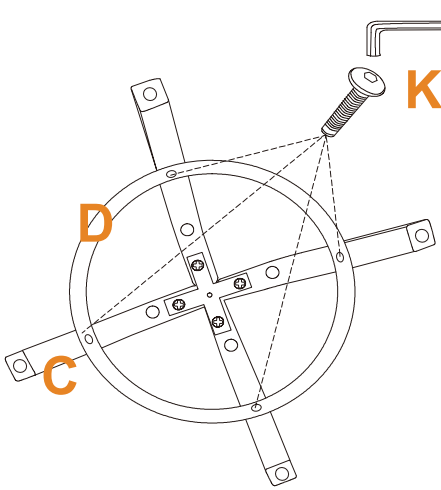

x2

STEP 5

Use Allen Key (N) and screws (I) to attach Turntable (E) to four wood legs (C). Tighten screws (I) to 100% torque.

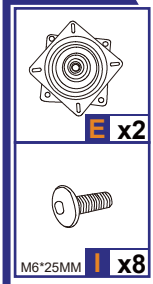

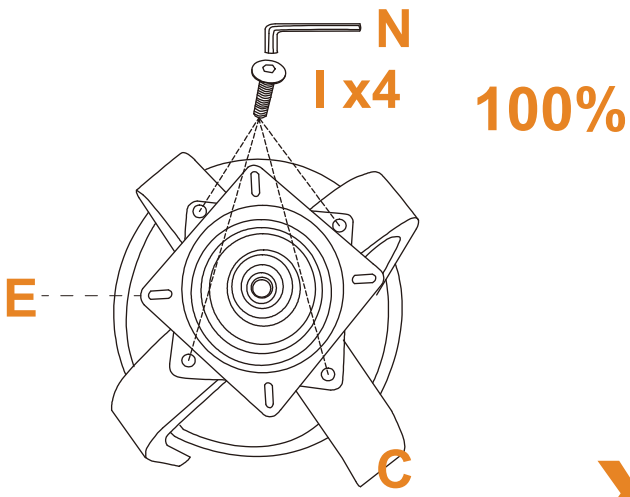

STEP 6

Tighten screws (I) from Step 3 to 100% torque.

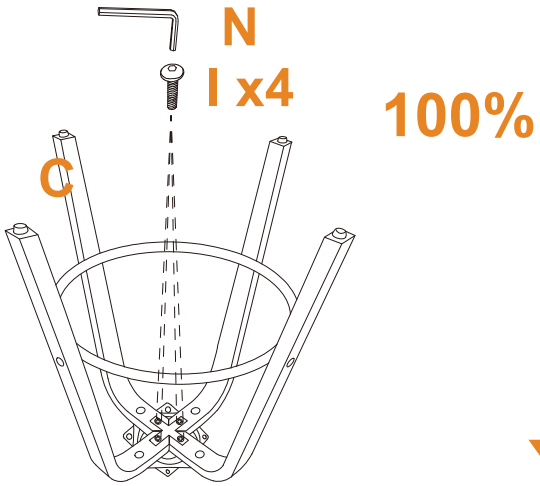

STEP 7

Use Allen Key (N) and screws (J) to connect the assembled chair base to seat cushion (B). Tighten screws (J) to 100% torque.



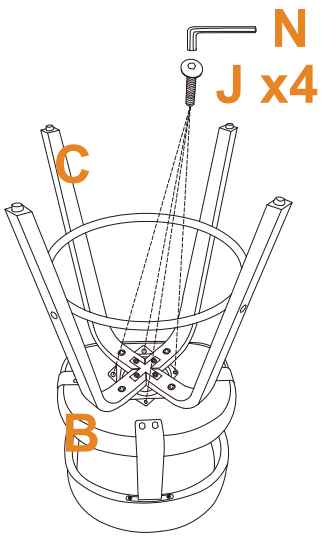

100%

x2

STEP 8



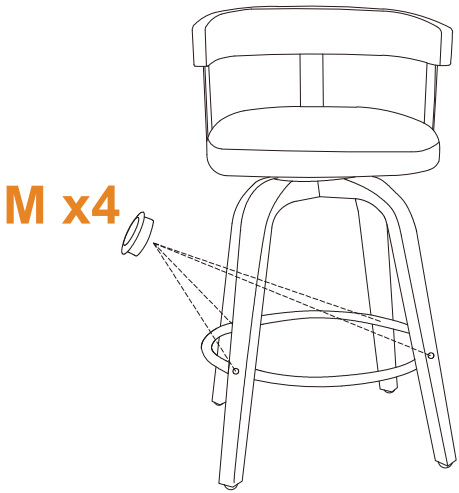

x2

STEP 9

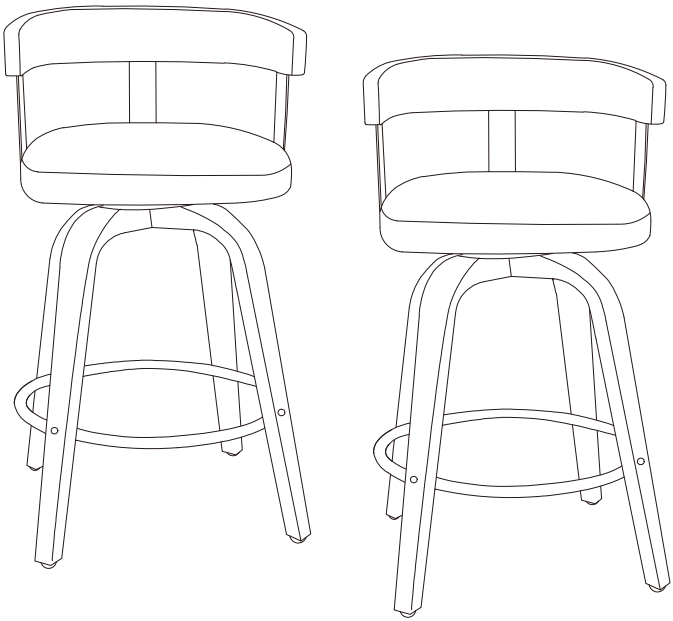

PROBLEMS YOU MAY ENCOUNTER

PART	PROBLEM	SOLUTION
ALL Product	Parts are missing, defective or having wrong parts in package	You can contact us via purchasing platform or reach us via email, and we will get back to you within 24 hours.
	Having issue(s) while reading the instruction or completing the assembly.	You can contact us and we will get back to you within 24 hours. Or, you can reach us via after-sales email.
	Encountering non-human caused damage during usage.	If the product is damaged due to non-human causes, please keep the product and send us photos of it. We will ascertain the cause of the product damage within 48 hours and provide you with a satisfactory solution.
	The product is unstable after being assembled.	1.Check if the screws are tightened. 2.Read throughout the manual, check are there any parts installed incorrectly or missing assembled. 3.If your problem still can't be solved, please feel free to contact us.
	Broken,dirty or missing	You can contact us and we will get back to you within 24 hours. Or, you can reach us via after-sales email.

CUSTOMER SERVICE

Quick Response within 24 Hours

If you are still unable to resolve the issue you are experiencing,please contact us immediately via our support email.It doesn't matter if the product has been installed or not,our customer support team will respond within 24 hours and assist you quickly and efficiently.The most efficient way to confirm your problem to us is to attach a video and photograph,which illustrates your product issues.