TEAR SHEET



Rally 15" Sconce

Item # TOB 2518HAB-L

Designer: Thomas O'Brien

Height: 14.75"
Width: 5"
Extension: 6.25"
Backplate: 4" x 6" Rectangle
Finishes: BZ, BZ/HAB, HAB, PN
Shade Treatments: L, WG
Shade Details: 3.5" x 5" x 6"
Socket: E26 Keyless
Wattage: 15 LED A19
Weight: 2 Pounds
Note: 120V Configuration Only | Requires Smaller Outlet Box

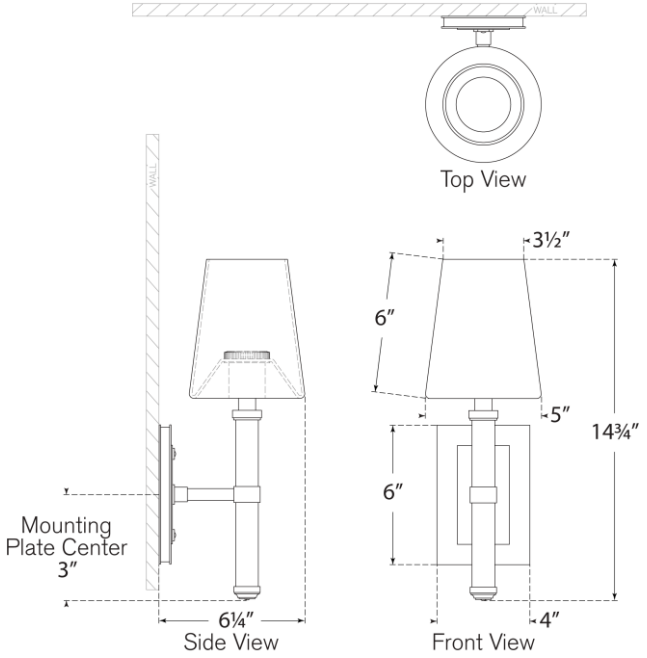

VISUAL COMFORT & CO.