NTQ®
Better Life Together

213 675 2021
support@trendytotesinc.com
162 Atlantic St, Pomona, CA 91768

SIZE DETAILS

HIGH QULITY ACRYLIC SHOWER BASE

support@trendytotesinc.com
213 675 2021

SCAN ME
PRODUCT INSTRUCTION VIDEO
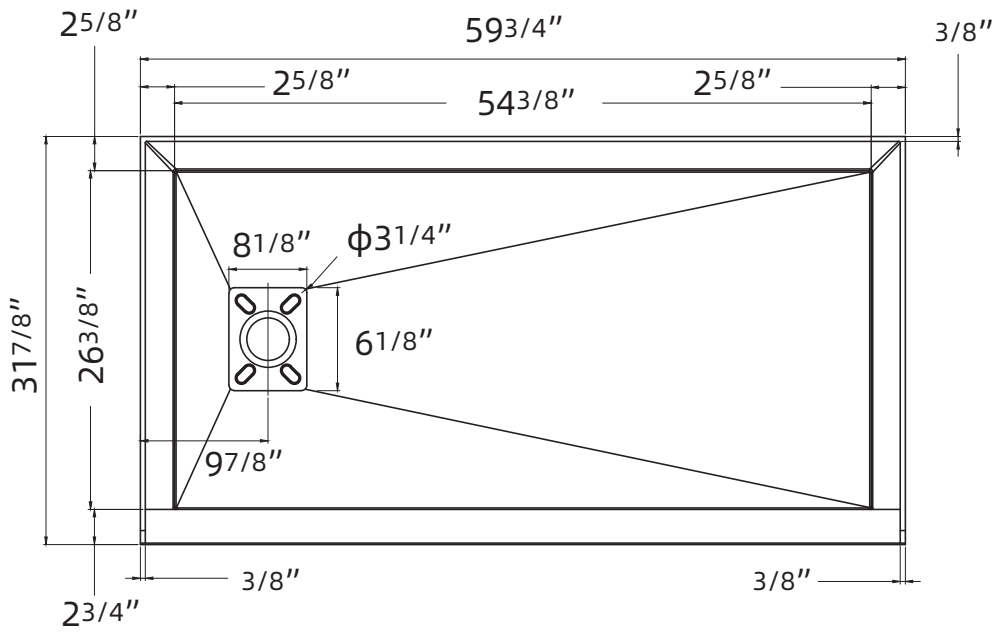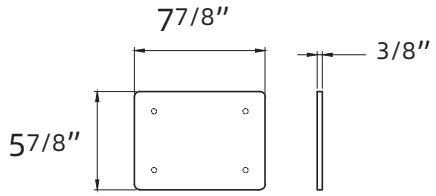
GS-SP6032F-L