ASSEMBLY INSTRUCTION

Console Table 3 Drawers

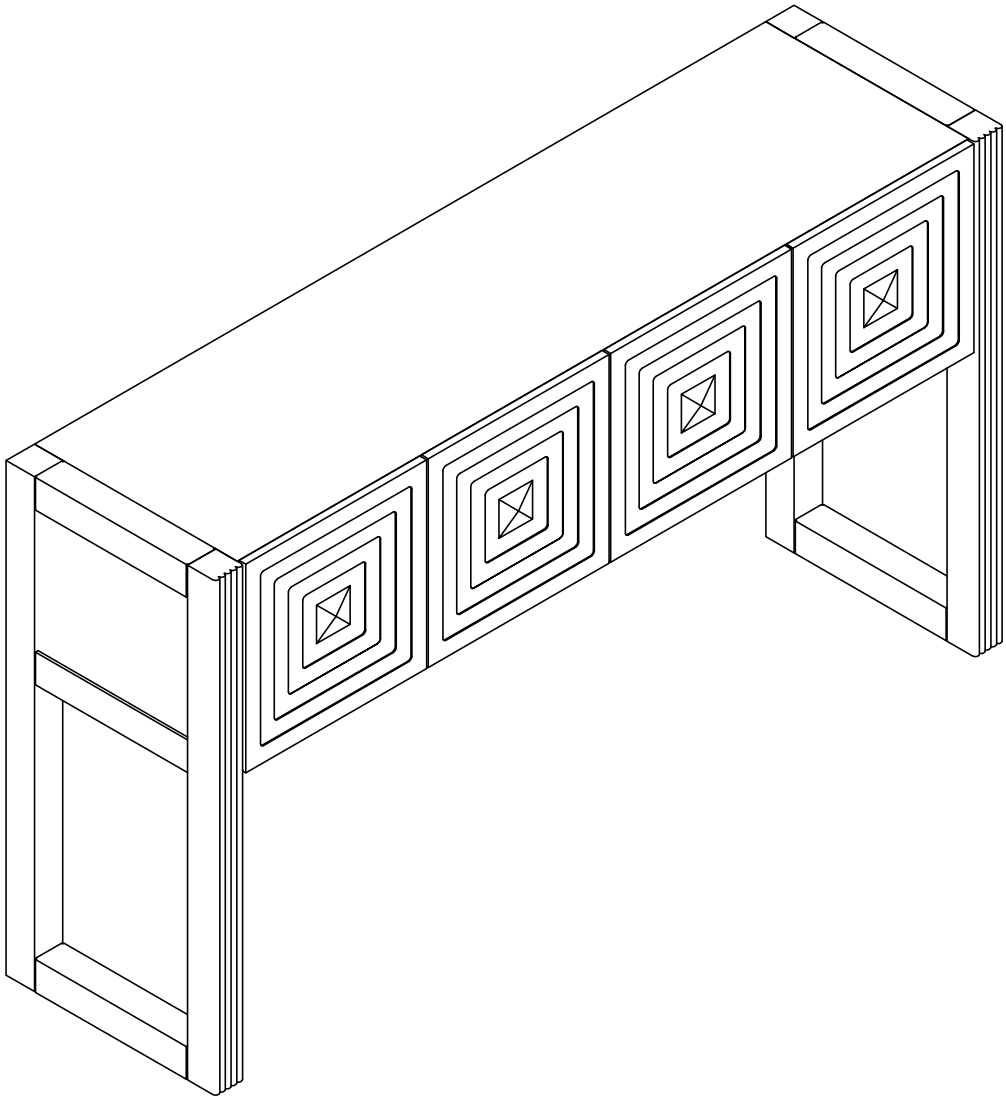

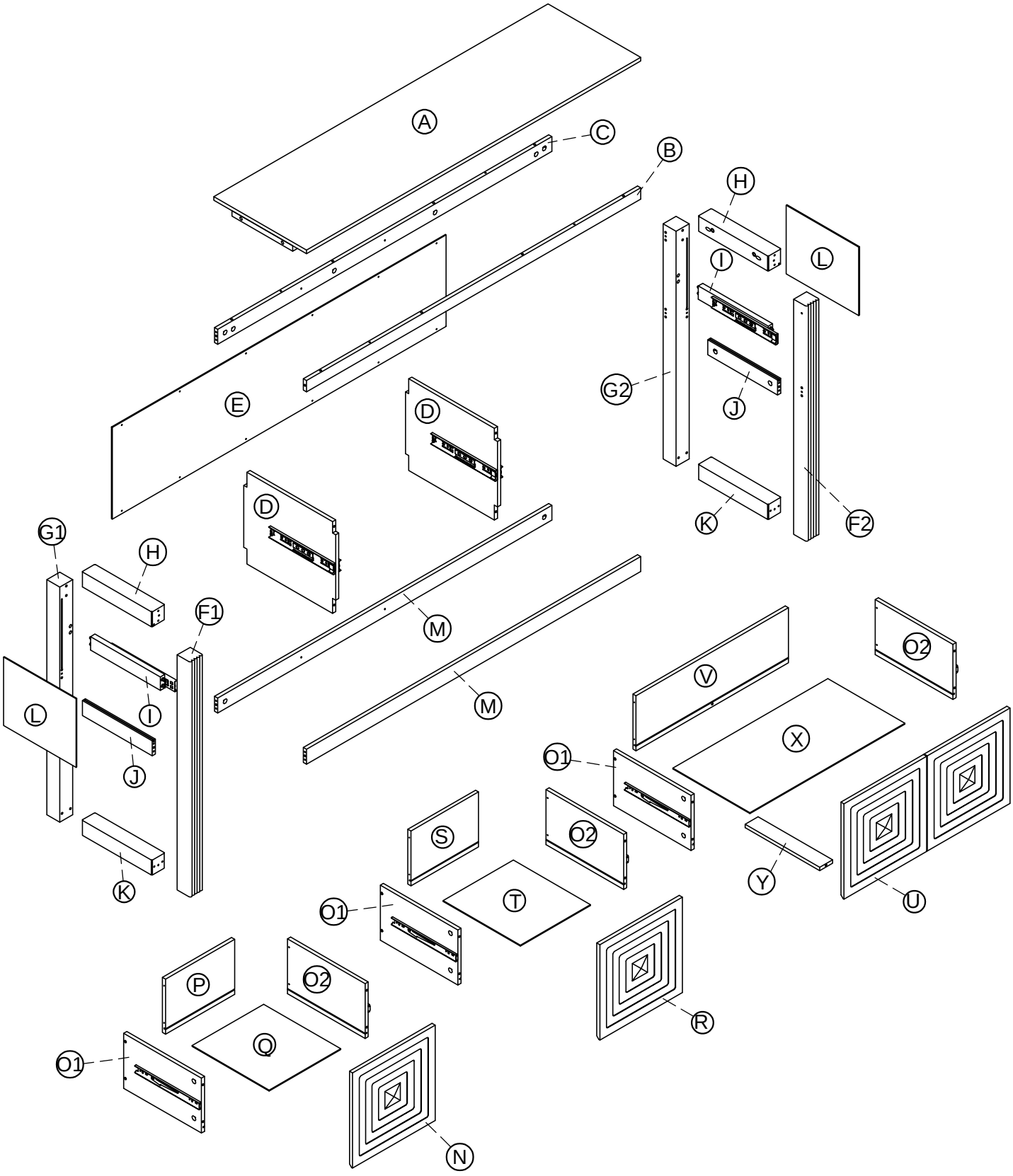
A
C
B
H
I
L
G2
J
E
D
D
K
F2
G1
H
F1
M
M
L
I
J
K
O2
V
X
O1
S
O2
T
Y
U
O1
P
O2
Q
R
O1
N

PACKAGE CONTENTS

(A) x 1 Top Table 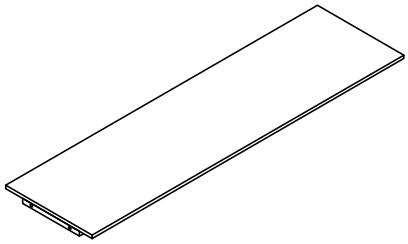	(G1) x 1 Back Left Leg 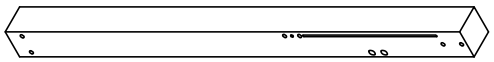
(B) x 1 Upper Front Rail 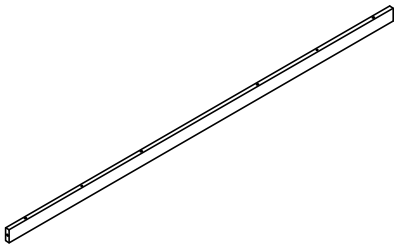	(G2) x 1 Back Right Leg 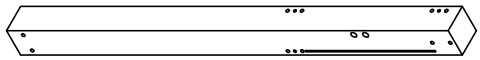
(C) x 1 Upper Back Rail 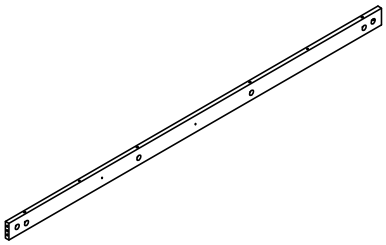	(H) x 2 Upper Side Rail 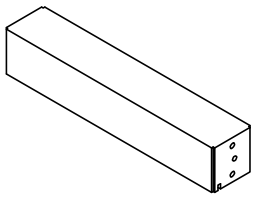
(D) x 2 Middle Vertical Divider 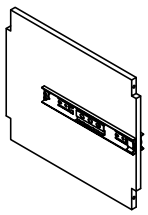	(I) x 2 Drawer Slide Support Rail 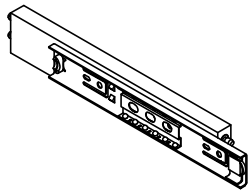
(E) x 1 Back Panel 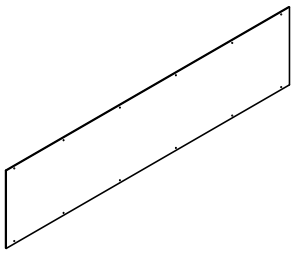	(J) x 2 Middle Side Rail 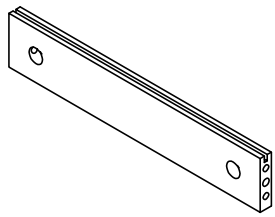
(F1) x 1 Front Left Leg 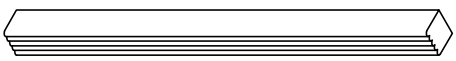	(K) x 2 Bottom Side Rail 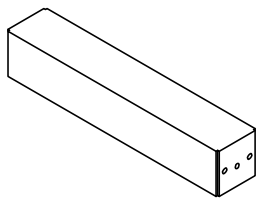
(F2) x 1 Front Right Leg 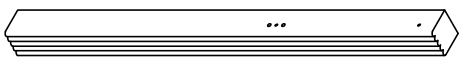	(L) x 2 Side Panle 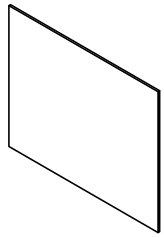

PACKAGE CONTENTS

(M) x 2 Middle Rail 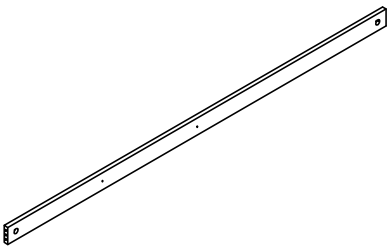	(S) x 1 Middle Drawer Back Panel 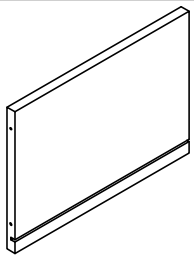
(N) x 1 Left Drawer Front 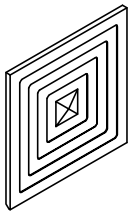	(T) x 1 Middle Drawer Bottom Panel 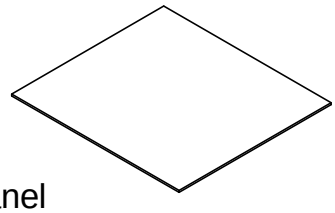
(O1) x 3 Left Drawer Side 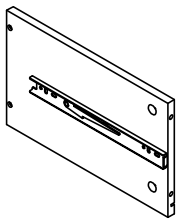	(U) x 1 Right Drawer Front 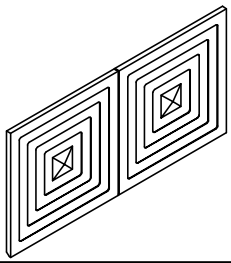
(O2) x 3 Right Drawer Side 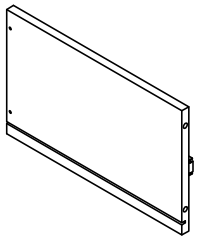	(V) x 1 Right Drawer Back Panel 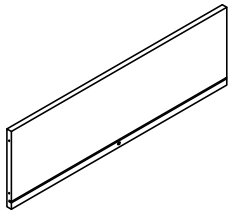
(P) x 1 Left Drawer Back Panel 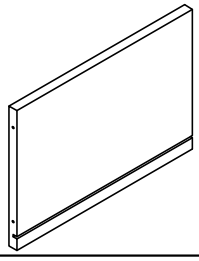	(X) x 1 Right Drawer Bottom Panel 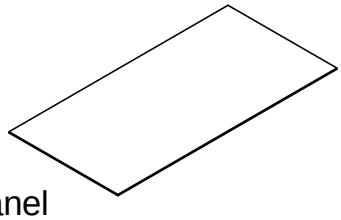
(Q) x 1 Left Drawer Bottom Panel 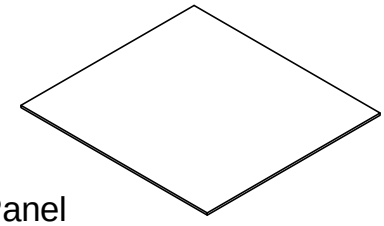	(Y) x 1 Bottom Support Rail 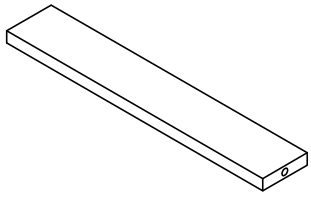
(R) x 1 Middle Drawer Front 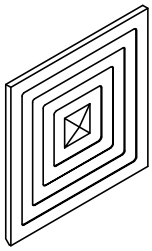	

PACKAGE CONTENTS

1	2	3	4
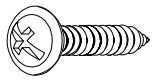 Ø4x15mm 13PCS	 Ø4x25mm 13PCS	 Ø4x50mm 9PCS	 Ø15x9mm 43PCS
5	6	7	8
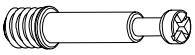 Ø6 x35 mm 43PCS	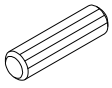 Ø6 x30 mm 41PCS	 M6x40mm 5PCS	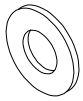 Ø6x16mm 5PCS
9	10		
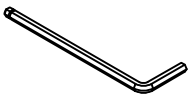 1PC	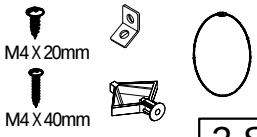 2 Sets		

STEP 1

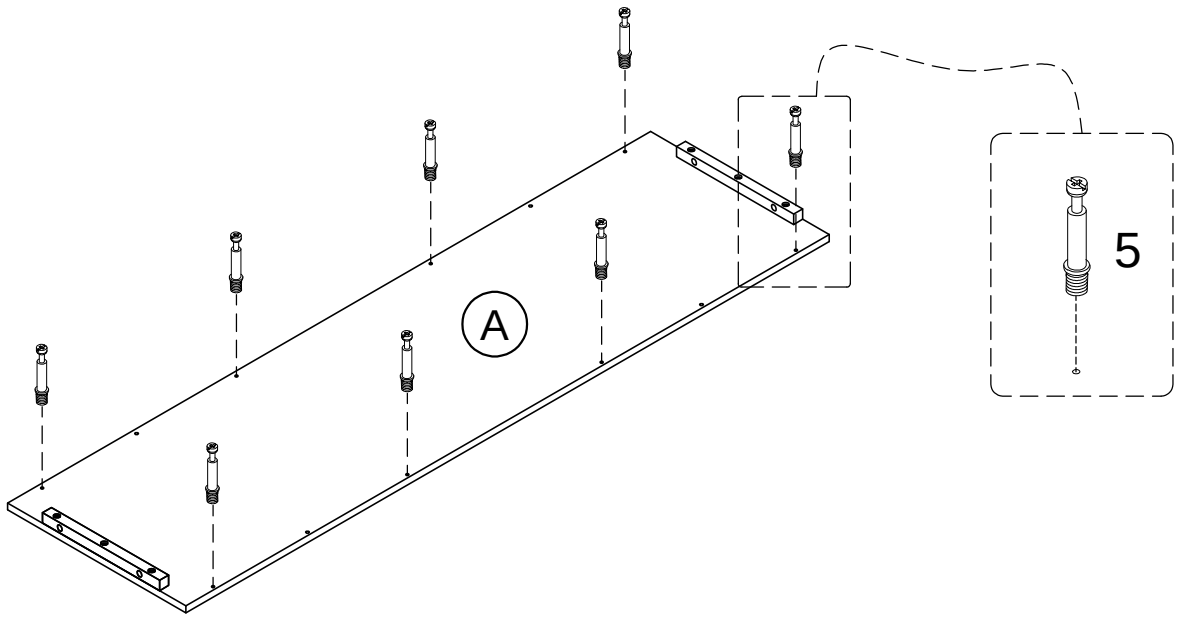

5	8PCS

STEP 2

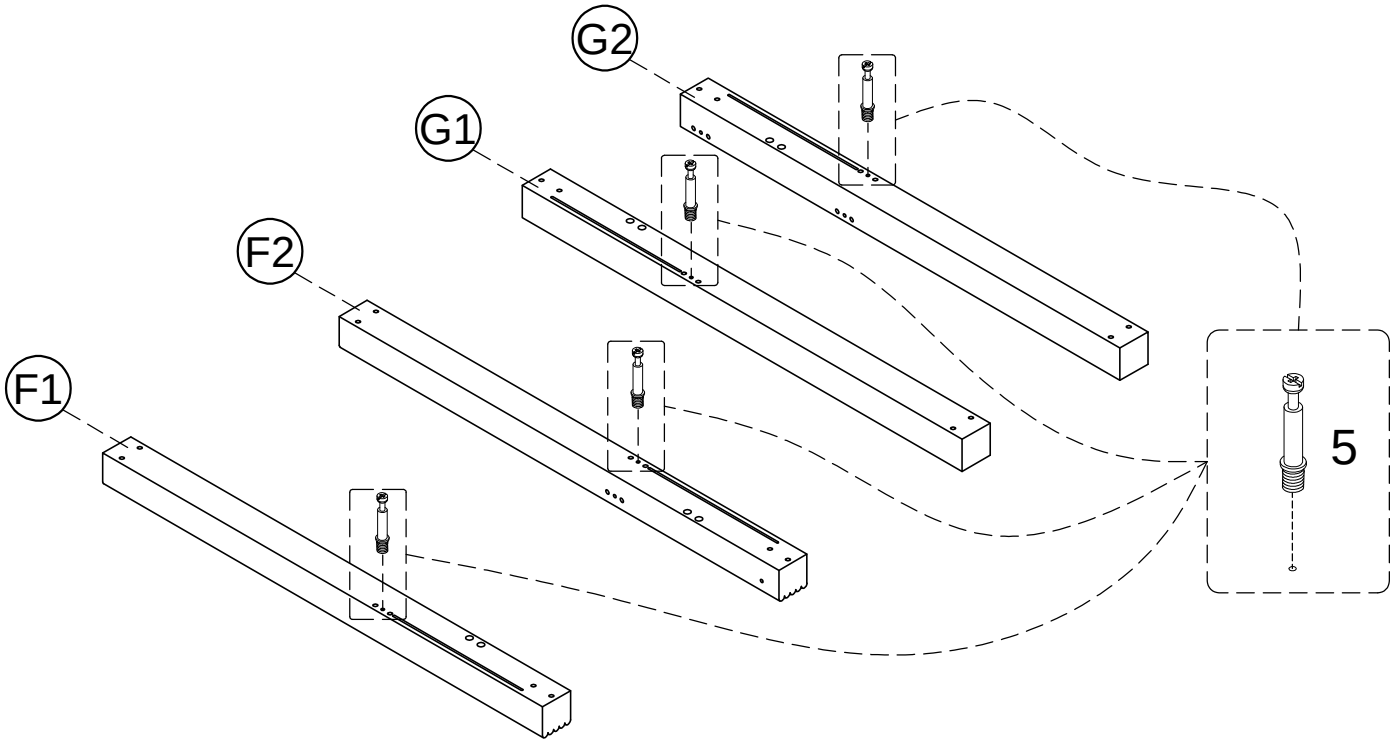

5	4PCS

STEP 3

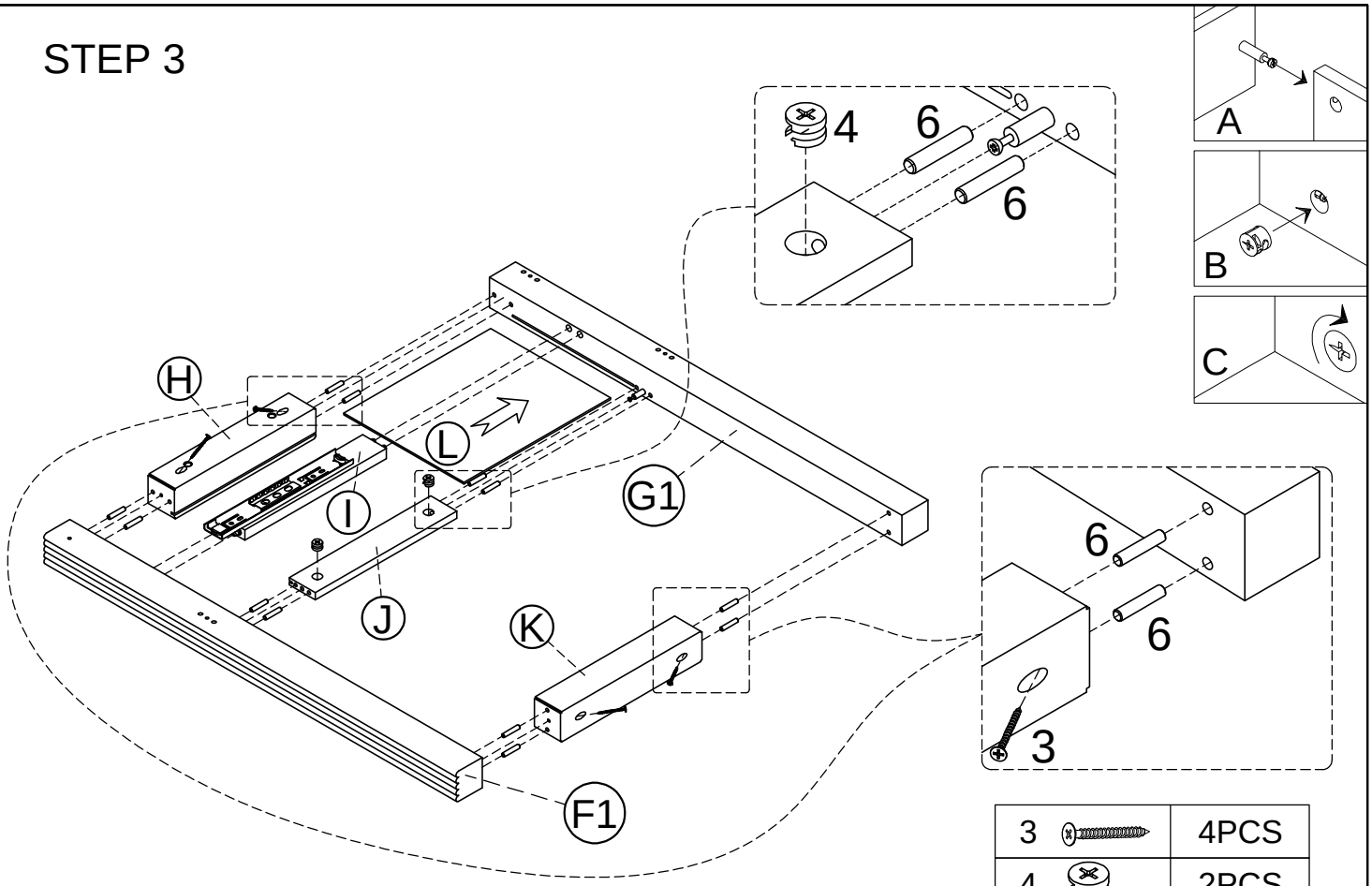

3	4PCS
4	2PCS
6	12PCS

STEP 4

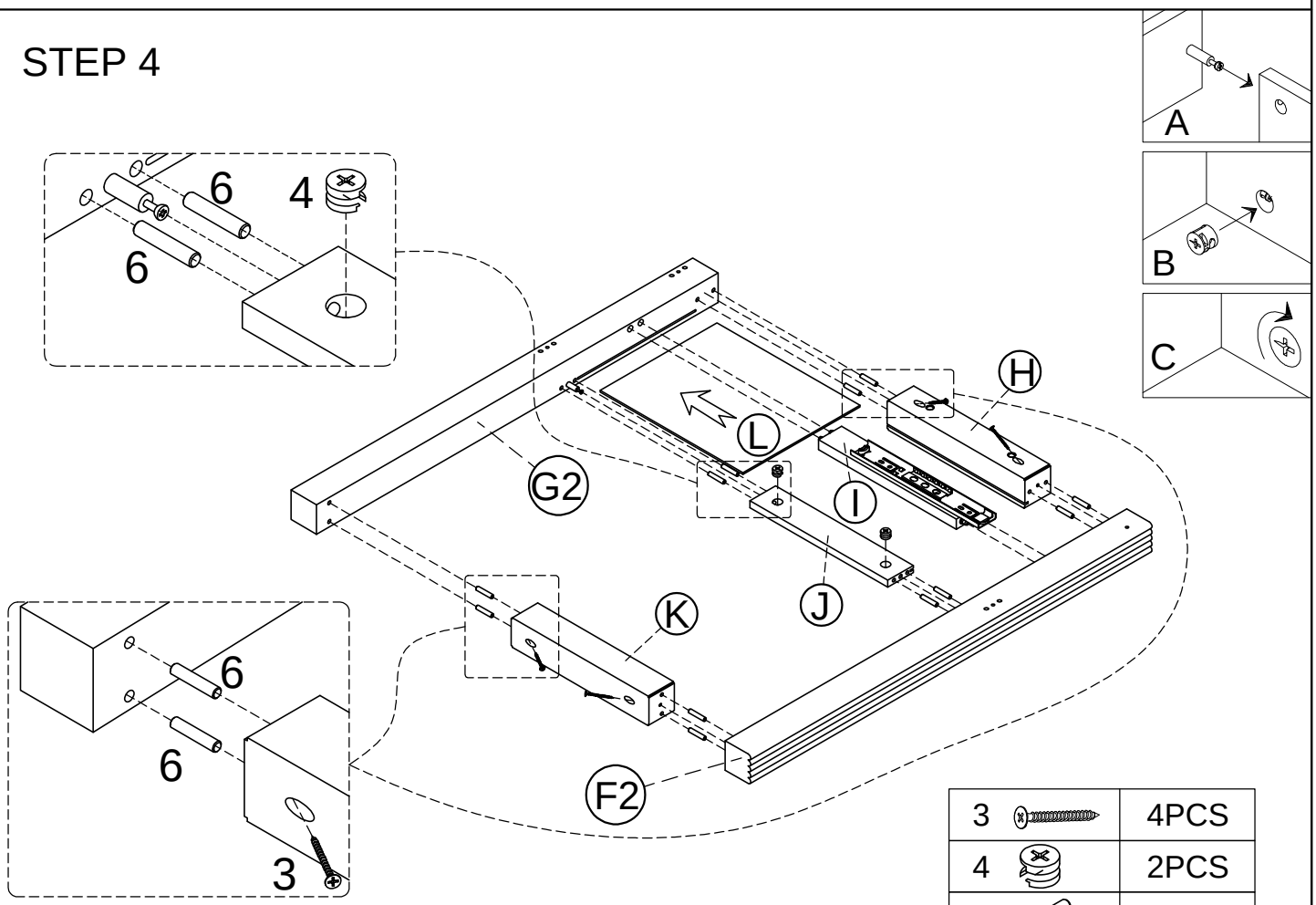

3	4PCS
4	2PCS
6	12PCS

STEP 5

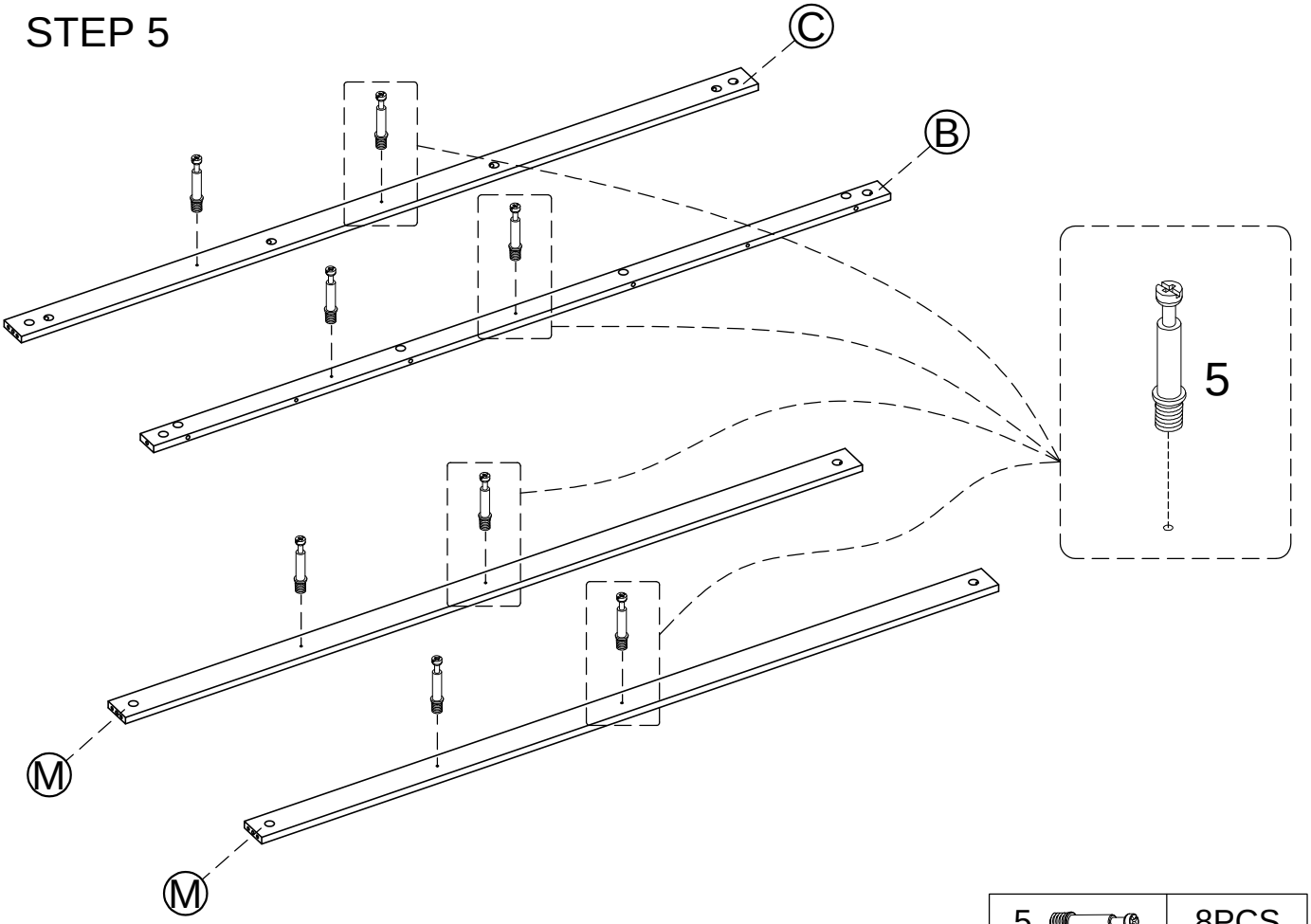

5	8PCS

STEP 6

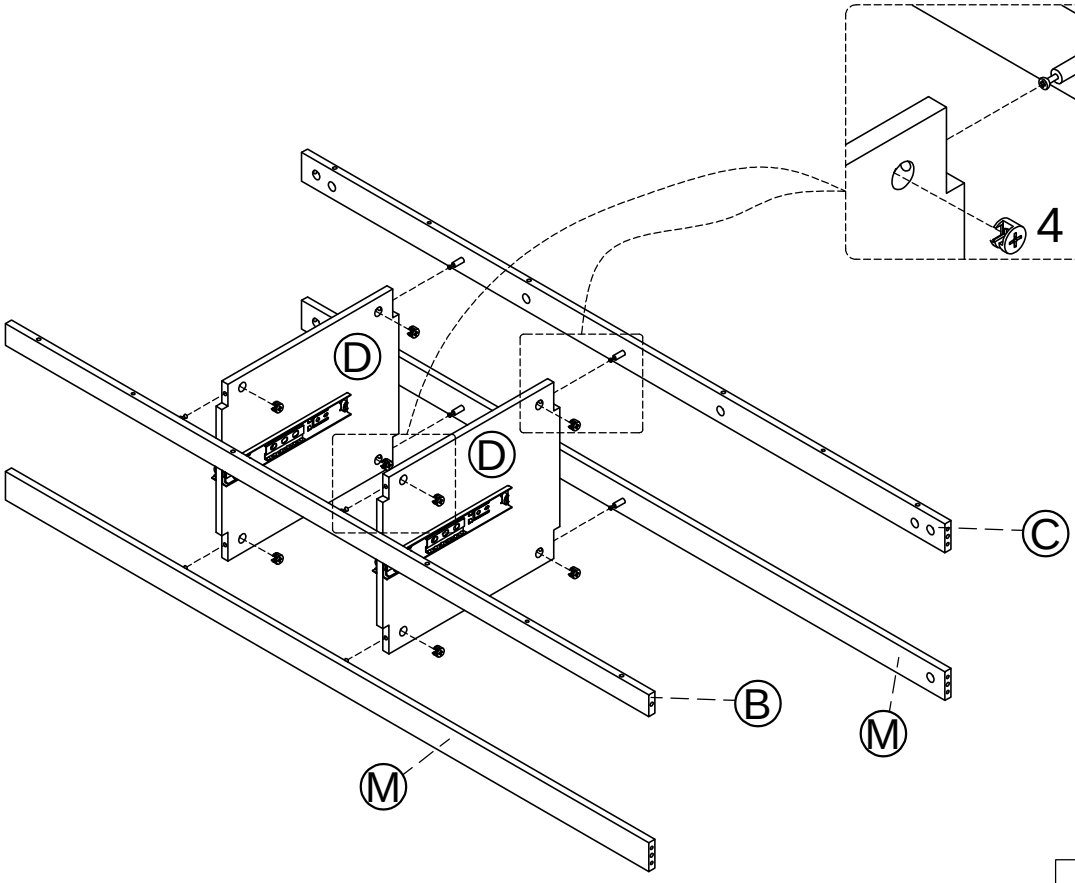

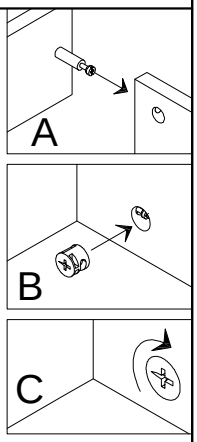

4	8PCS

STEP 7

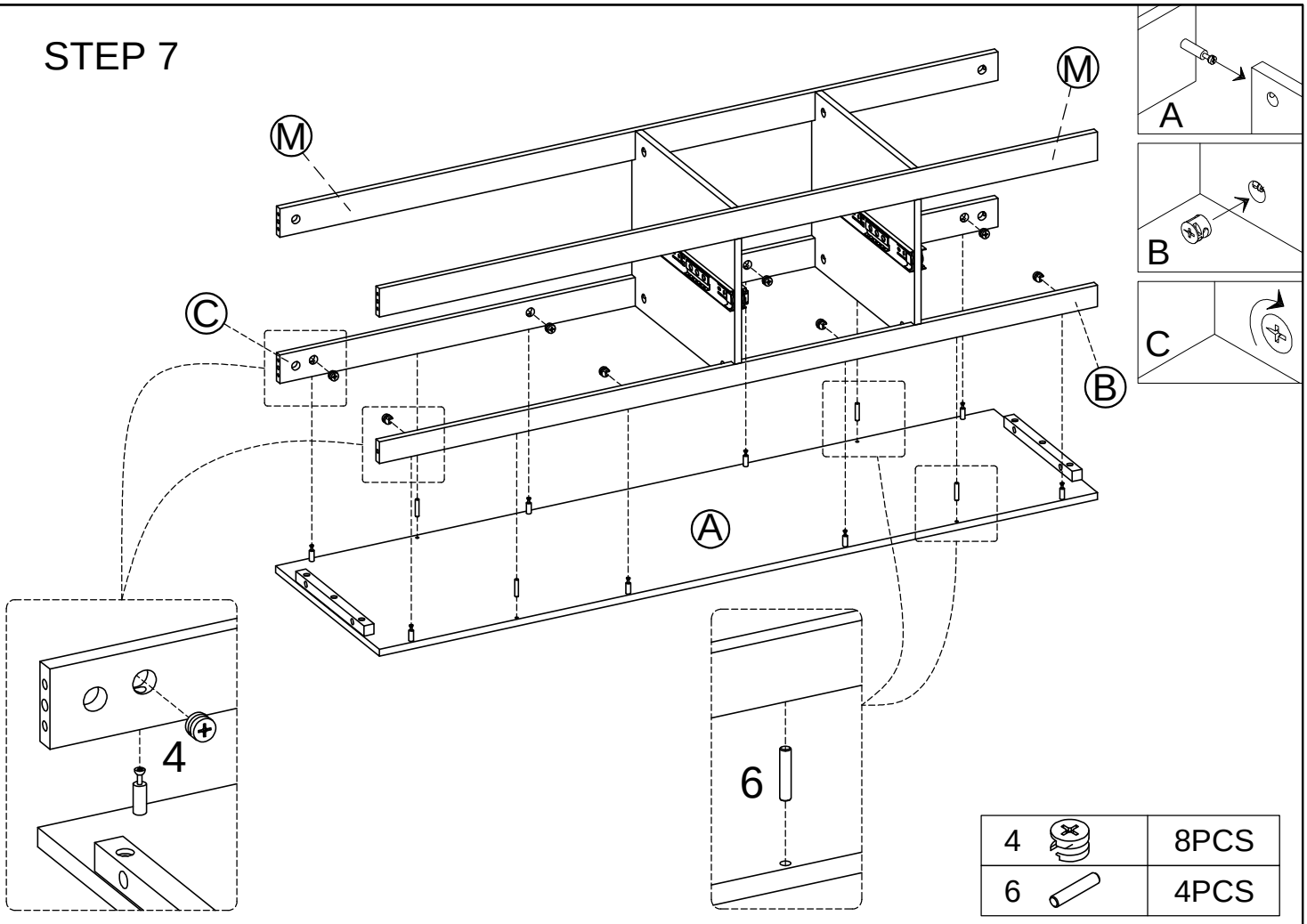

4	8PCS
6	4PCS

STEP 8

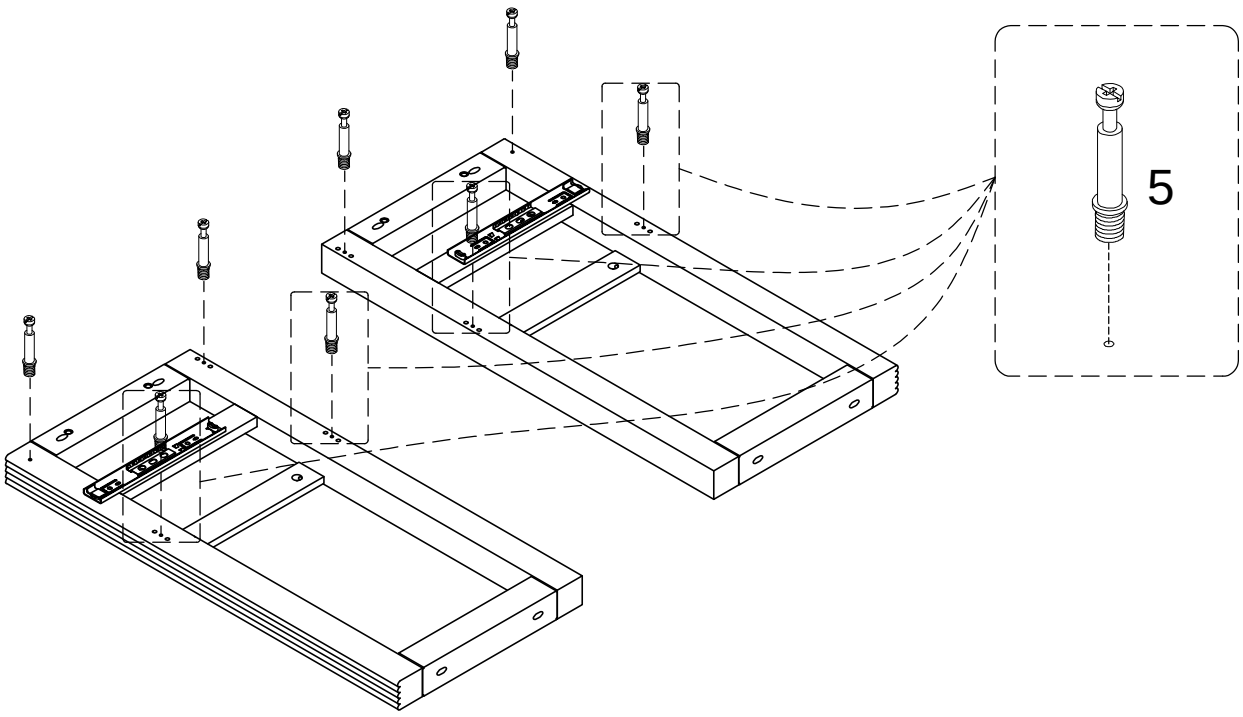

5	8PCS

STEP 9

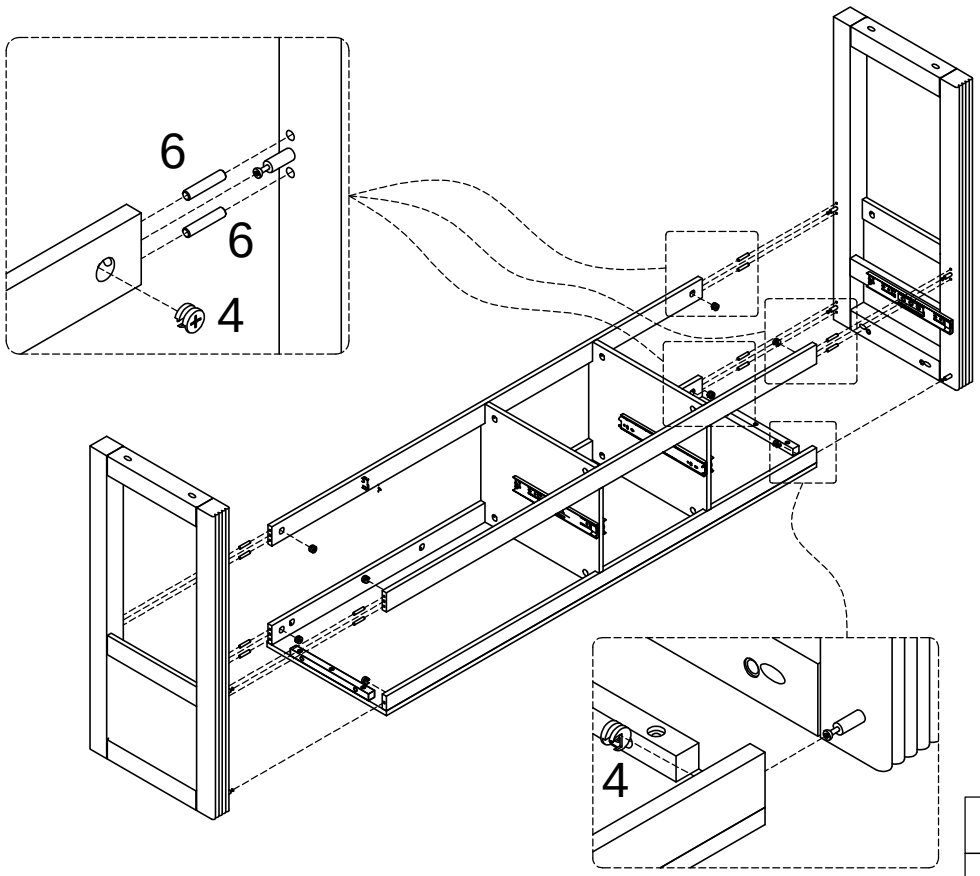

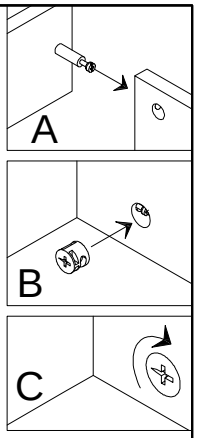

4	8PCS
6	12PCS

STEP 10

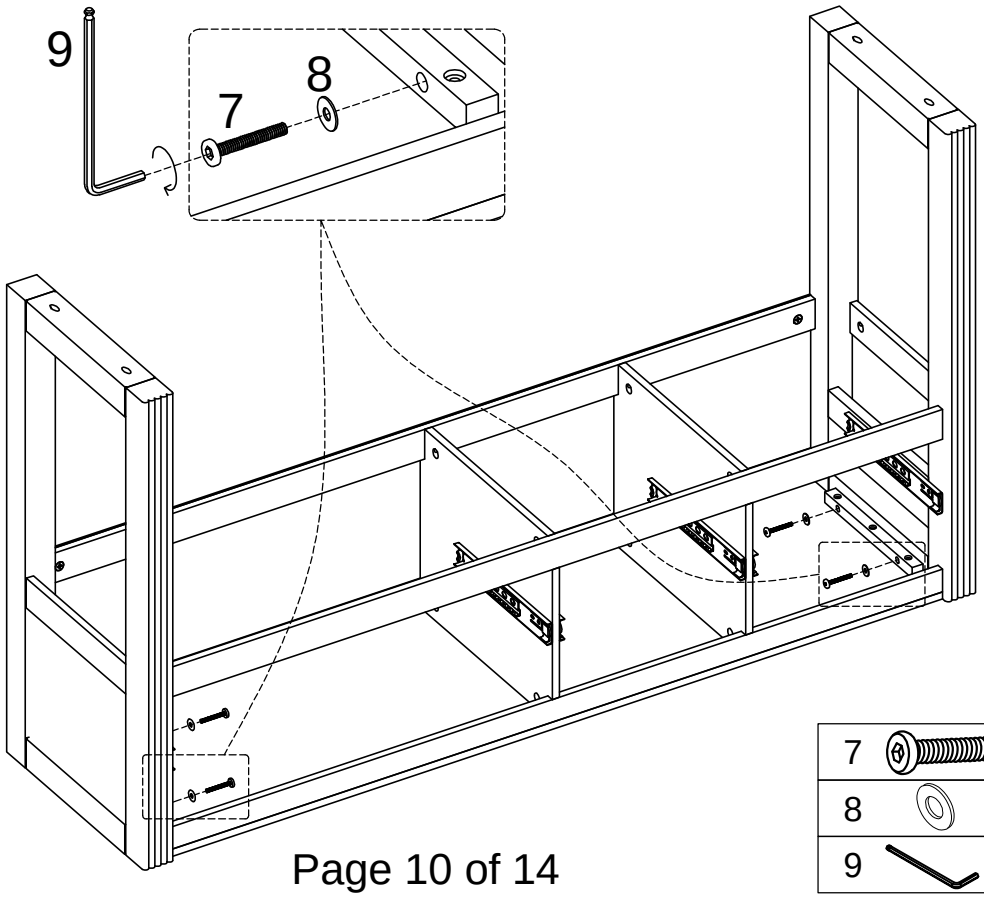

7	4PCS
8	4PCS
9	1PC

STEP 11

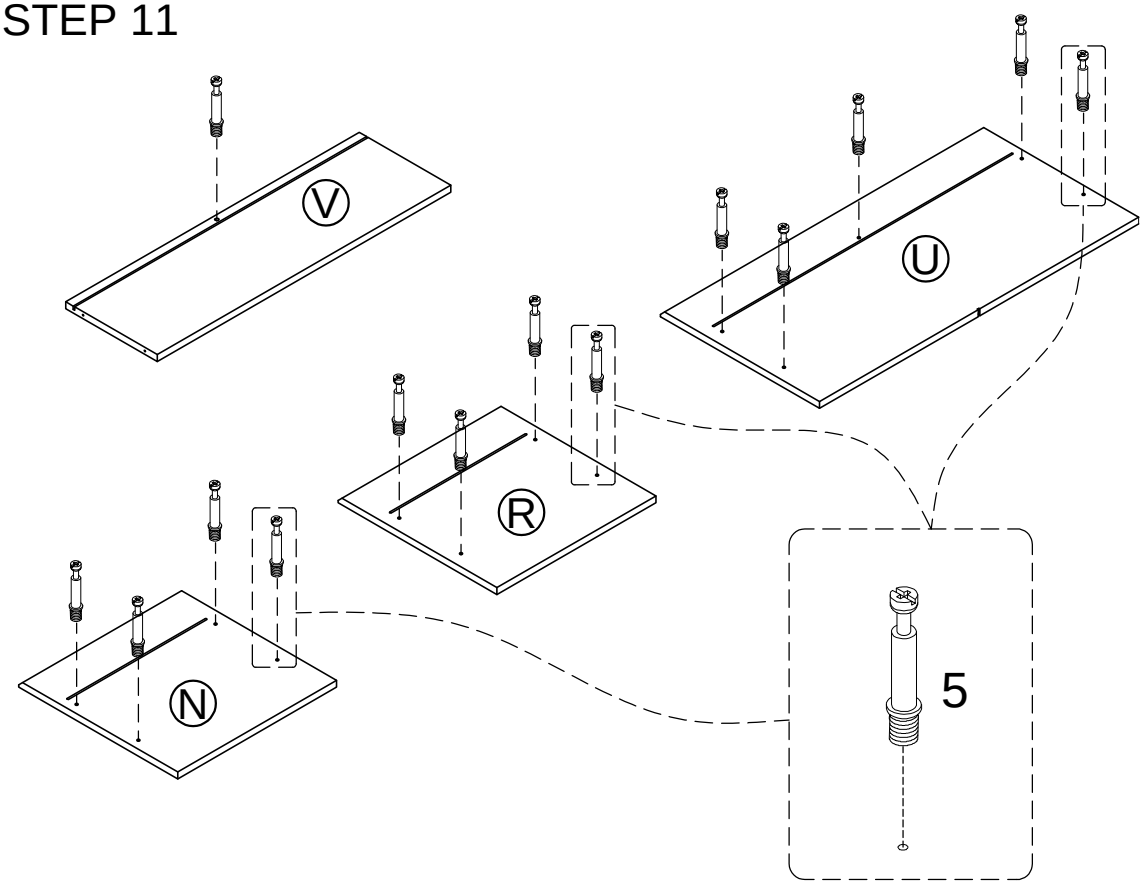

5	14PCS

STEP 12

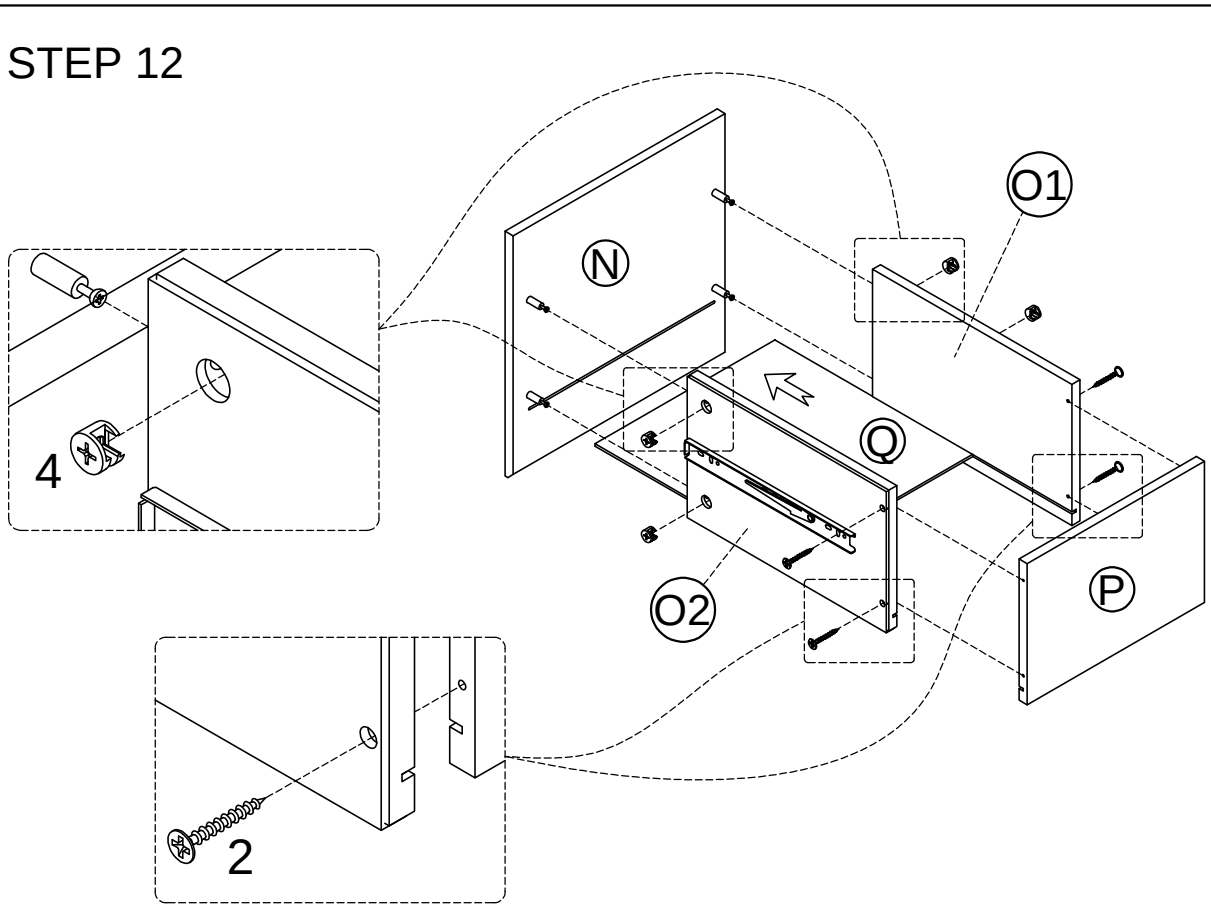

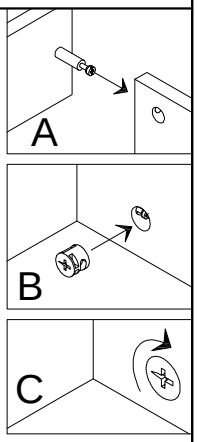

2	4PCS
4	4PCS

STEP 13

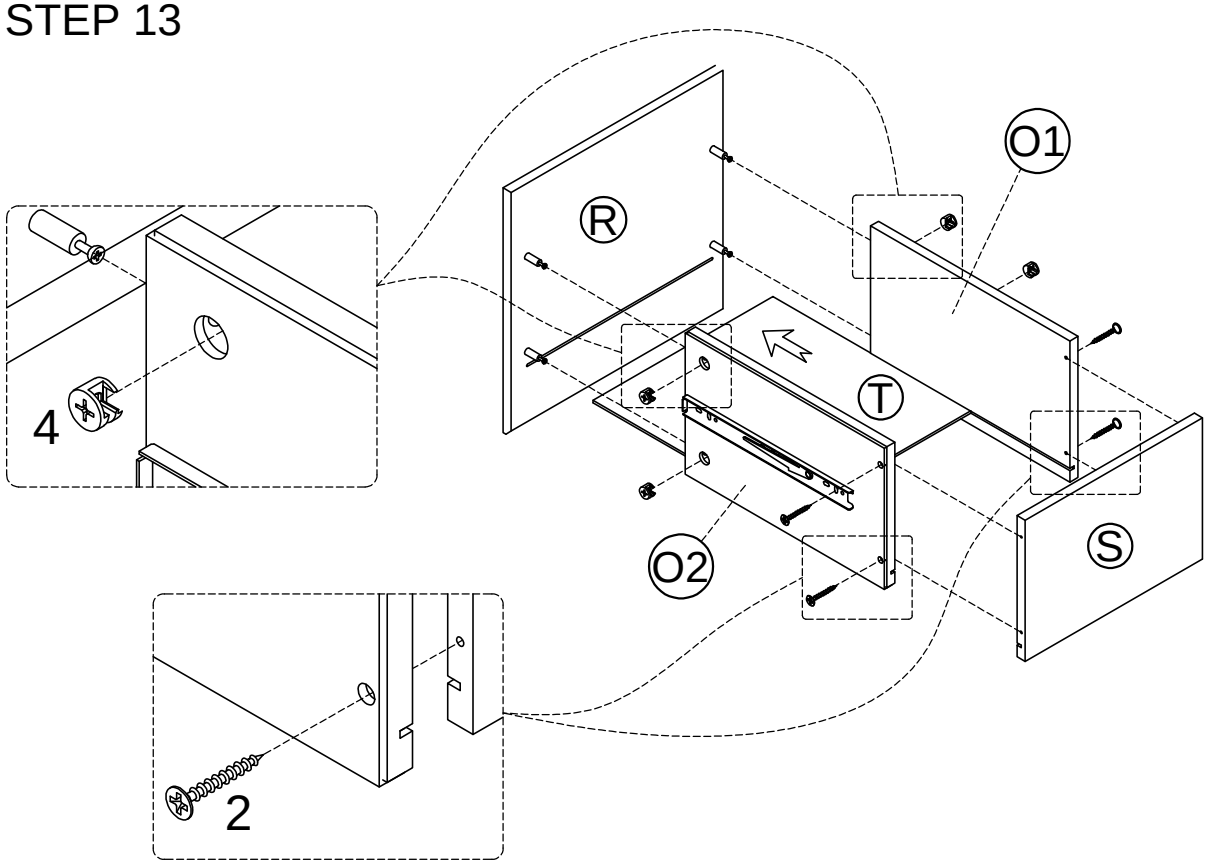

2		4PCS
4		4PCS

STEP 14

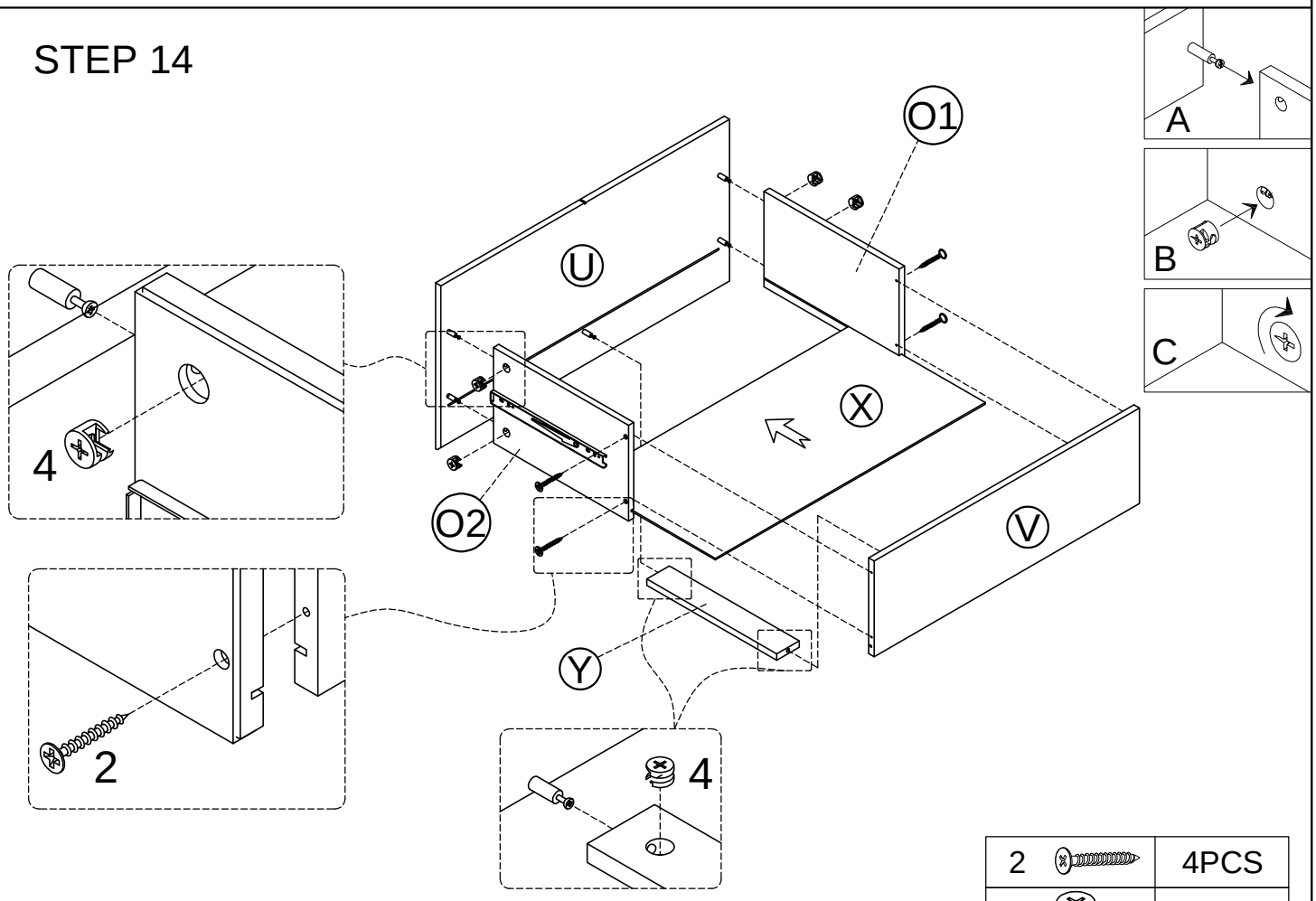

2		4PCS
4		6PCS

STEP 15

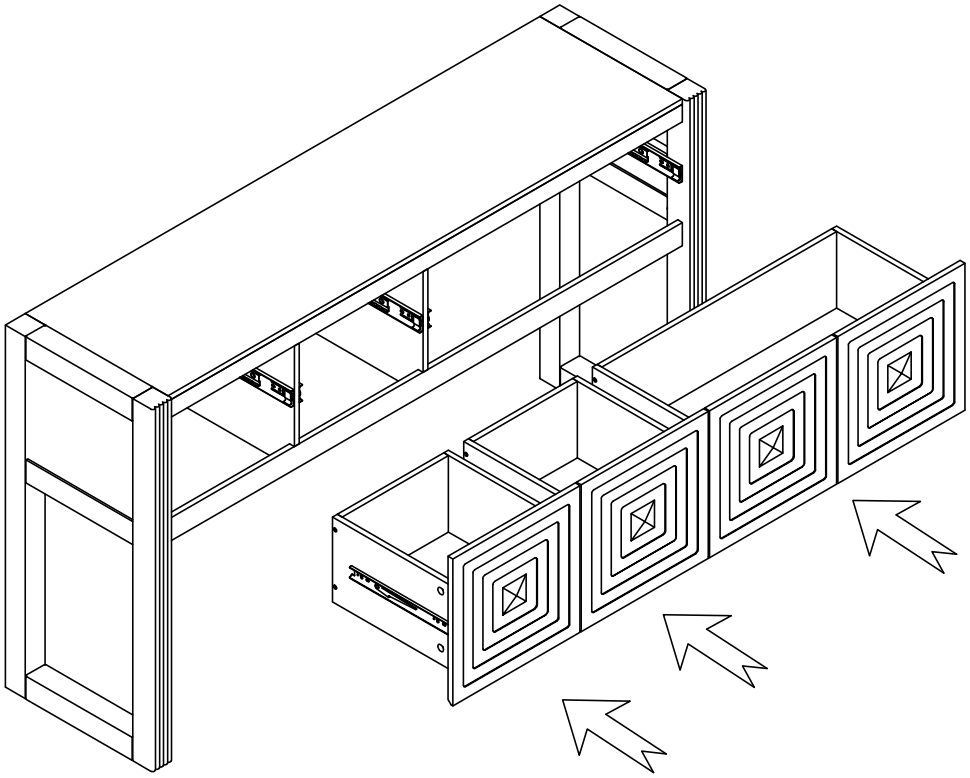

STEP 16

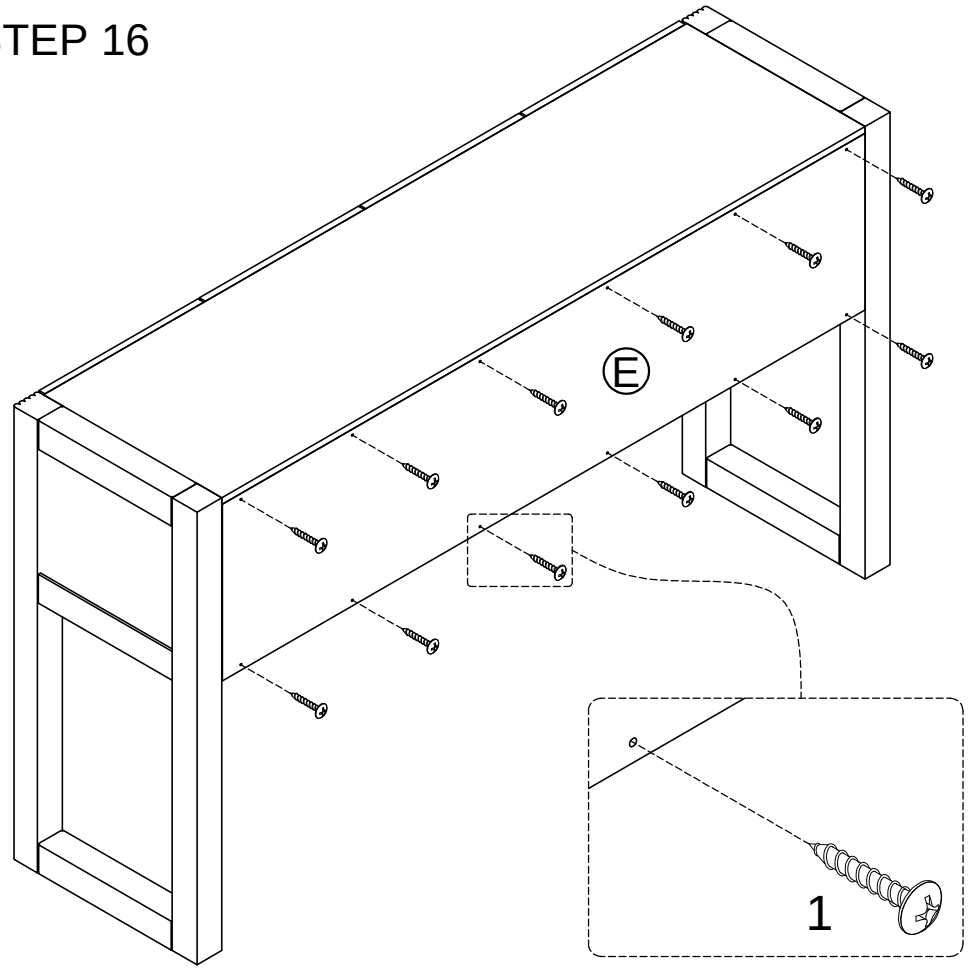

1 	12PCS

WARNING

Serious or fatal crushing injuries can occur from furniture tip-over.
If the furniture tip over restraint kit is not in the box, please contact our customer service department in order to obtain another kit before using the furniture.

A1		4	D1	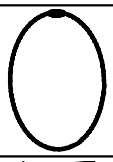	2
B1	 M4 X 20mm	2			
C1	 M4 X 40mm	2	E1	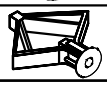	2

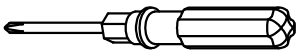

NOTE: The screwdriver is not included in the hardware pack.

