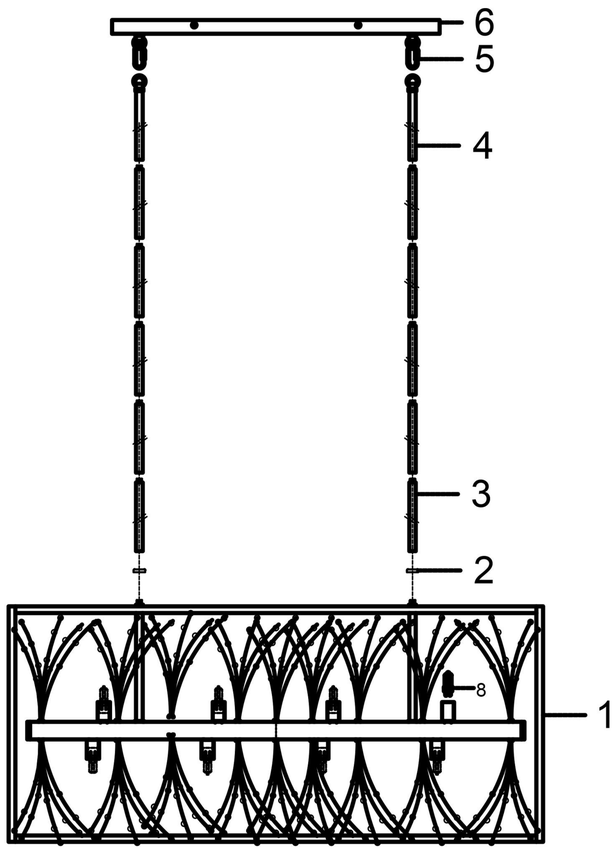

1. Put the nut（2）through the tooth tube, twist the rod (3) (4) on the lamp body (choose the length you want), and then connect the lamp body (1) with the canopy (6) with the lock buckle (5).

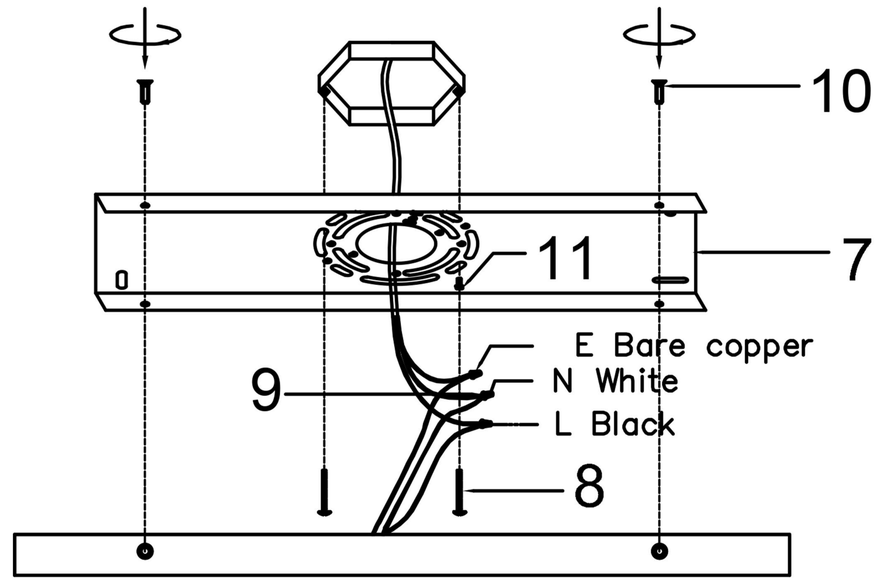

2. Remove the mounting plate (7) from the lamp body and install the mounting plate on the junction box with screws (8).
3. Connect the outlet cable of the junction box to the outlet cable of the lamp body using a wiring cap (9).
4. Tighten the mounting plate and the top plate of the lamp body with screws (10).

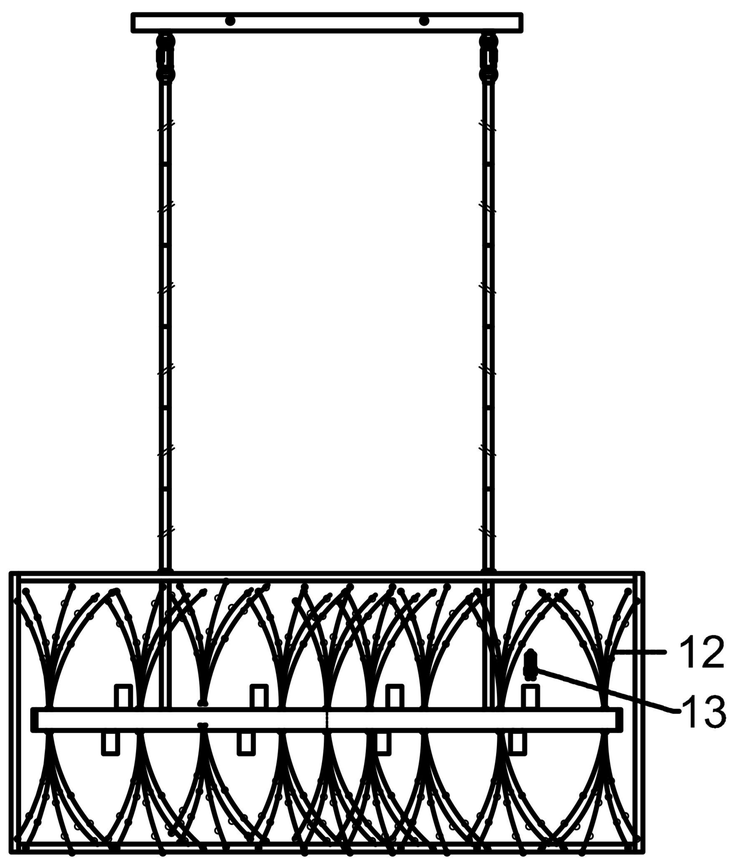

5. Twist the crystal flower (12) on the lamp body, and then install the bulbs(excluding the bulbs).

Accessories：

1:lamp body*1	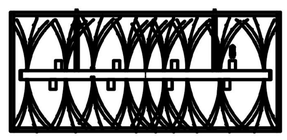
2:Nut*2	
3:Rod*10	
4:Rod+Universal joint*2	
5:Buckle*2	
6:Canopy*1	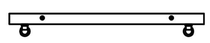
7:Mounting Plate*1	
8:Screws*2	
9:Wiring Cap*3	
10:Screws*4	
11:Screws*1	
12:Crystal Flower*83	

Notice： This light fixture should be installed in accordance with all applicable,local installation codes, and by a person familiar with the construction and operation of it, as well as the hazards involved. Inspect items and contents carefully. If any damage or defect is found, do not install it.