CHANDELIER

INSTRUCTIONS PERTAINING TO RISK OF FIRE OR INJURY TO PERSONS
READ ALL INSTRUCTIONS

IMPORTANT SAFETY INSTRUCTIONS
SAVE THESE INSTRUCTIONS

TOOLS AND MATERIALS REQUIRED:


Phillips Screwdriver


Wire Cutters

Wiring supplies as required by the Canadian Electrical Code and/or the Quebec Electrical code


Pliers


Wrench

SAFETY PRECAUTIONS:

1. **TURN OFF ELECTRICAL POWER BEFORE STARTING INSTALLATION OF LIGHT FIXTURE.**
2. **THIS PRODUCT MUST BE INSTALLED IN ACCORDANCE WITH THE APPLICABLE INSTALLATION CODE BY A PERSON FAMILIAR WITH THE CONSTRUCTION AND OPERATION OF THE PRODUCT AND THE HAZARDS INVOLVED.**
3. **CONNECT THE GROUND WIRES (BARE COPPER OR GREEN) FROM YOUR FIXTURE TO THE GROUND WIRE (BARE COPPER OR GREEN) OR GROUND SCREW IN THE ELECTRICAL BOX.**

NOTE: Product May Not Look Exactly As Shown In Figures.

INSTALLATION:

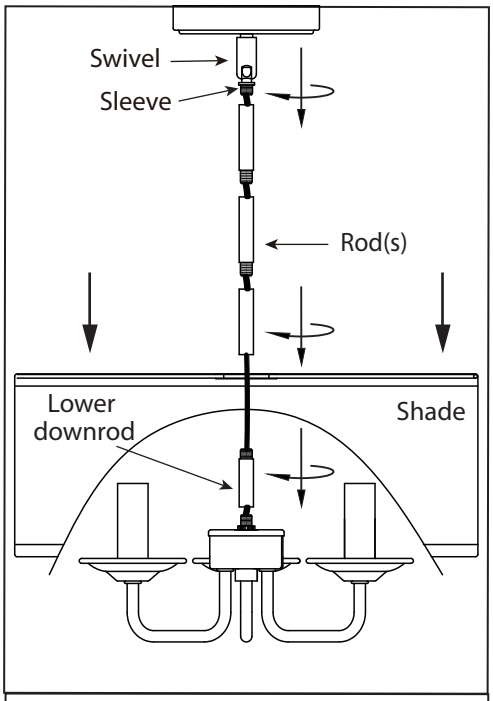

1. Screw the lower downrod to the fixture. Position the shade in place.

2. Install the length of rod that is required by threading wire through the rod and screwing it to the fixture. Install swivel to the rod, ensuring that the sleeve is at the swivel.

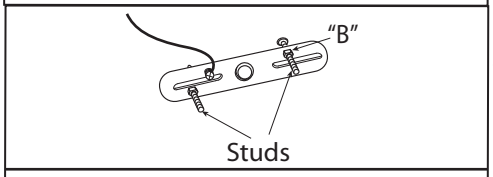

3. Loosen "B". Adjust stud to desired length and lock in place with "B".

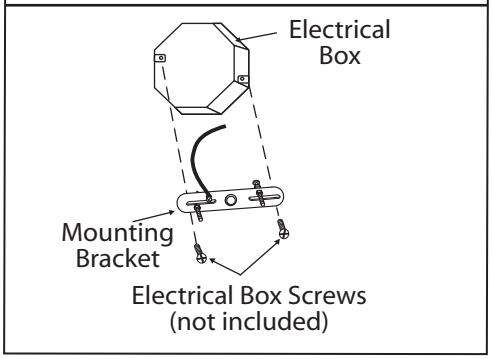

4. Mount the mounting bracket to electrical box using electrical box screws (not included). Make sure the studs on the mounting bracket are facing out from the electrical box.

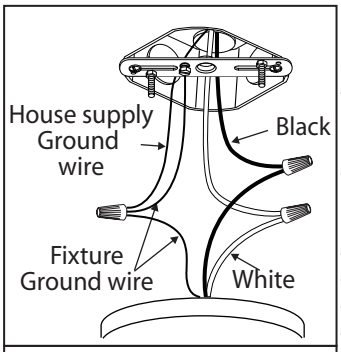

5. Connect the ground wires (bare copper or green) from your fixture to the ground wire (bare copper or green) or ground screw in the electrical box. Attach the black wire (or wire marked "SPT-1") from the light fixture to the black wire in the electrical box. Attach the white wire from the light fixture to the white wire in the electrical box.

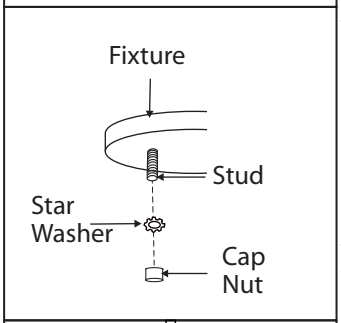

6. Once connections of wires are completed, carefully tuck wires and wire nuts into the outlet box making sure no bare wire (on the black and white) is visible at the wire nuts.

7. Tuck electrical wires into outlet box and position fixture over studs on mounting bracket assembly. Secure fixture in place with star washer(s) and cap nut(s).

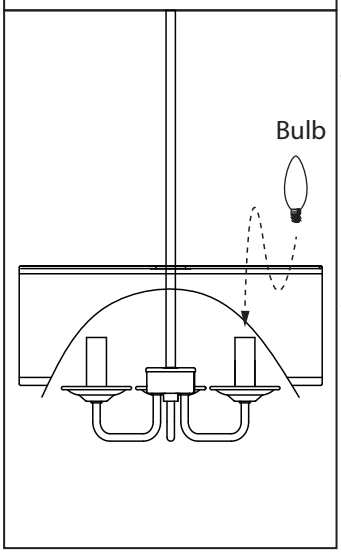

8. Install specified bulb type and wattage (not included).