Elevate Suite

General Specifications

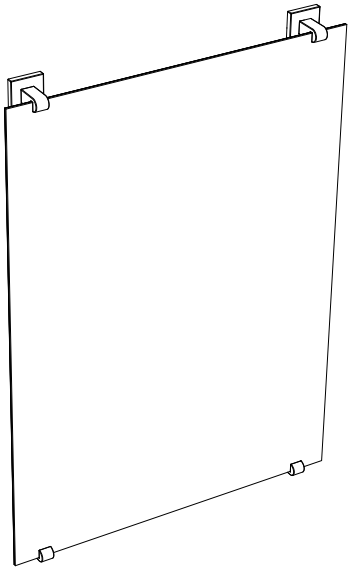

Minimalist Mirror

#1595 (Chrome)
#1596 (Satin Nickel)

#1595MX (Matte Black)

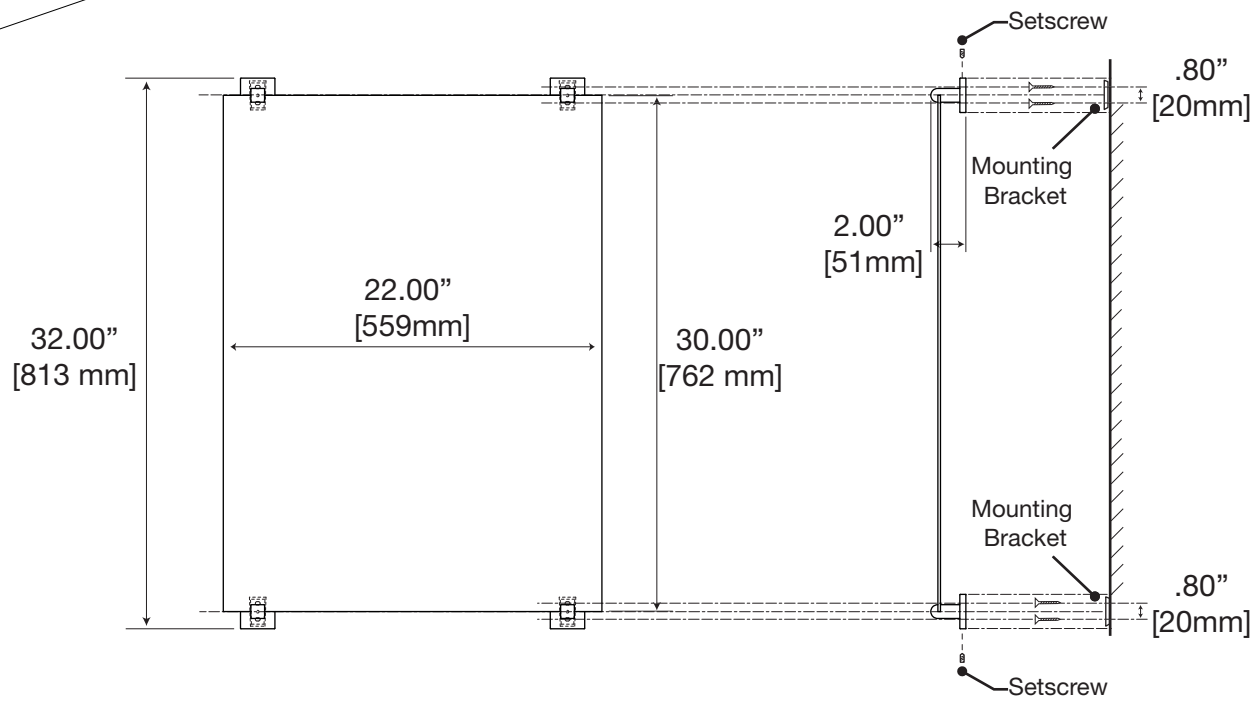

The manufacturer reserves the right to, and do time to time, make changes and improvements in designs and dimensions.

Updated on December 18, 2013