ARMCHAIR & OTTOMAN

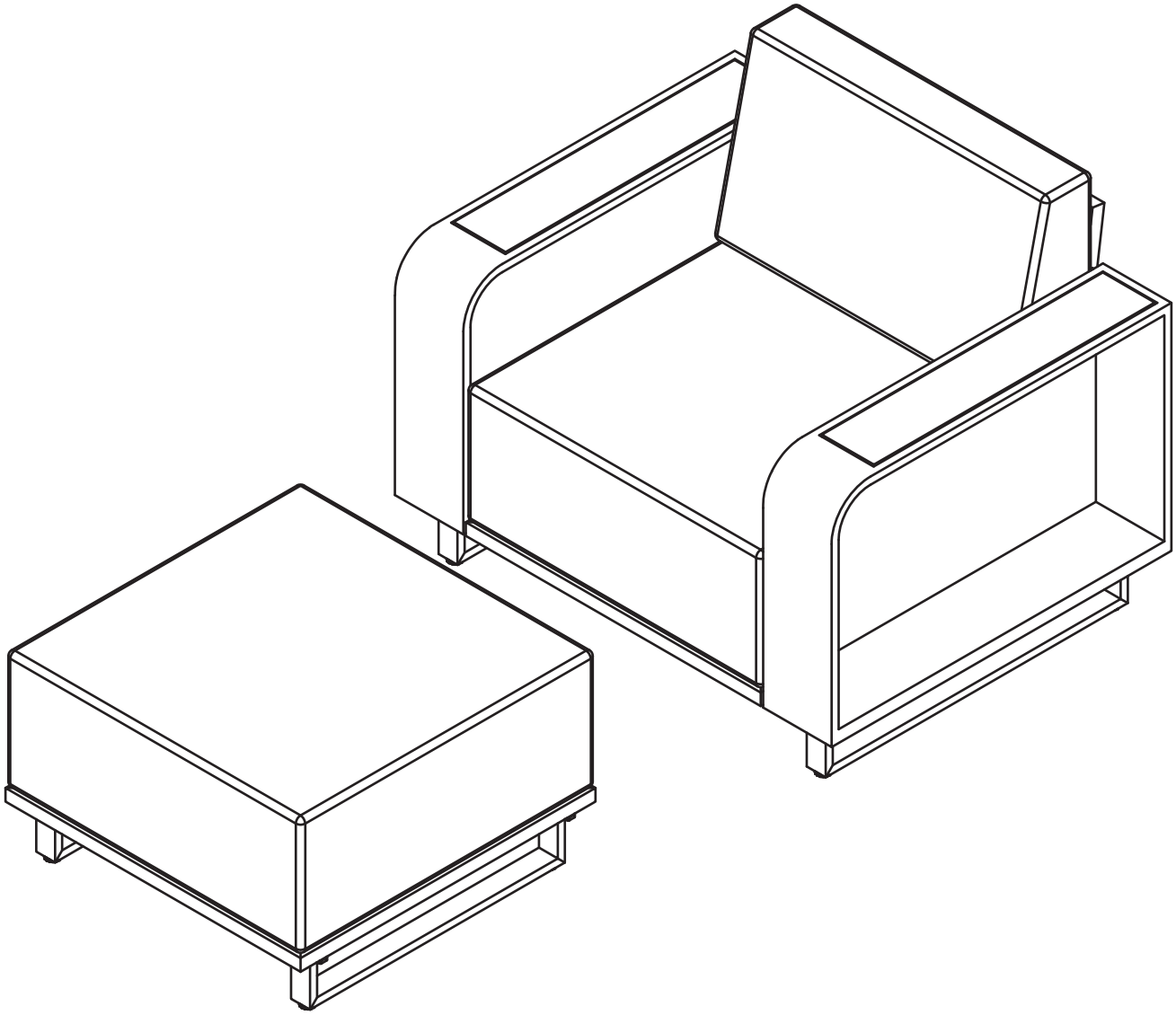

If you need help or find any damaged or missing parts, please don't worry — feel free to contact us through the platform. We're here for you.

AFTER-SALE

Dear Valued Customer,
Thank you for choosing this product.

Every product undergoes strict quality inspection and careful packaging before shipment. However, unexpected issues may occasionally occur during logistics transportation. Please do not worry if you encounter any of the following situations:

- Dented, broken or damaged product and outer packaging after delivery
- Missing accessories or parts when unboxing the package
- Product malfunctions, operational questions or functional abnormalities during use

Two Official Channels to Contact Us for Support

1. Order Backend Message

Send us a message directly through your order page, attach clear real photos of the problem along with your order number.

2. Patiofurnitureserviceteam@outlook.com

Email us with your order number and relevant photos of the problem for prompt follow-up.
Processing Time Promise:

We will reply and resolve your issue within 24 hours upon receiving your message via either of the above two contact methods.

Once we receive your message, we will check your issue without delay, provide proper solutions wholeheartedly, safeguard your shopping rights and bring you a reassuring and pleasant purchasing experience.

Patiofurnitureserviceteam@outlook.com

PART LIST

A 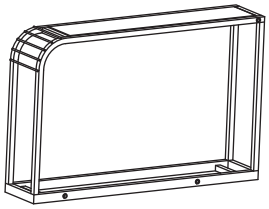 x 1	A1 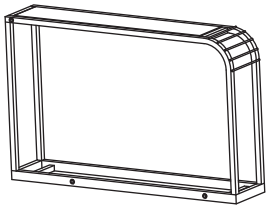 x 1	B 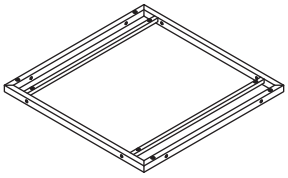 x 1	C 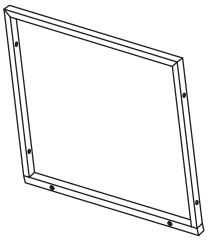 x 1
E LONG x 2	F 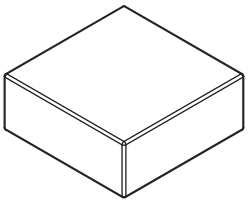 x 1	G 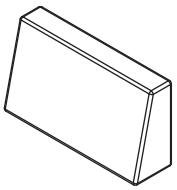 x 1	

1 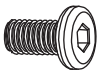 M6X12 MM x 8	2 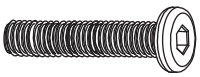 M6X40 MM x 8	3 M6 x 16	6 x 1

STEP

01

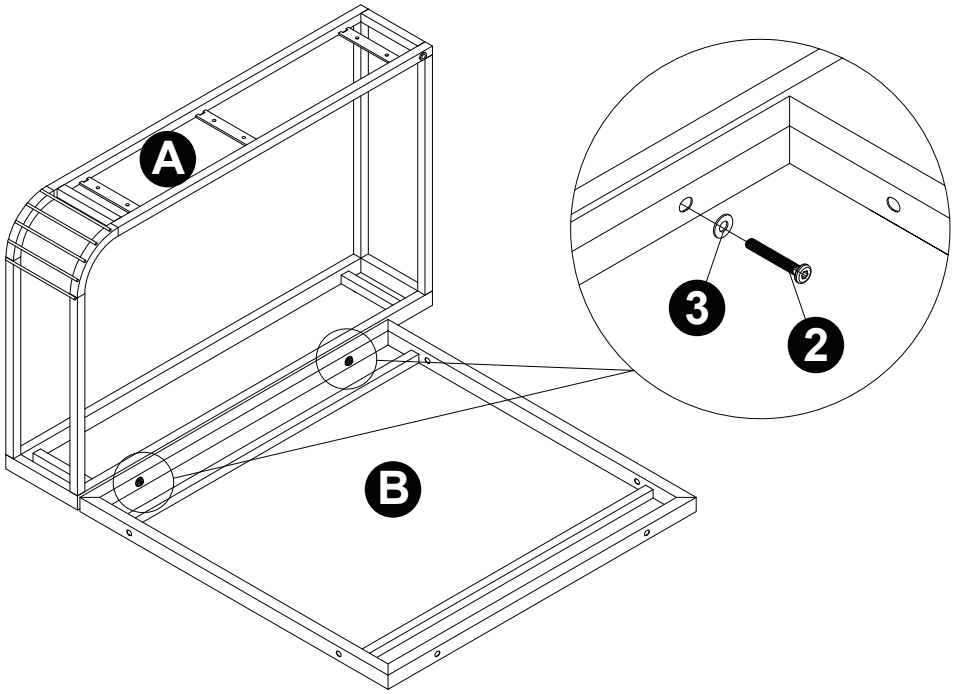

2

M6*40MM
2PCS

3

M6
2PCS

6

1PC

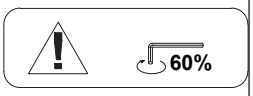

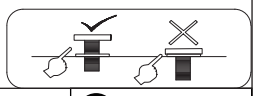

02

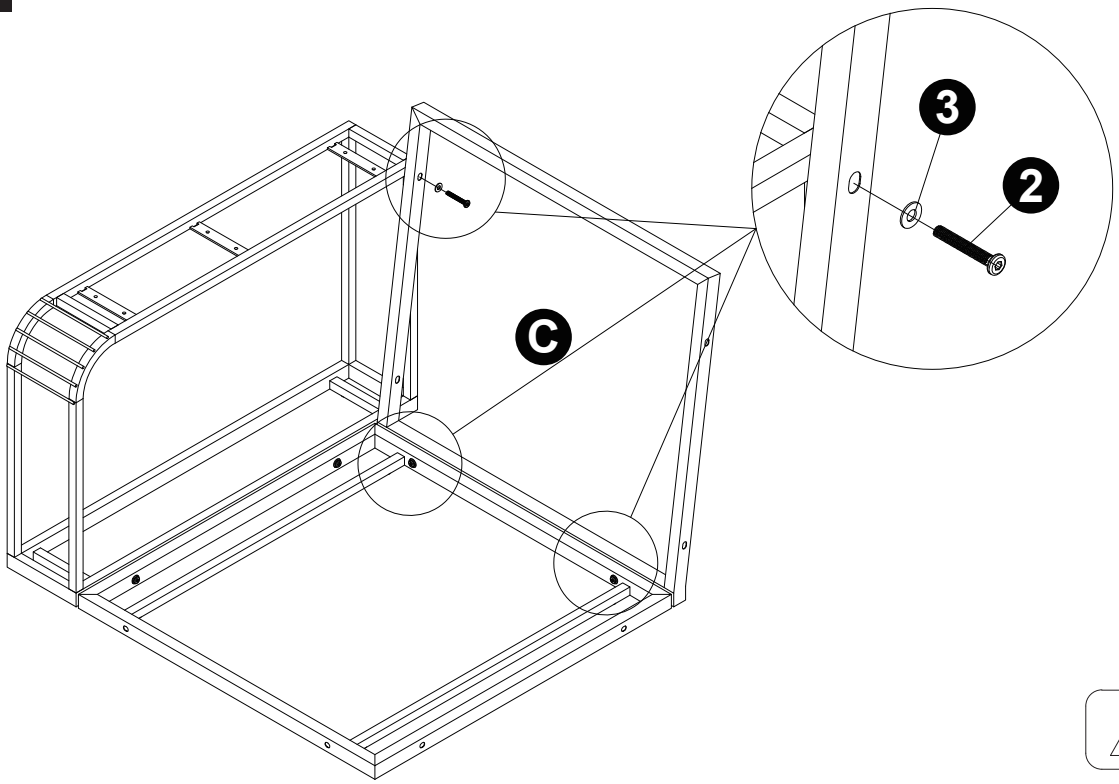

2

M6*40MM
3PCS

3

M6
3PCS

6

1PC

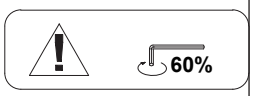

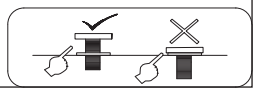

03

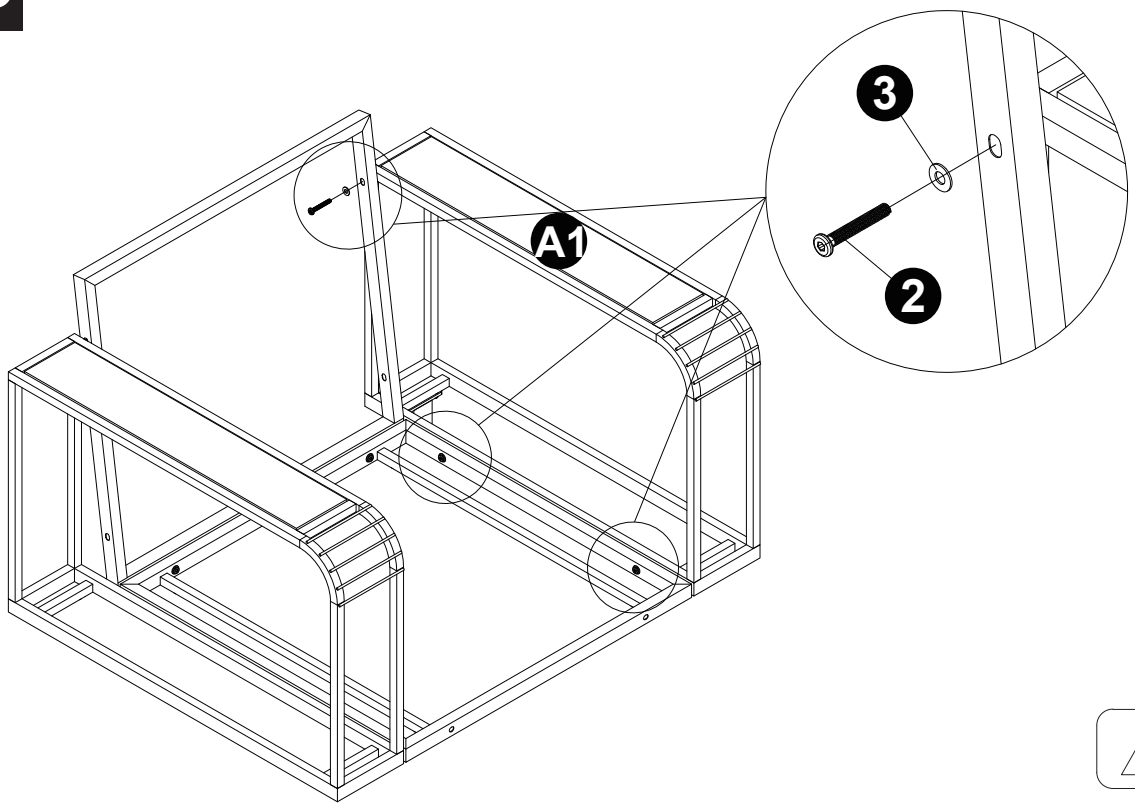

2 M6*40MM 3PCS

3 M6 3PCS

6 1PC

60%

04

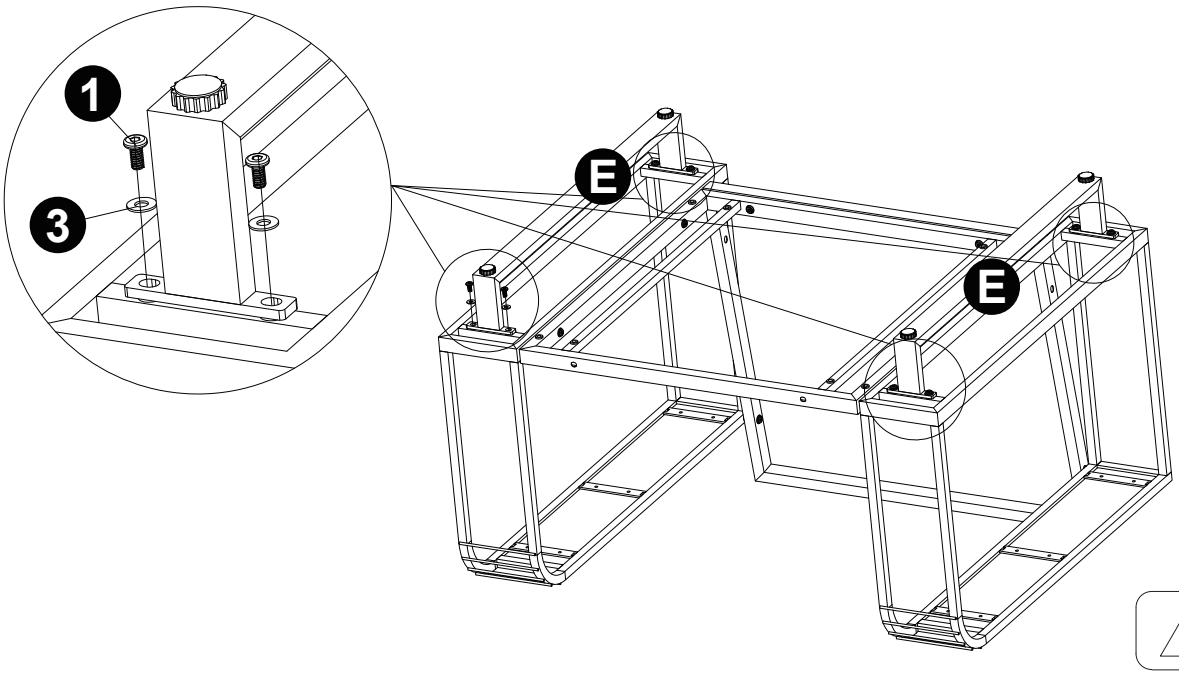

1 M6*12MM 8PCS

3 M6 8PCS

6 1PC

100%

05

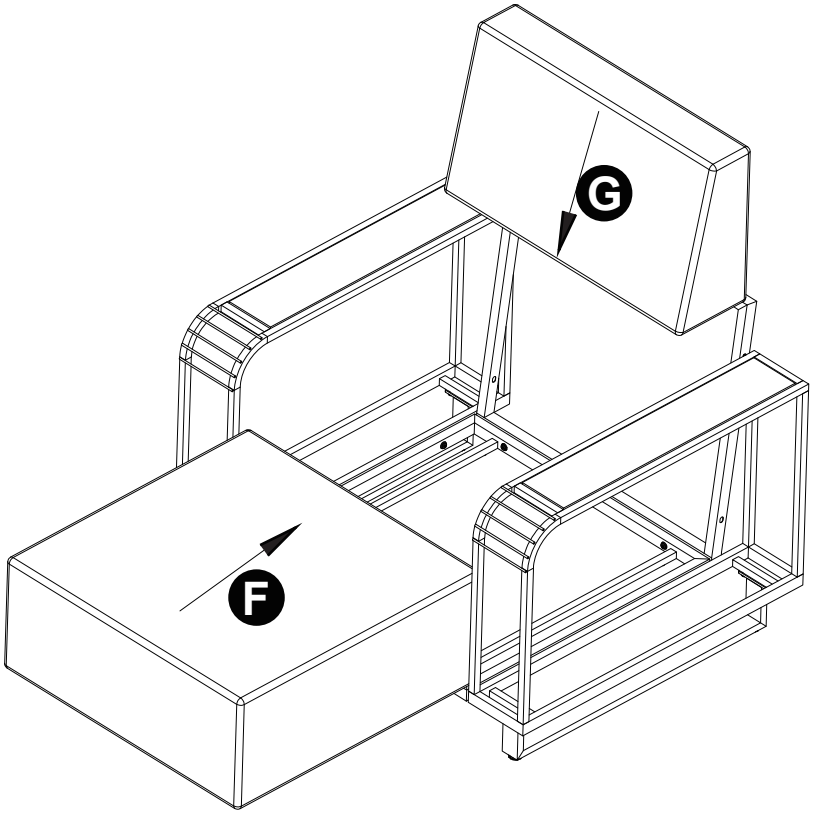

06

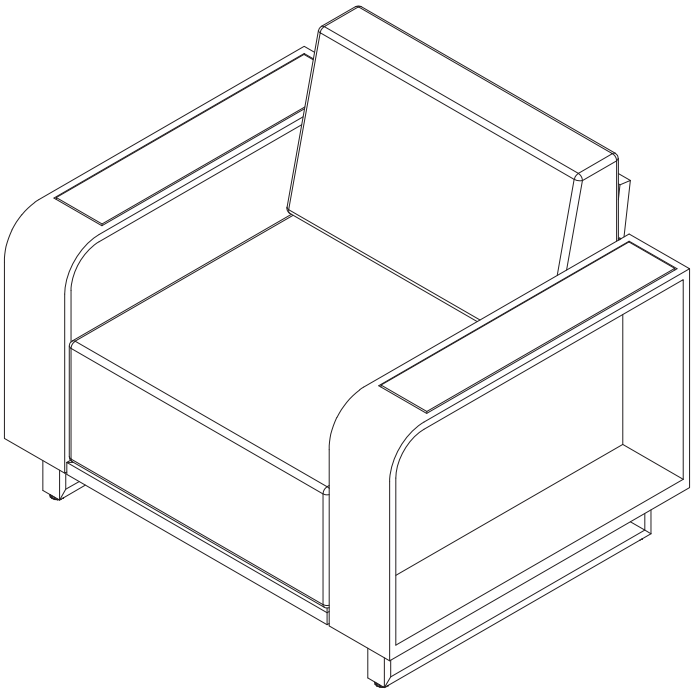

PART LIST

D SHORT x 2	F 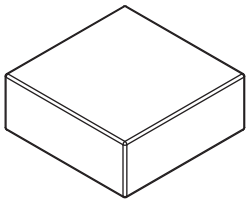 x 1	H 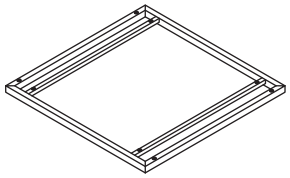 x 1

1 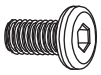 M6X12 MM x 8	3 M6 x 8	6 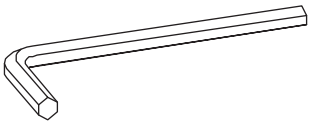 x 1

01

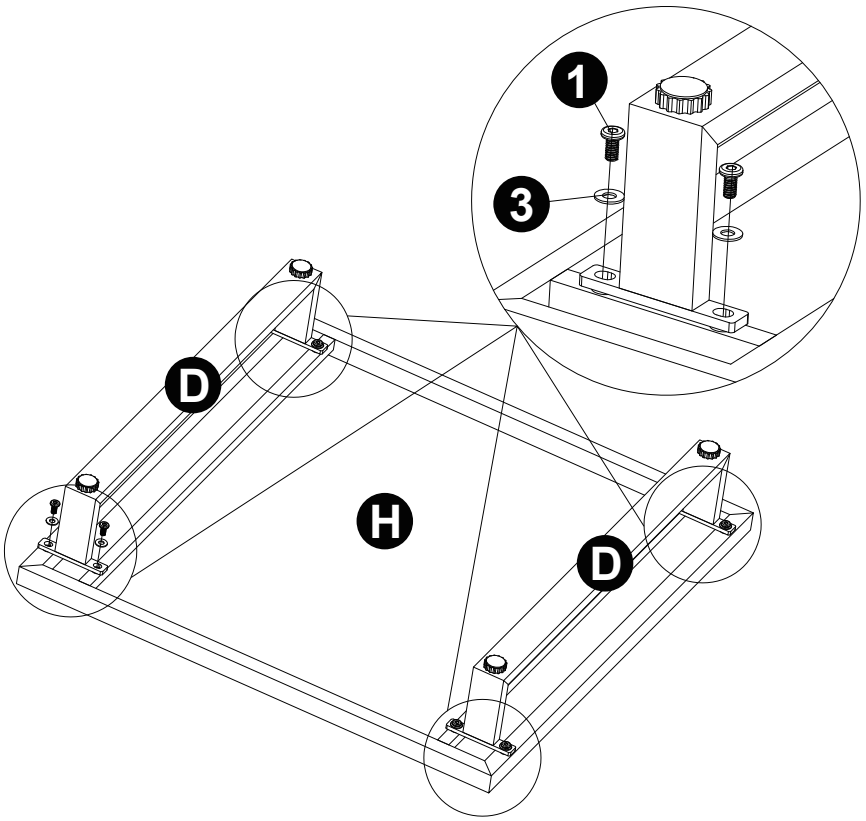

1
M6*12MM
8PCS

3
M6
8PCS

6
1PC

100%
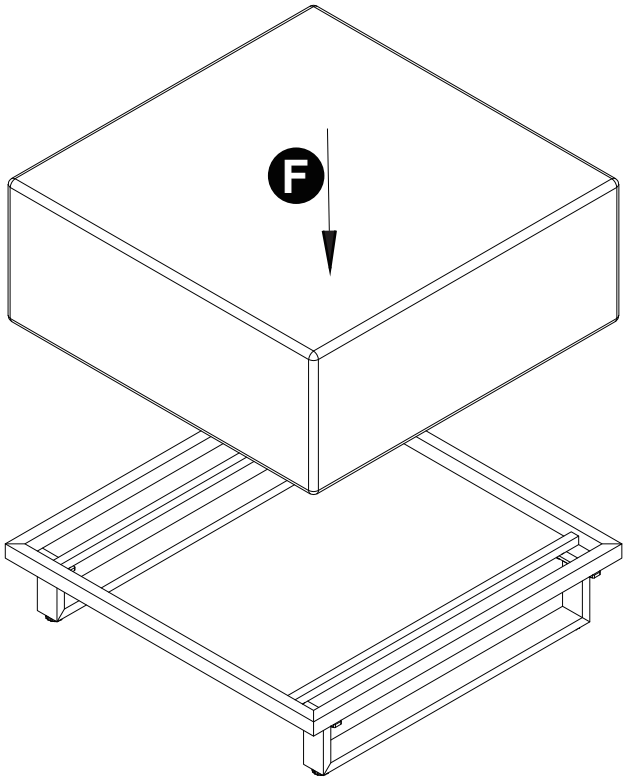
02