Product Installation Instructions

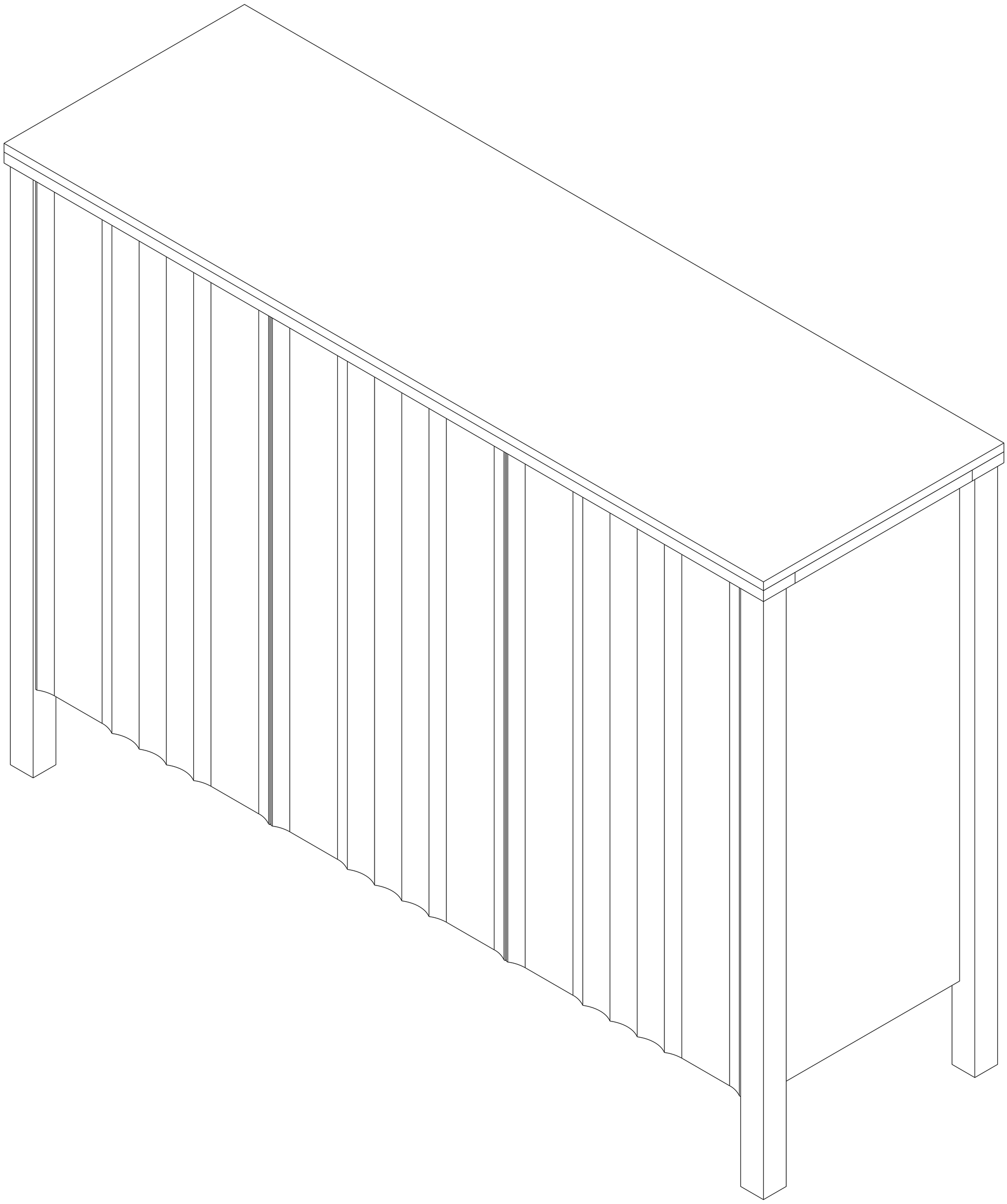

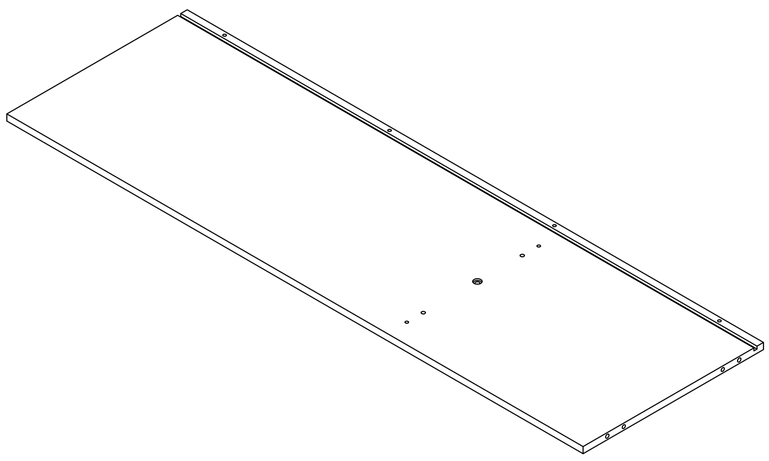

Ax1

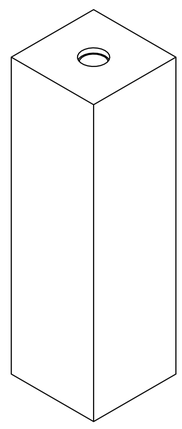

Bx1

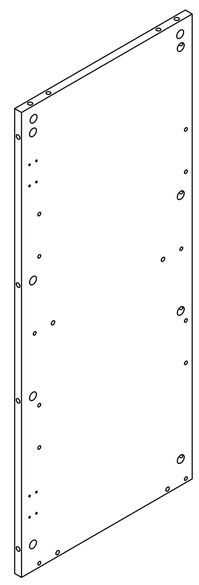

Cx1

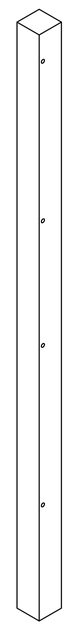

Dx1

Ex1

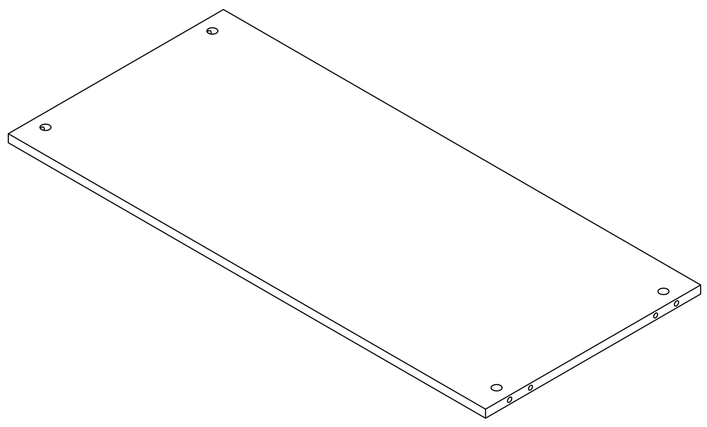

Fx1

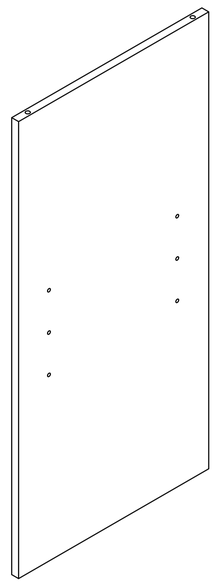

Gx1

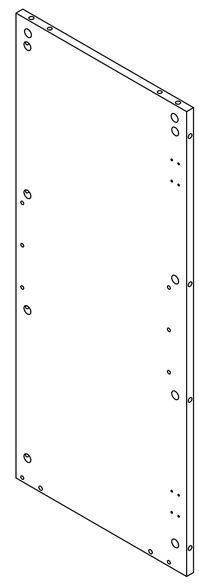

Hx1

Ix1

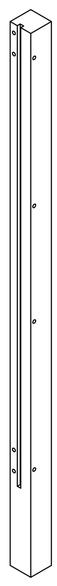

Jx1

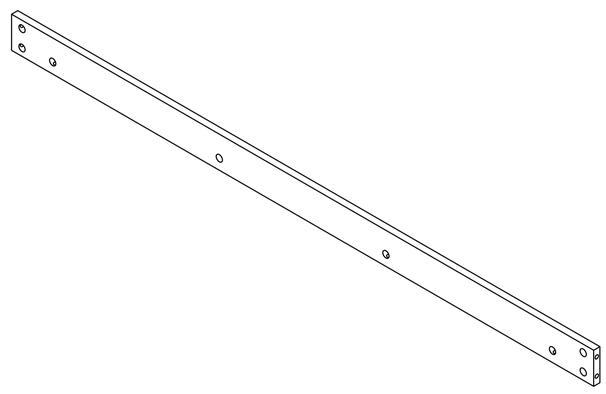

Kx2

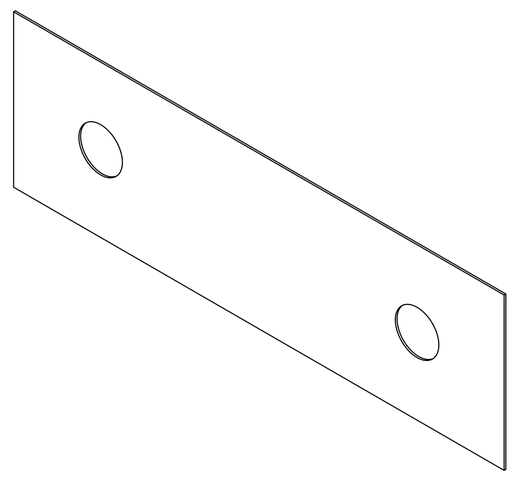

Lx2

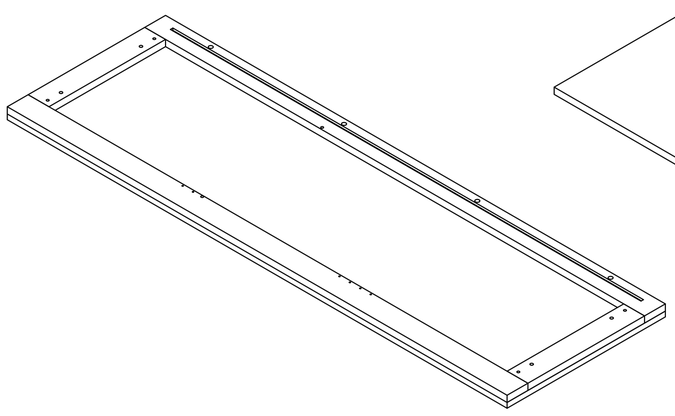

Mx1

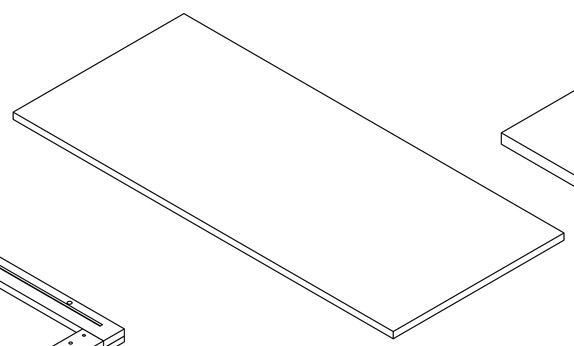

Nx2

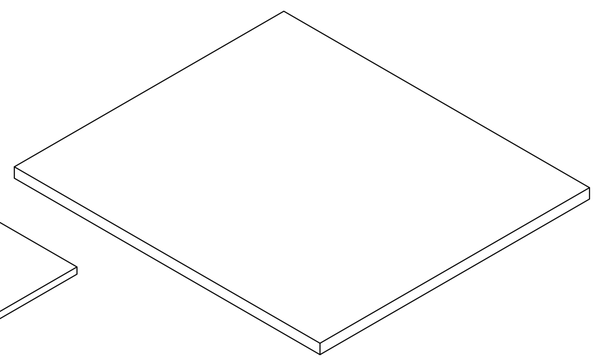

0x1

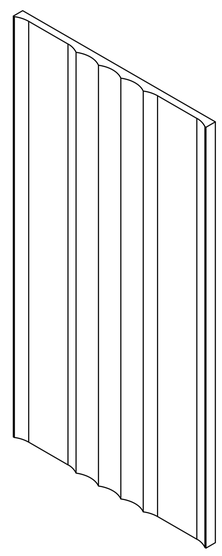

Px3

1

Accessories list

1	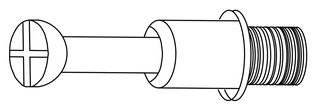	Two in one screw (6x28mm)	48pcs +4pcs
2		Two in one nut (10x12mm)	48pcs +4pcs
3		Wood chipping (6x30mm)	14pcs +2pcs
4	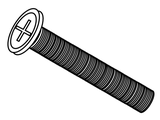	Screw (6x33mm)	1pcs
5		Non-slip pads (35x35)	5pcs +1pcs
6	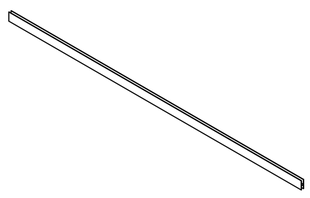	Backboard card strip (1116mm)	1pcs
7	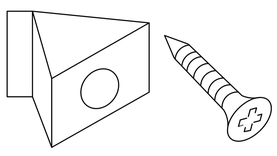	Fixing clip & screw (3x16mm)	8pcs +2pcs
8	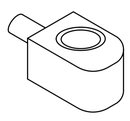	Laminate Support Nail	12pcs +1pcs
9	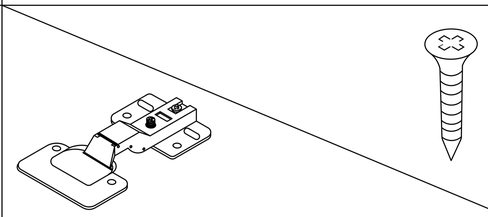	Hinge & Screw (3.5x12mm)	24pcs +2pcs 4pcs
10	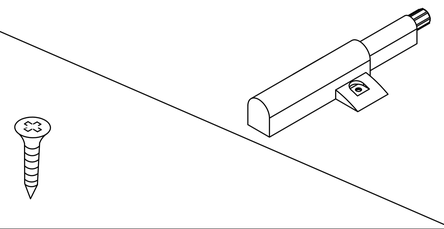	Cabinet door rebound device Screw (3.5x12mm)	3pcs 6pcs +2pcs
11	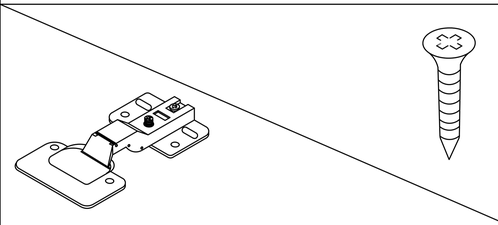	Hinge & Screw (3.5x12mm)	12pcs +2pcs 2pcs

Double-head screwdriver, use as required

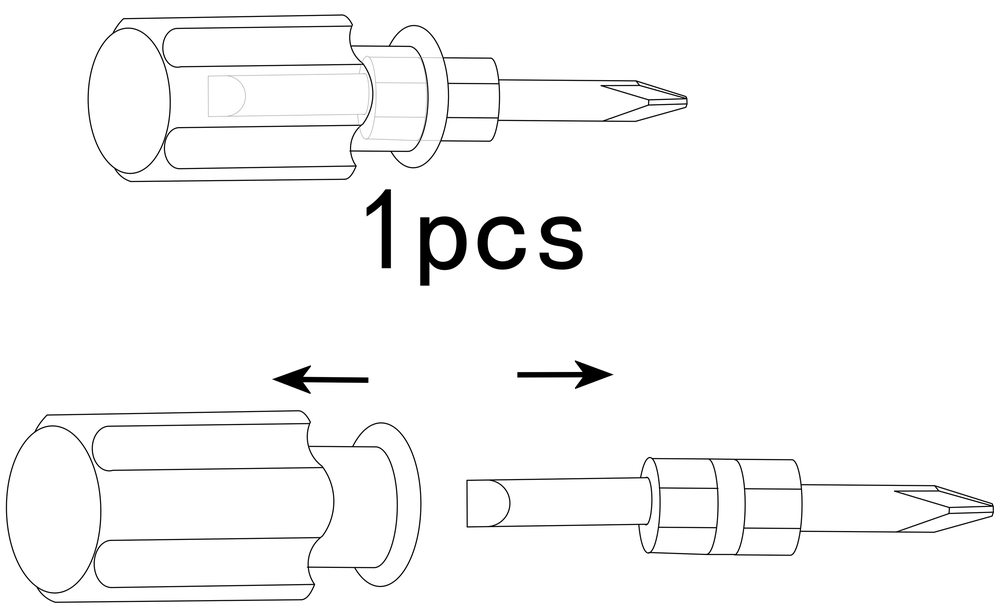

Product structure decomposition

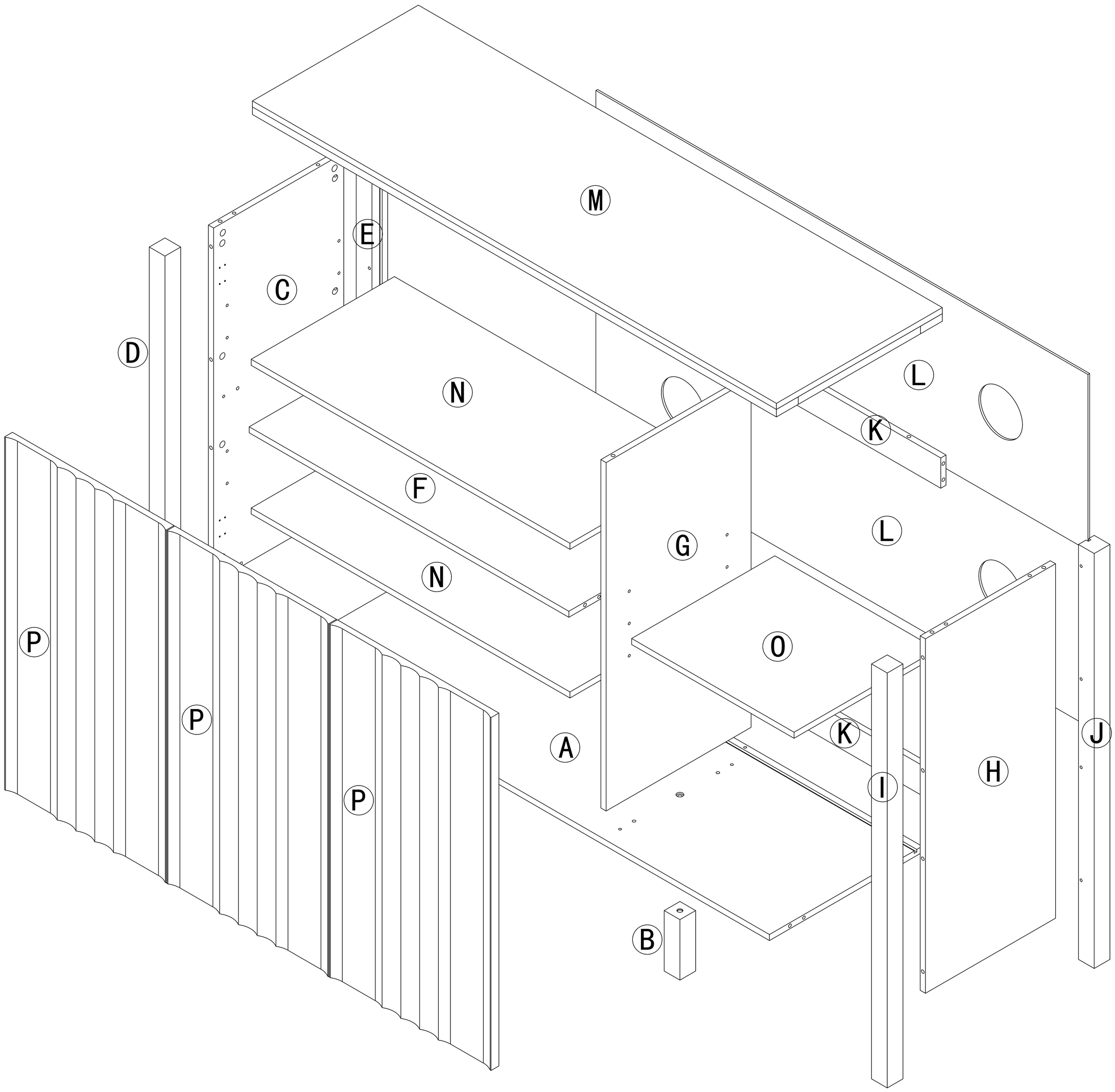

3

Use parts ① and ②

Step1

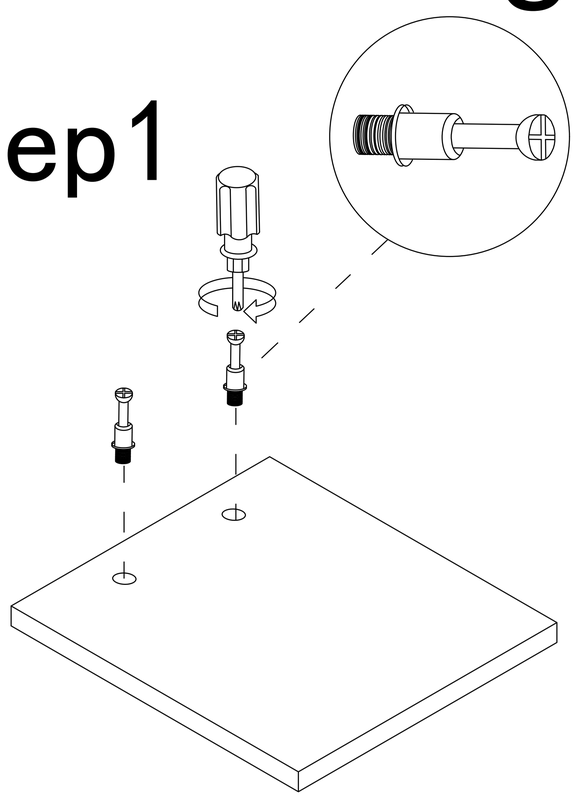

Step2

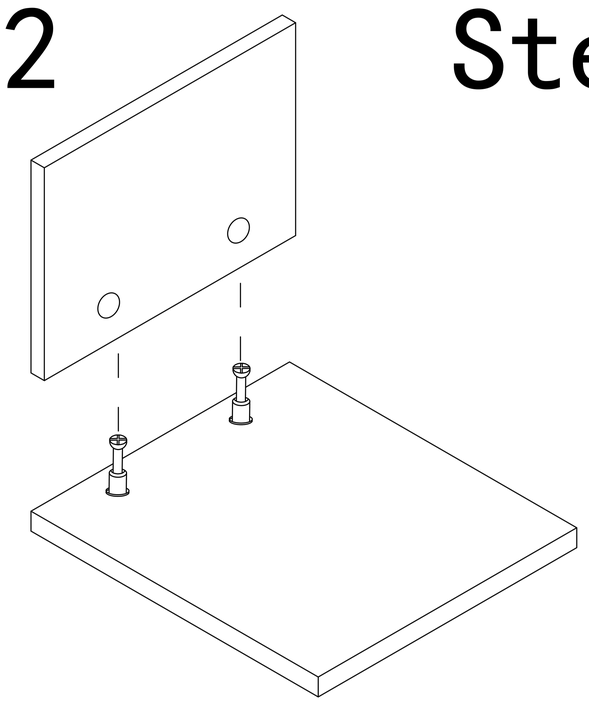

Step3

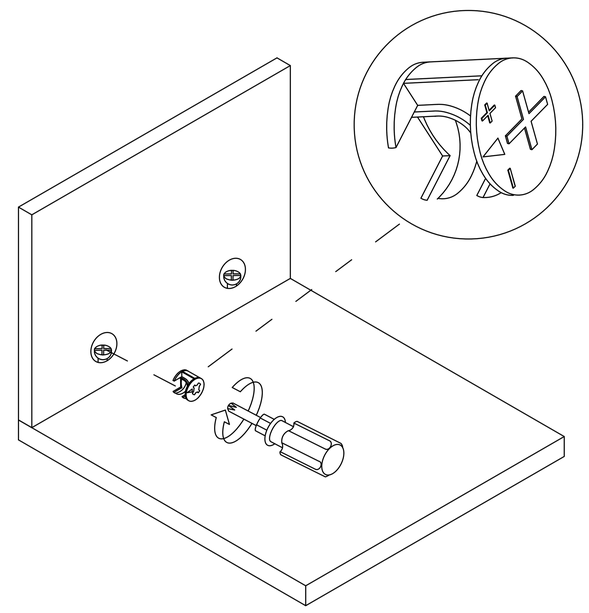

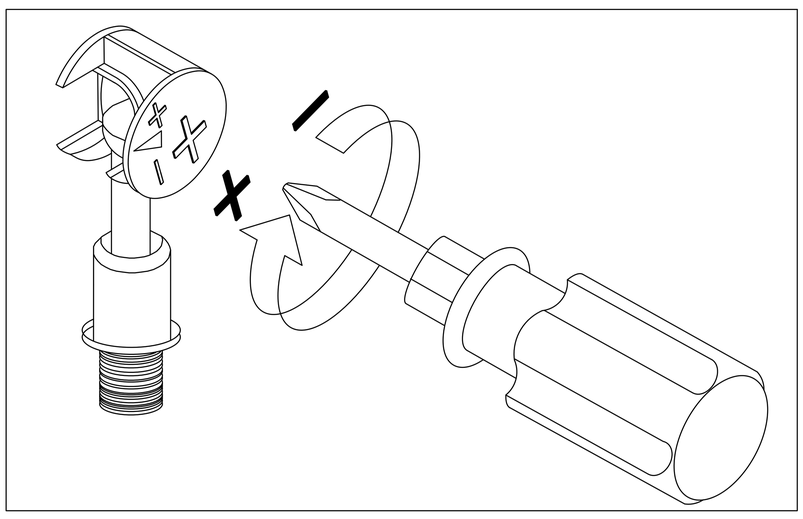

Use a screwdriver to lock in the direction of the "+" sign

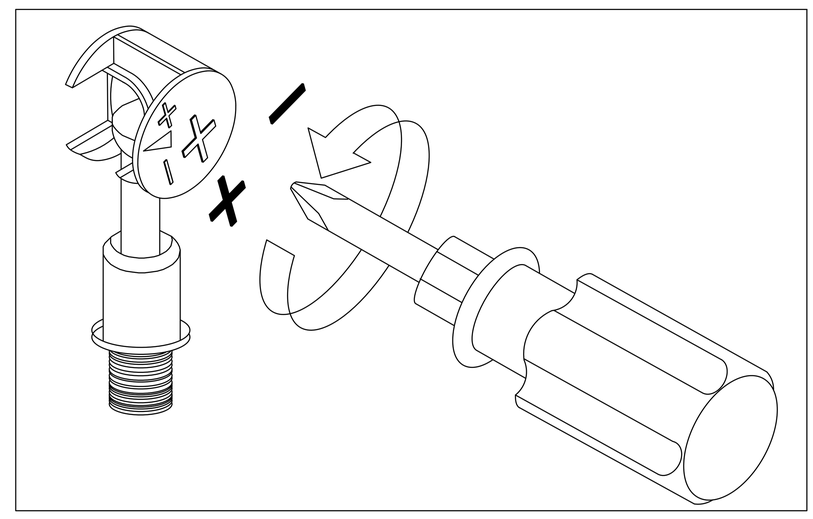

Disassemble along the direction of "-" sign

Step 1

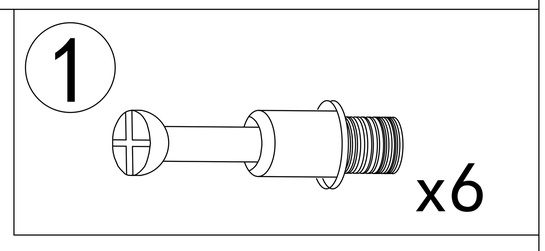

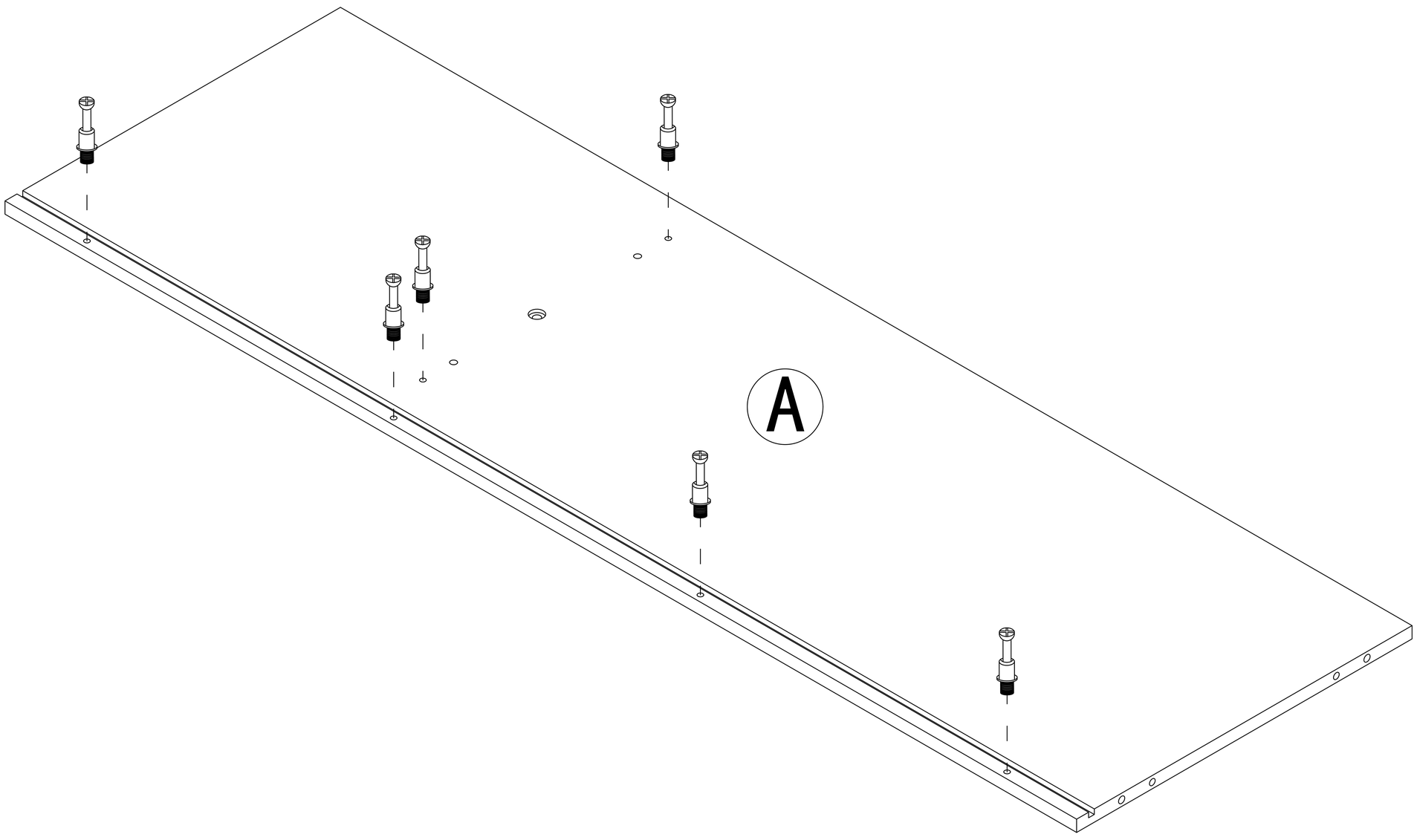

Step 2

2

x4

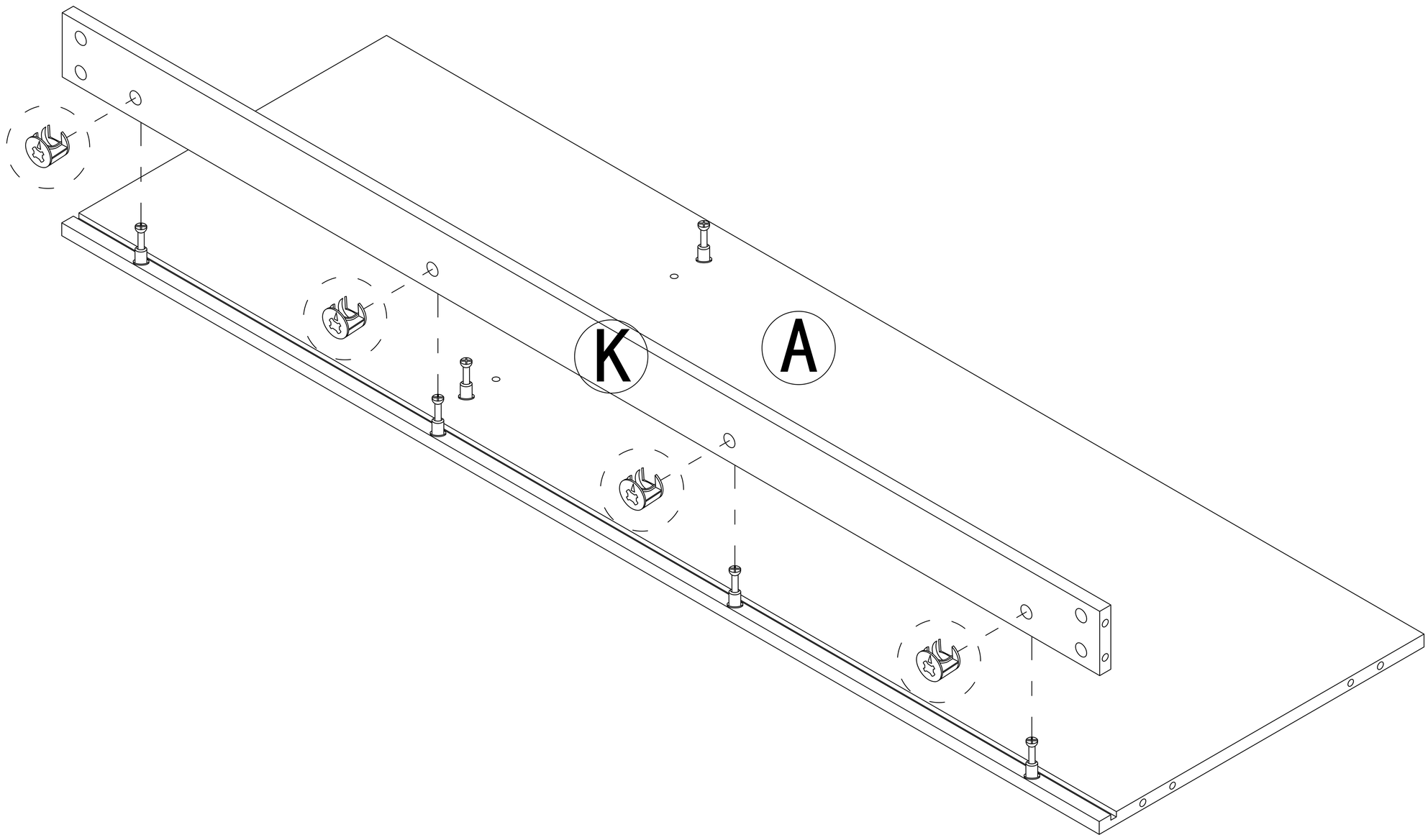

Step 3

4

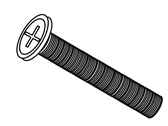

x1

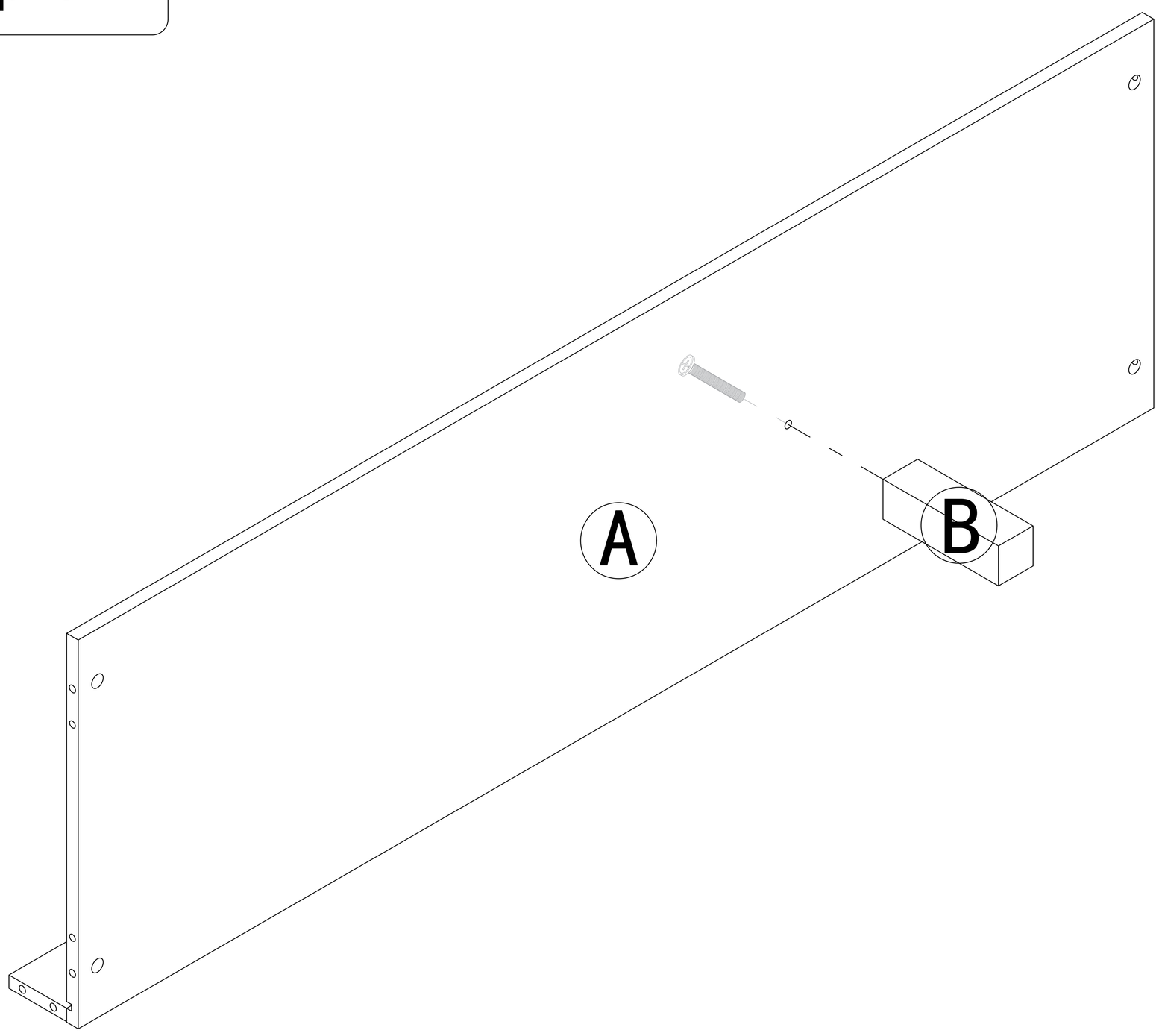

5

Step 4

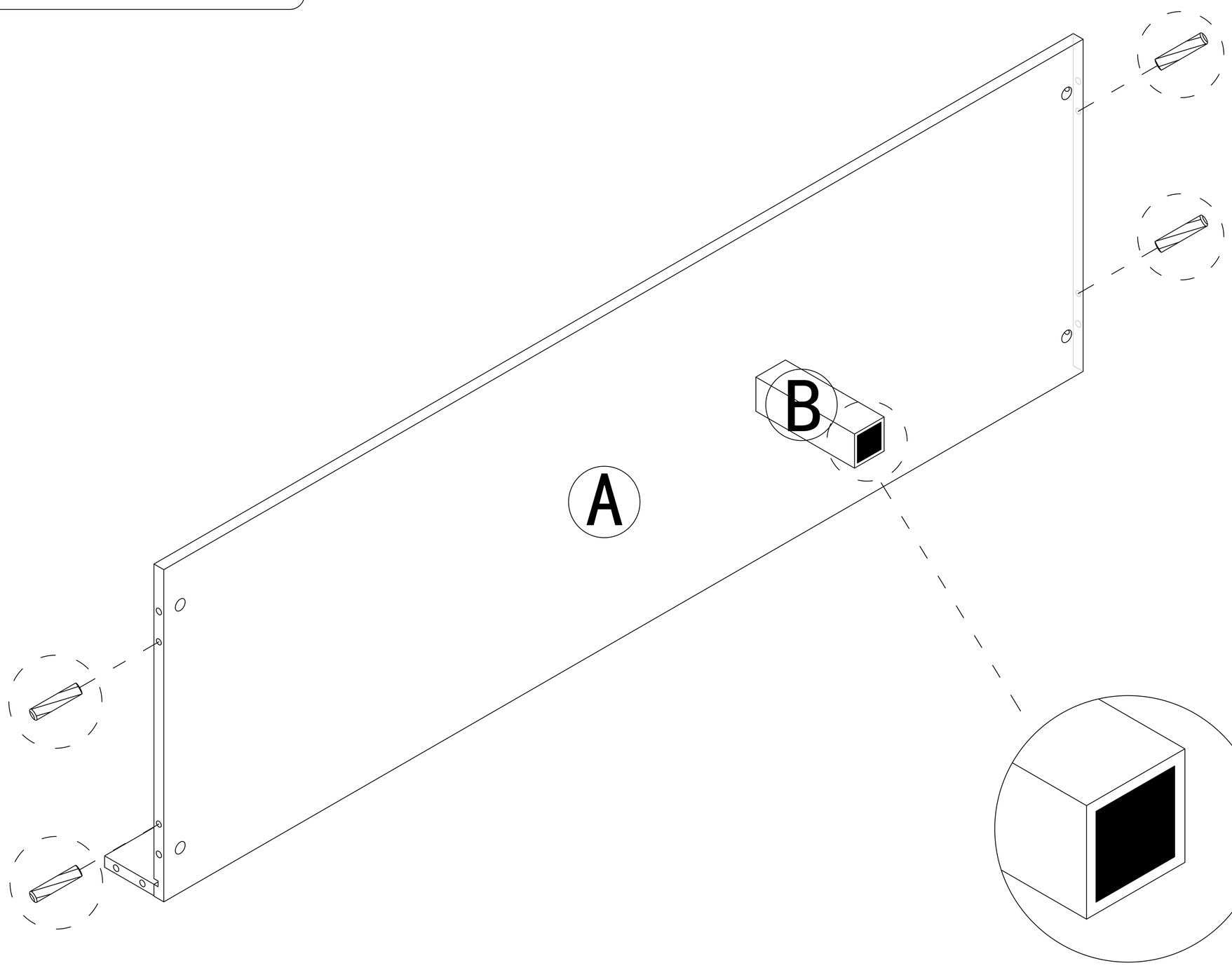

3

x4

5

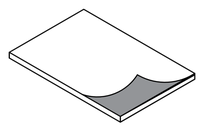

x1

Tear off release paper and stick the black foot pad on the board

Step 5

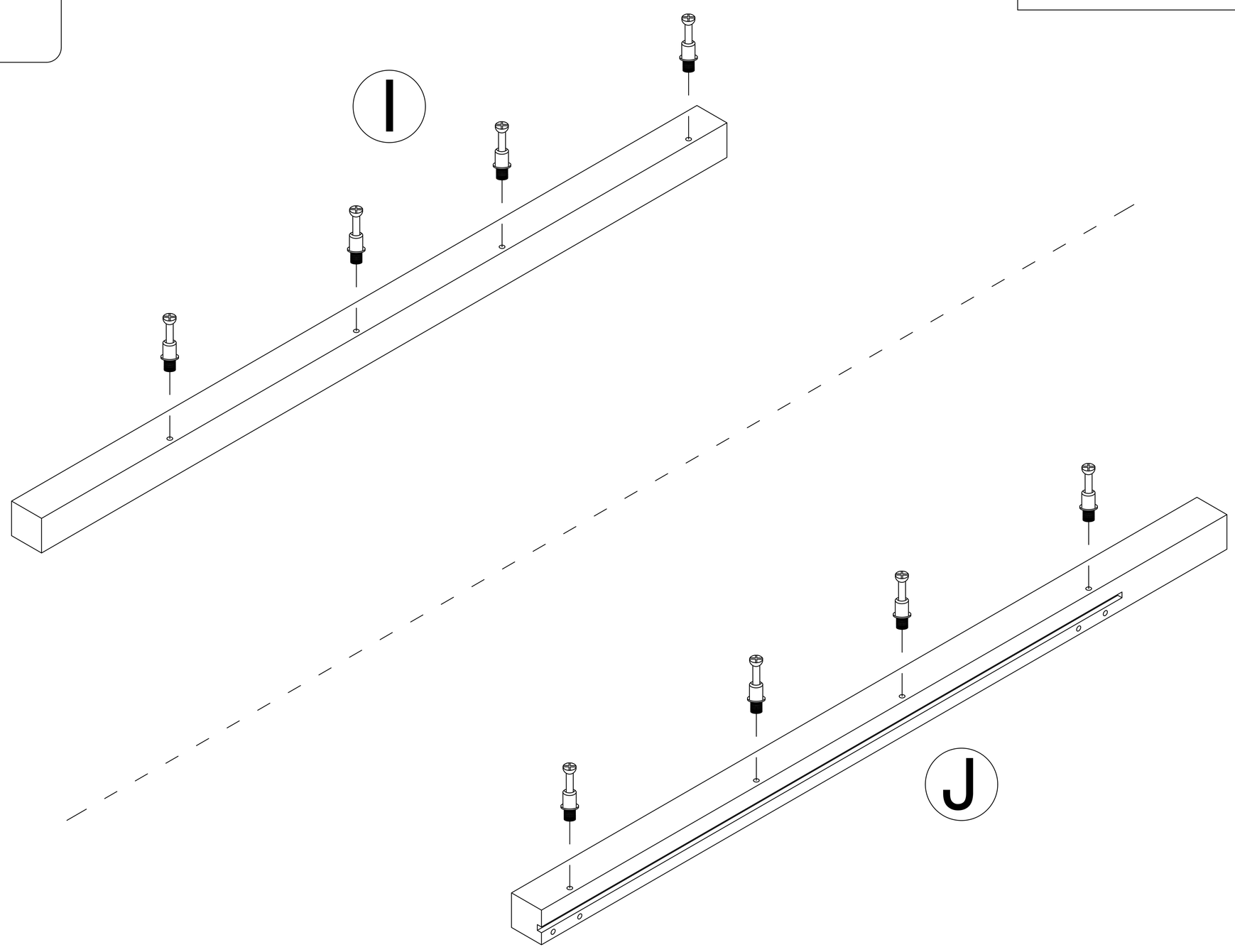

1

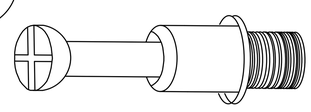

x8

6

Step 6

2

x8

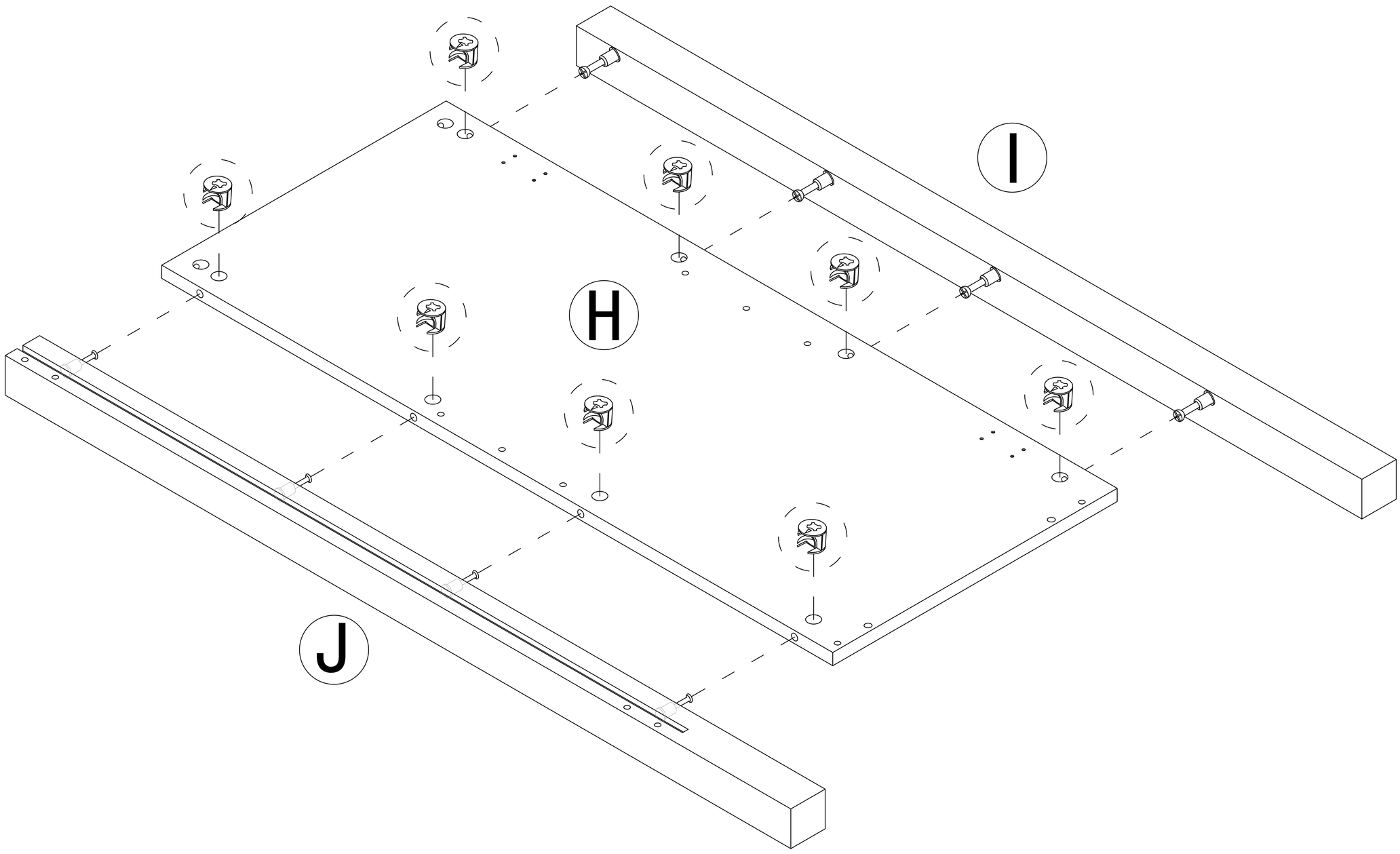

Step 7

1

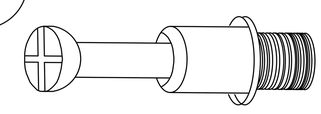

x6

5

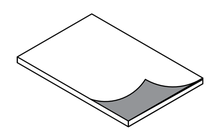

x2

Tear off release paper and stick the black foot pad on the board

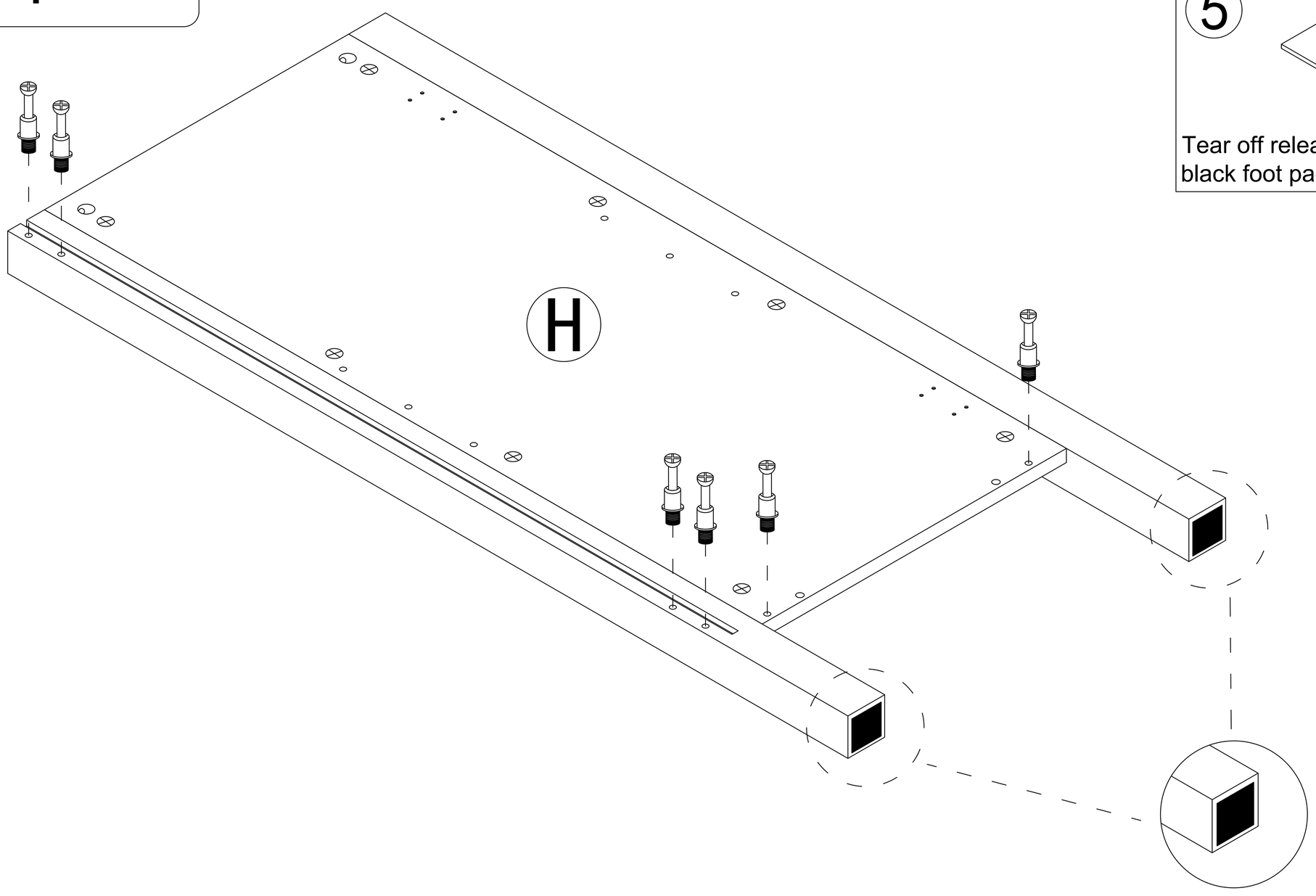

7

Step 8

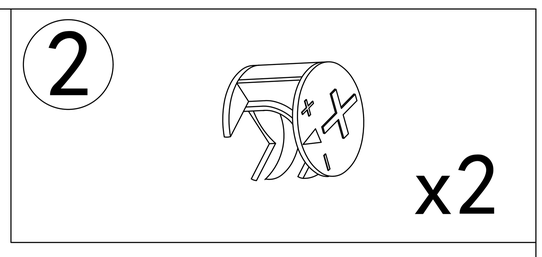

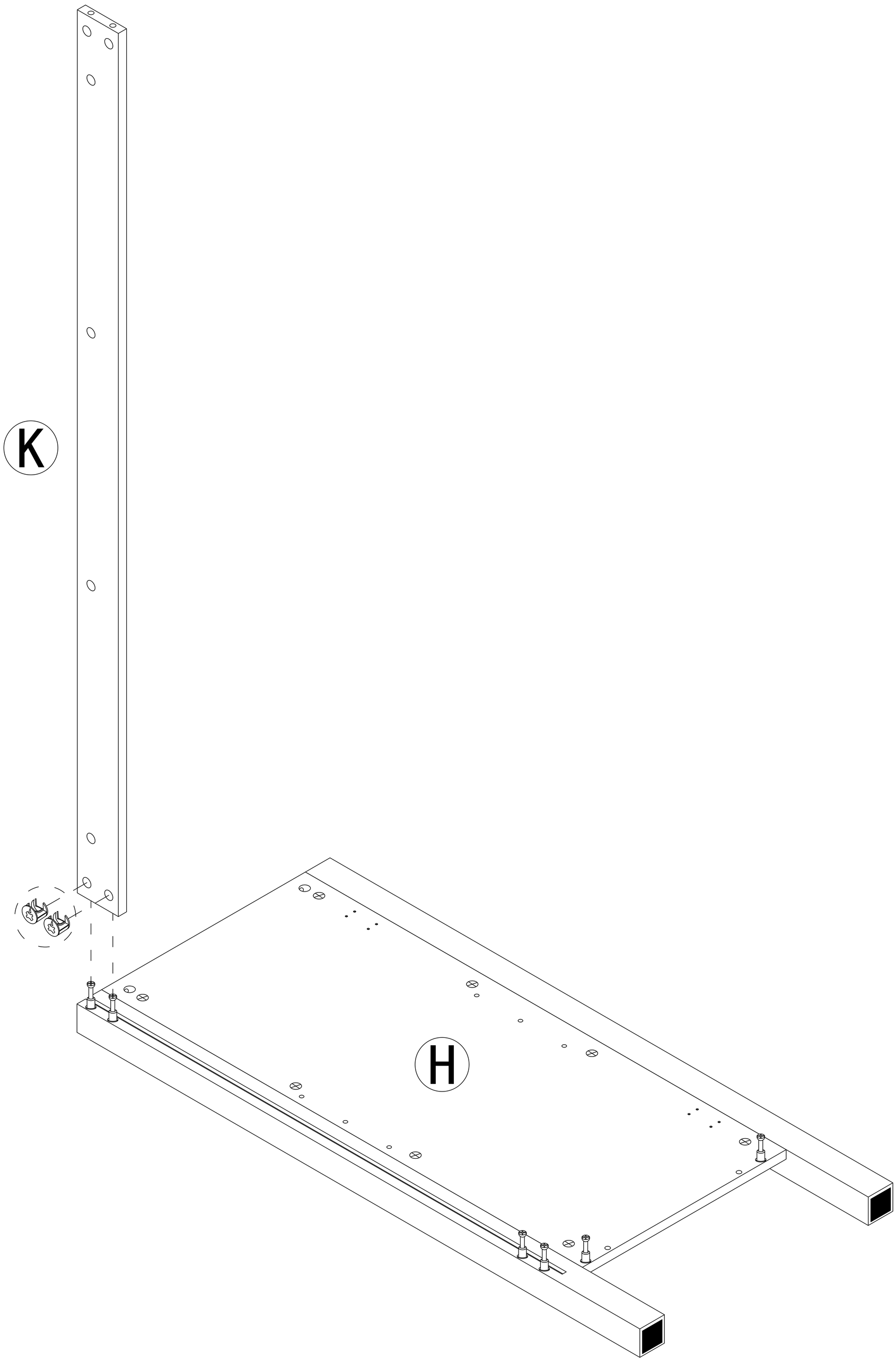

8

Step 9

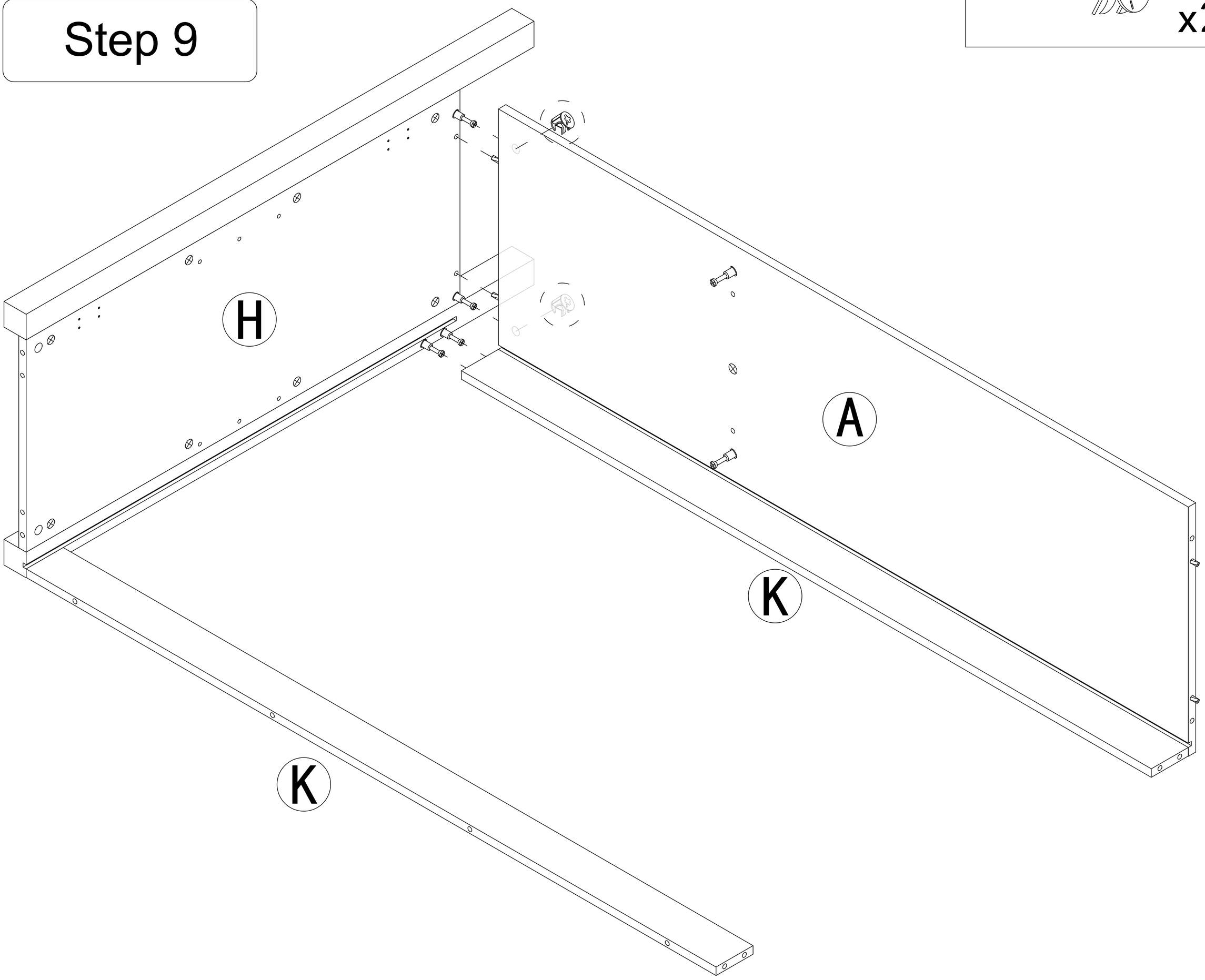

2

x2

Step 10

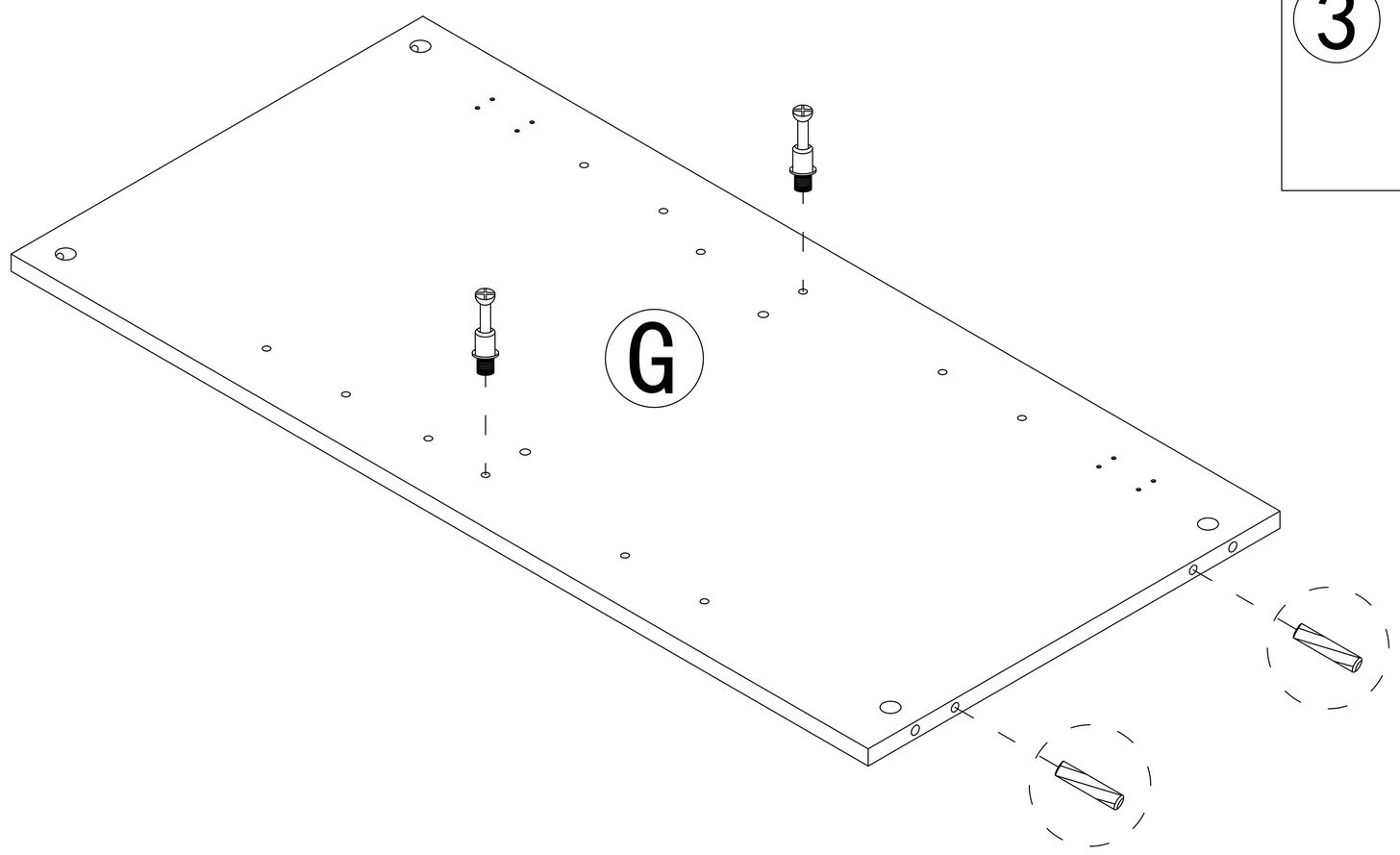

1

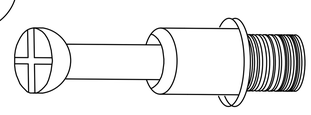

x2

3

x2

Step 11

2

x2

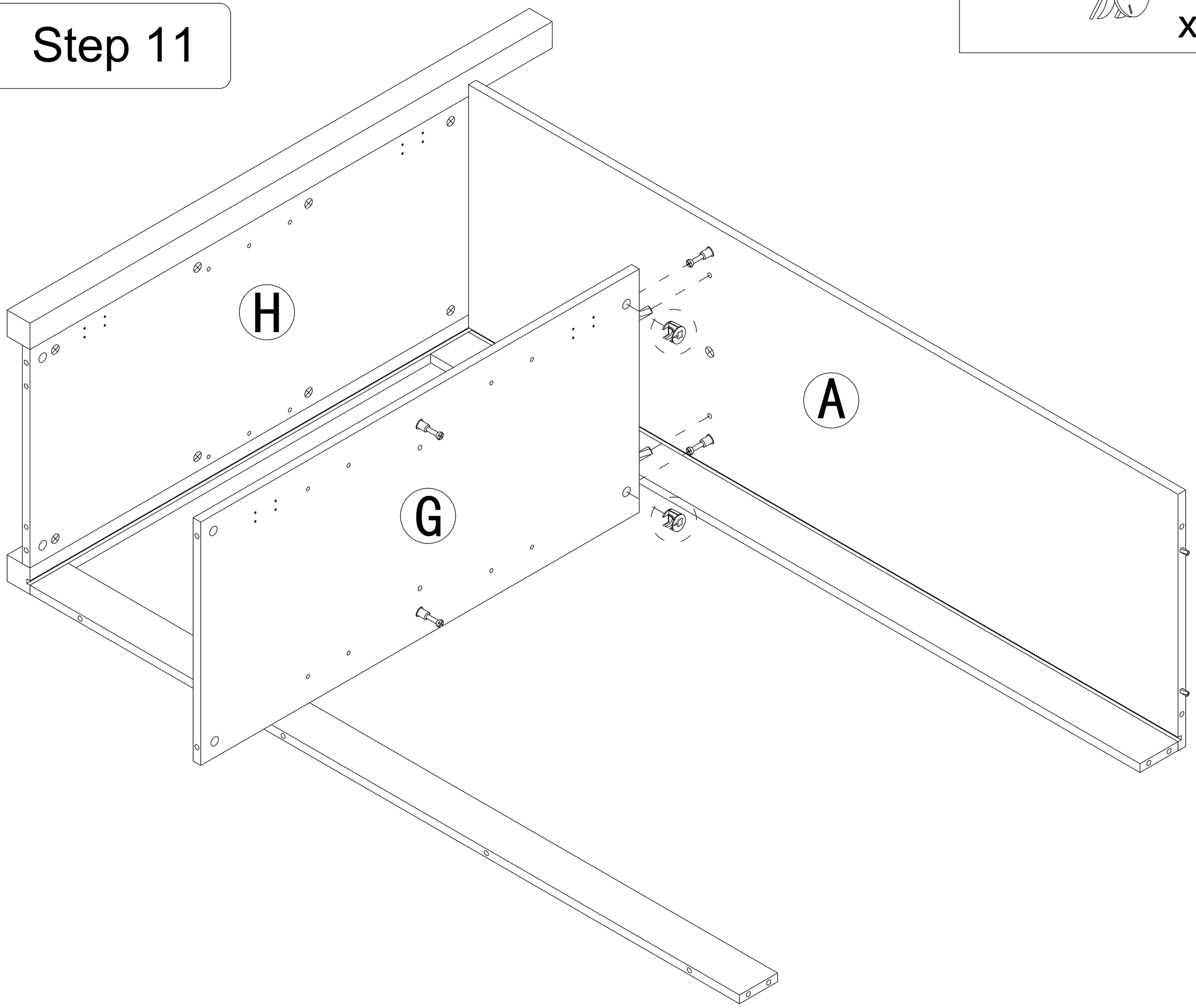

Step 12

3

x4

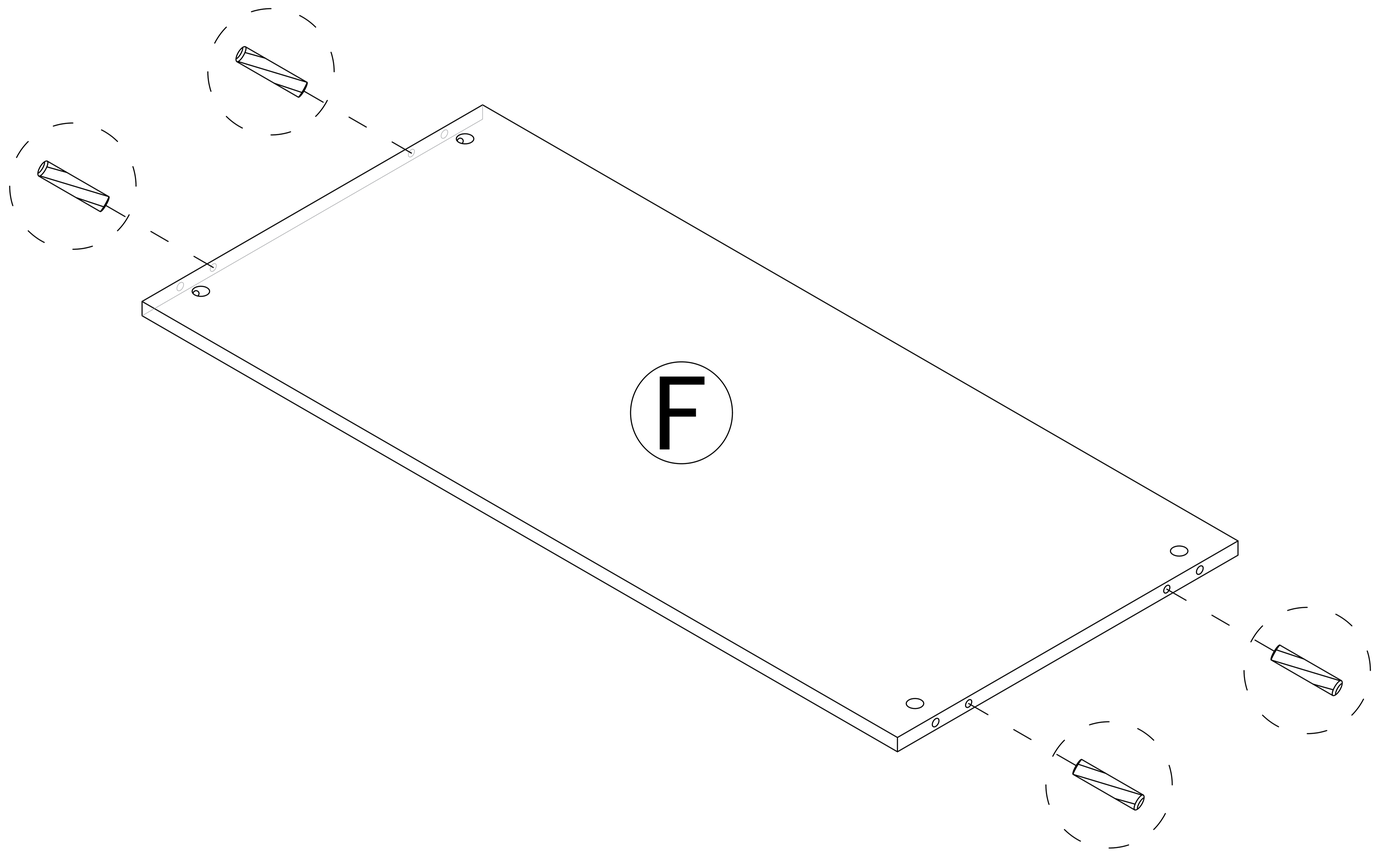

Step 13

2

x2

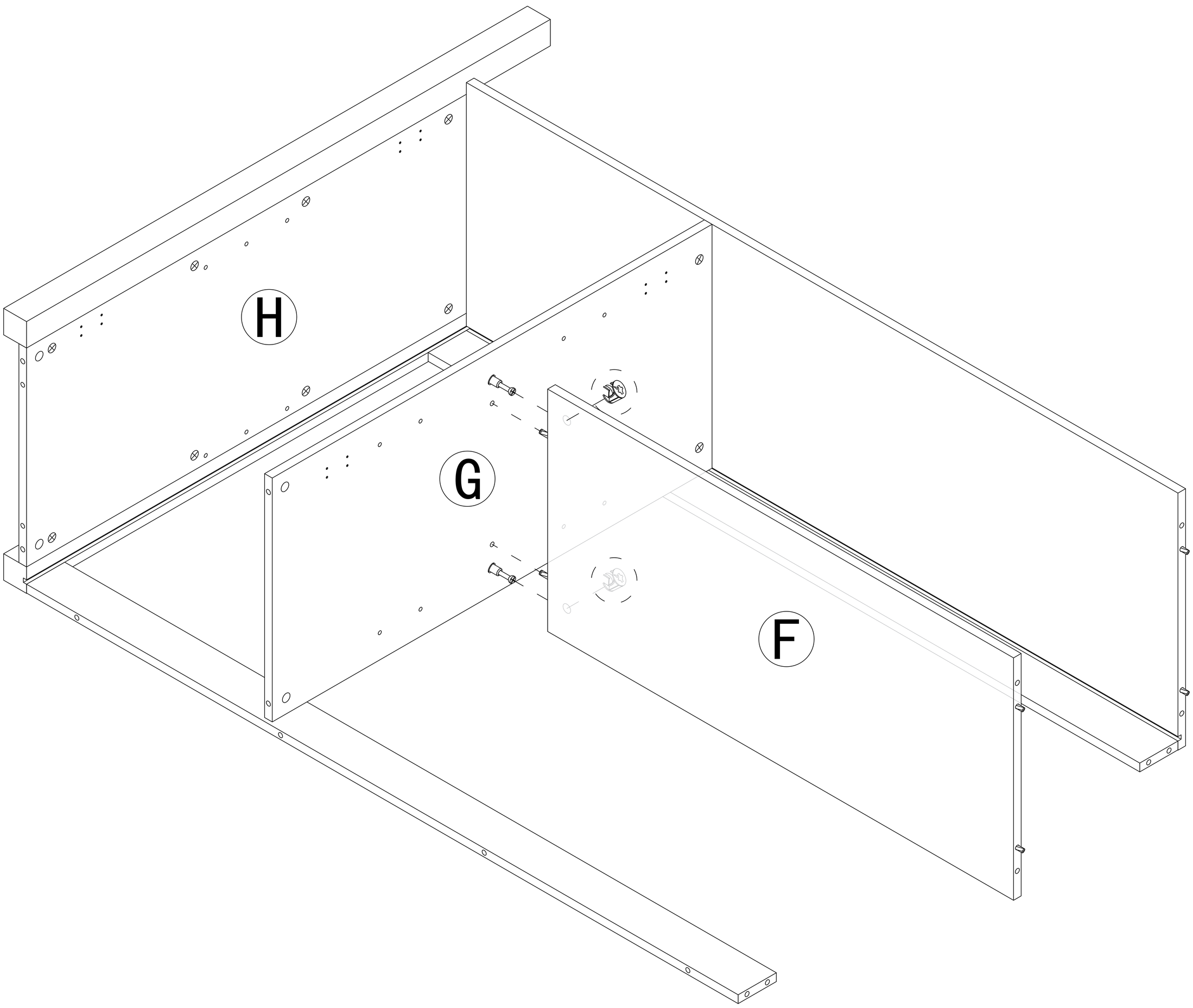

Step 14

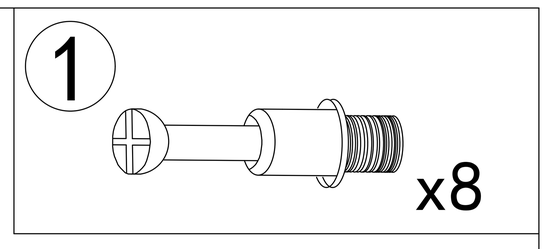

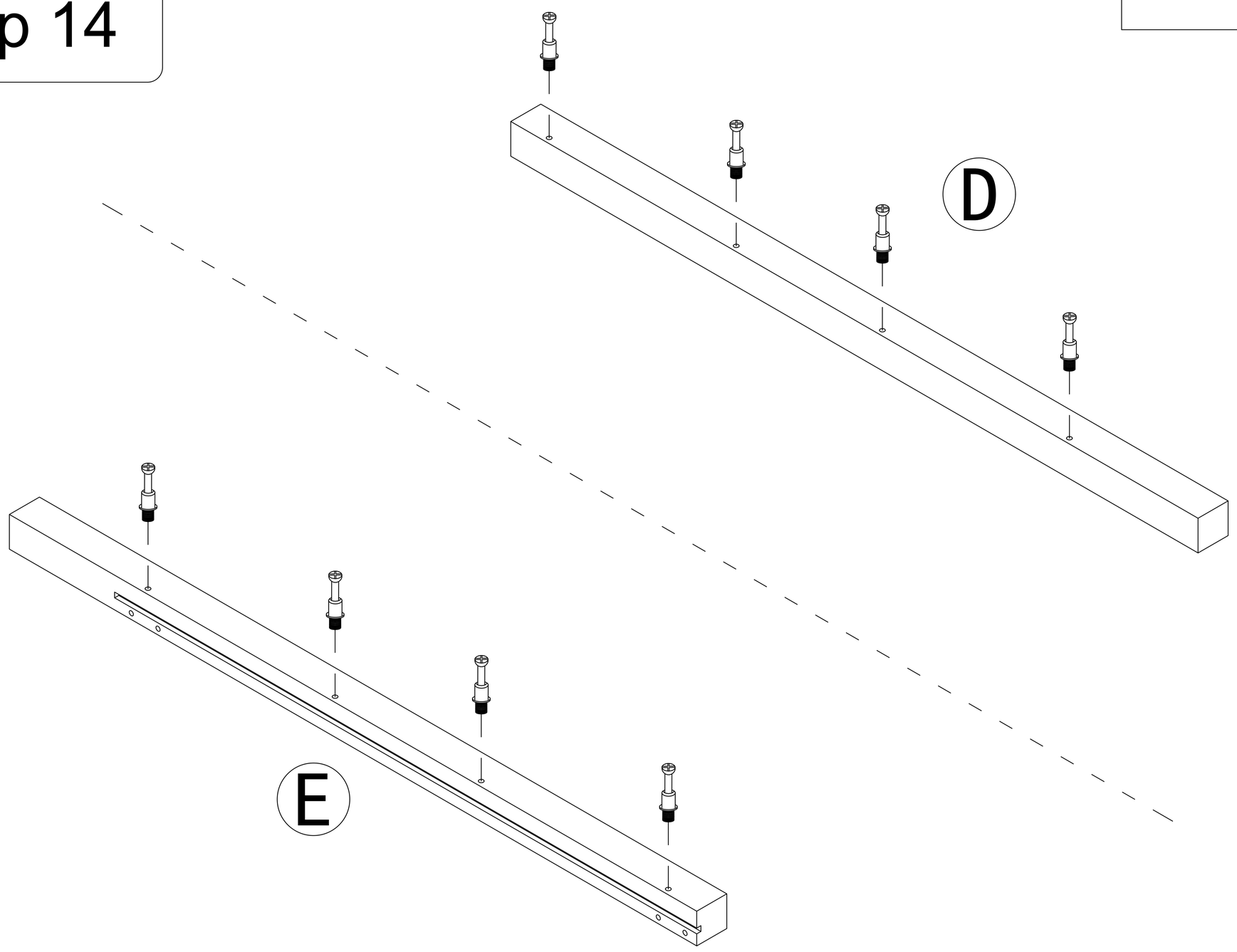

Step 15

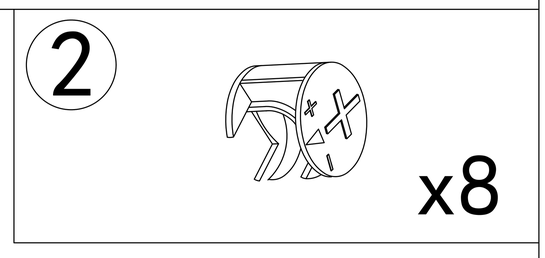

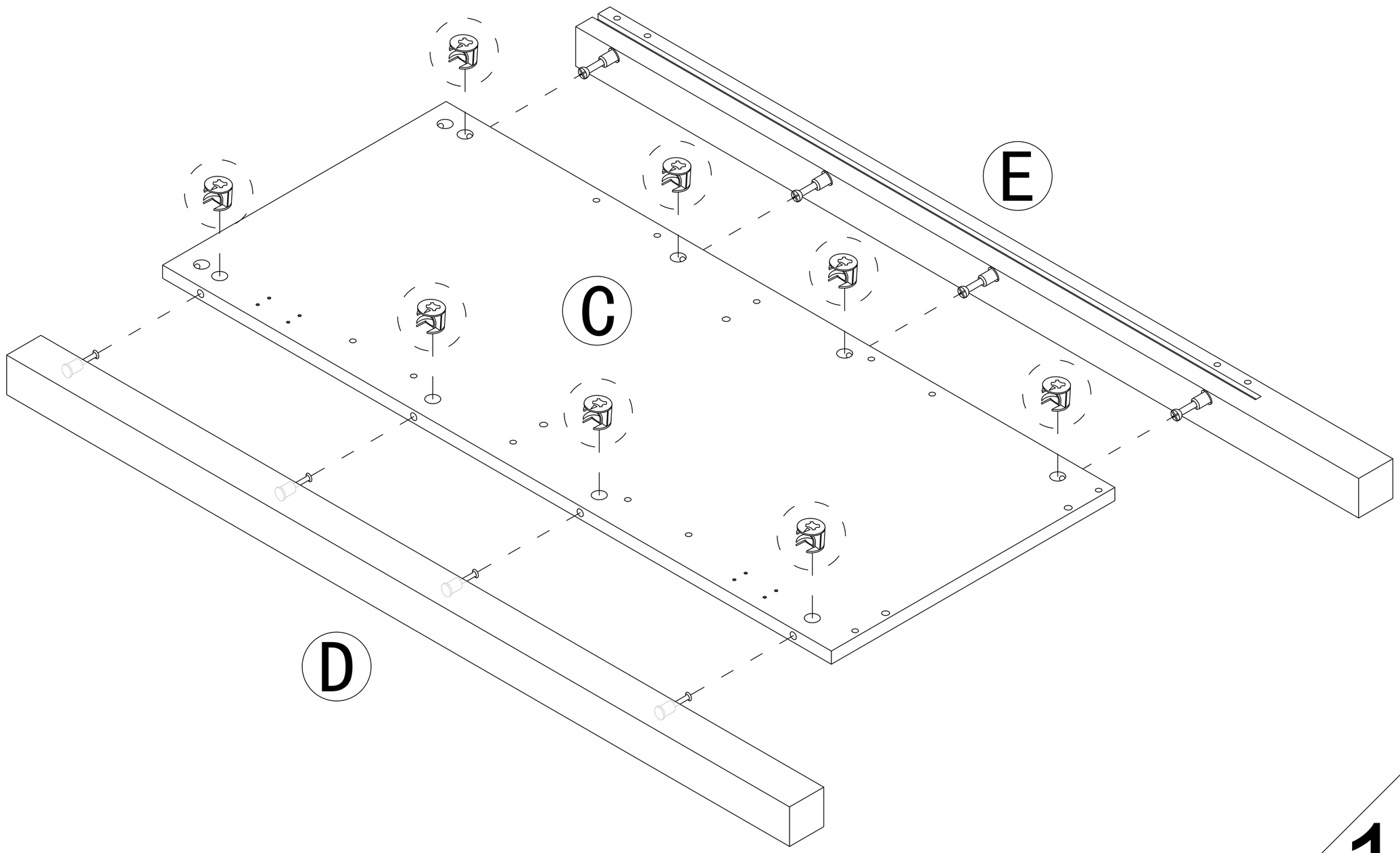

Step 16

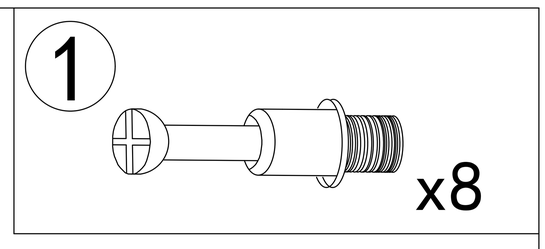

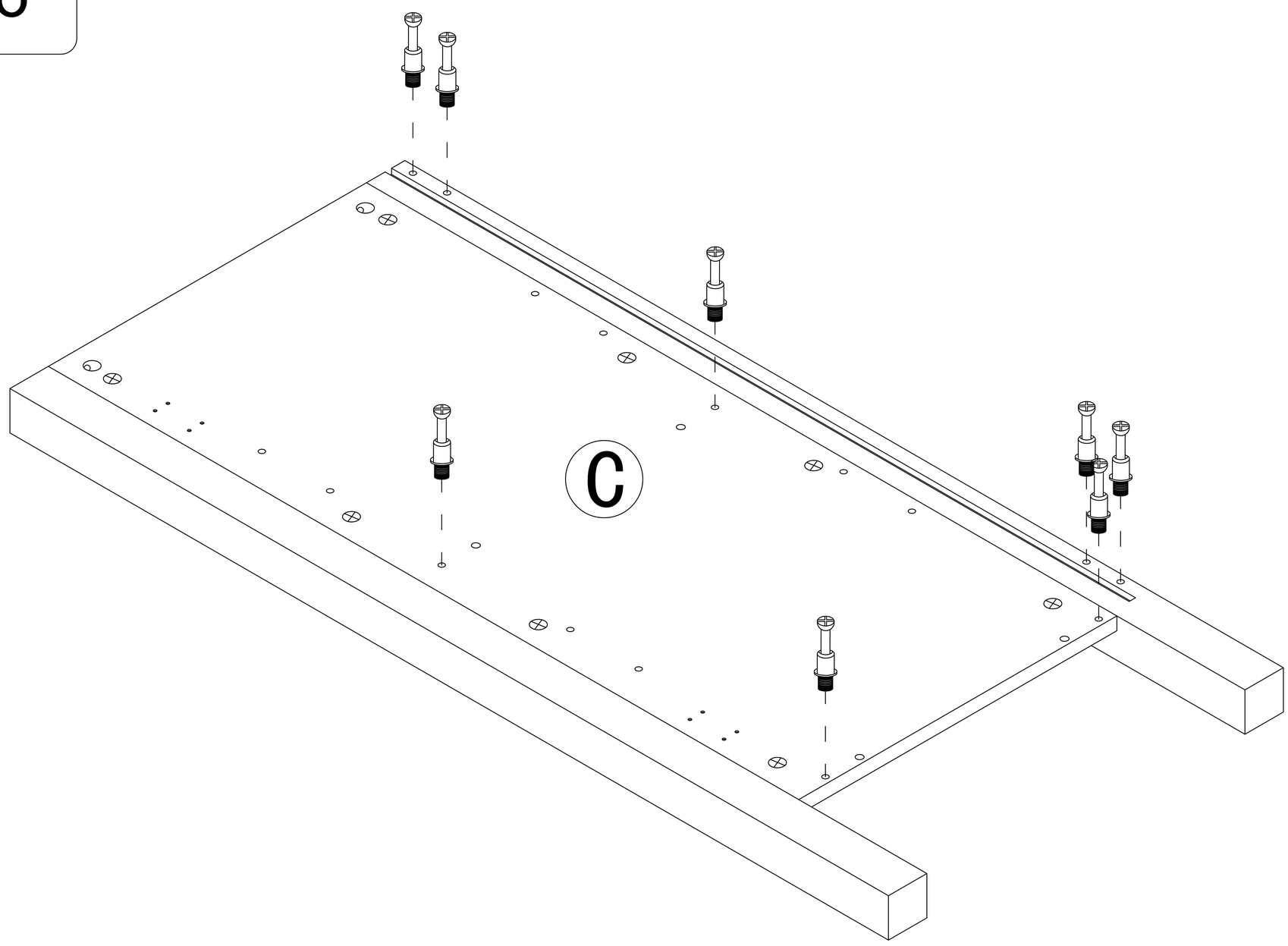

Step 17

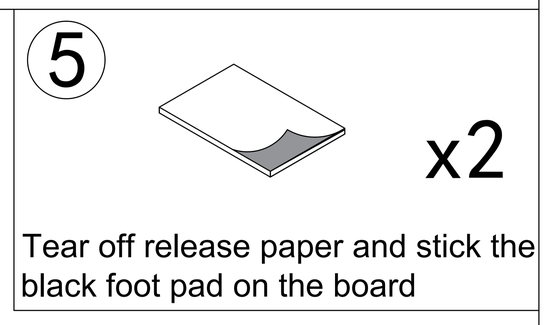

Tear off release paper and stick the black foot pad on the board

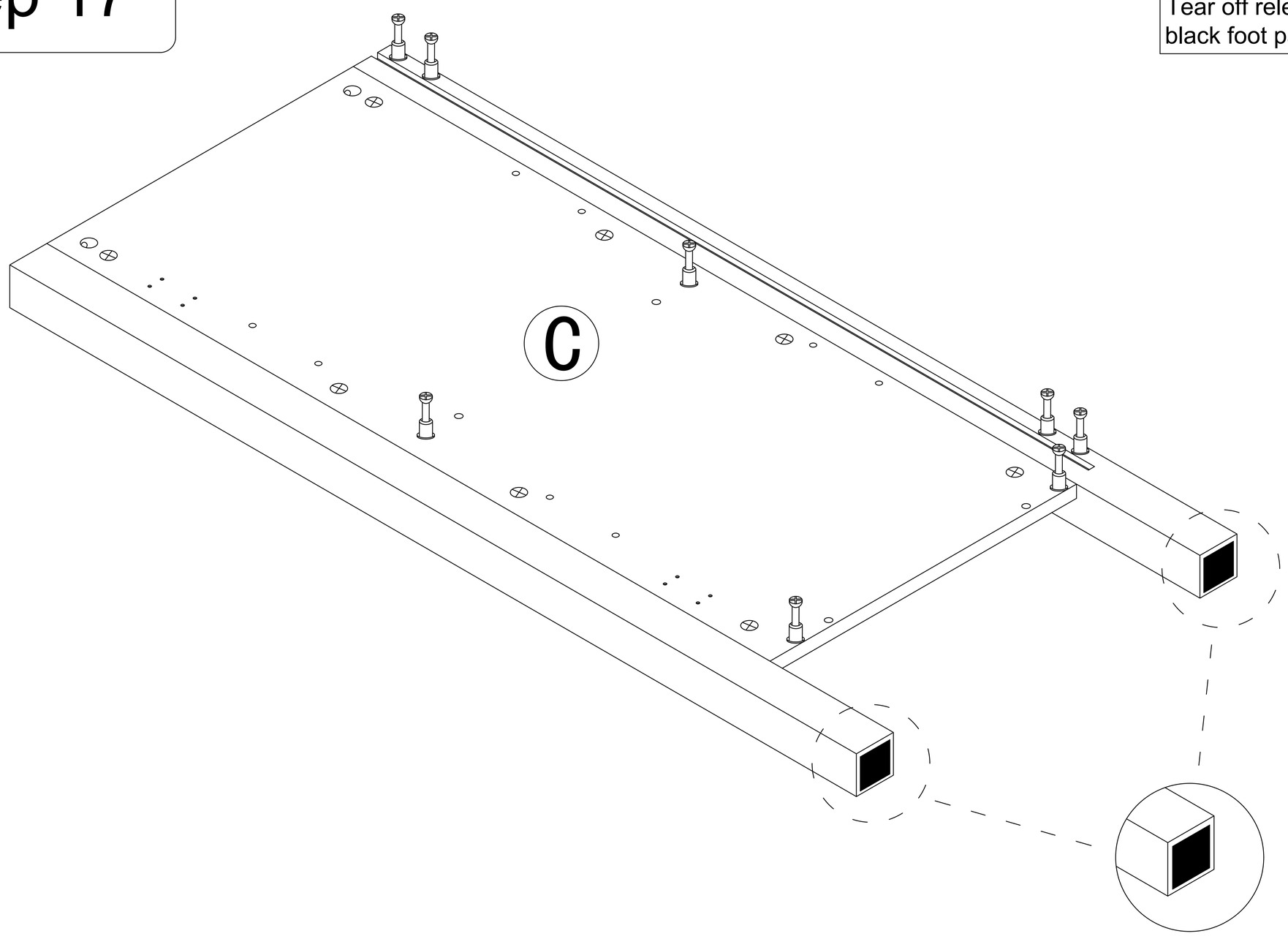

Step 18

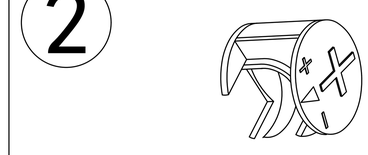

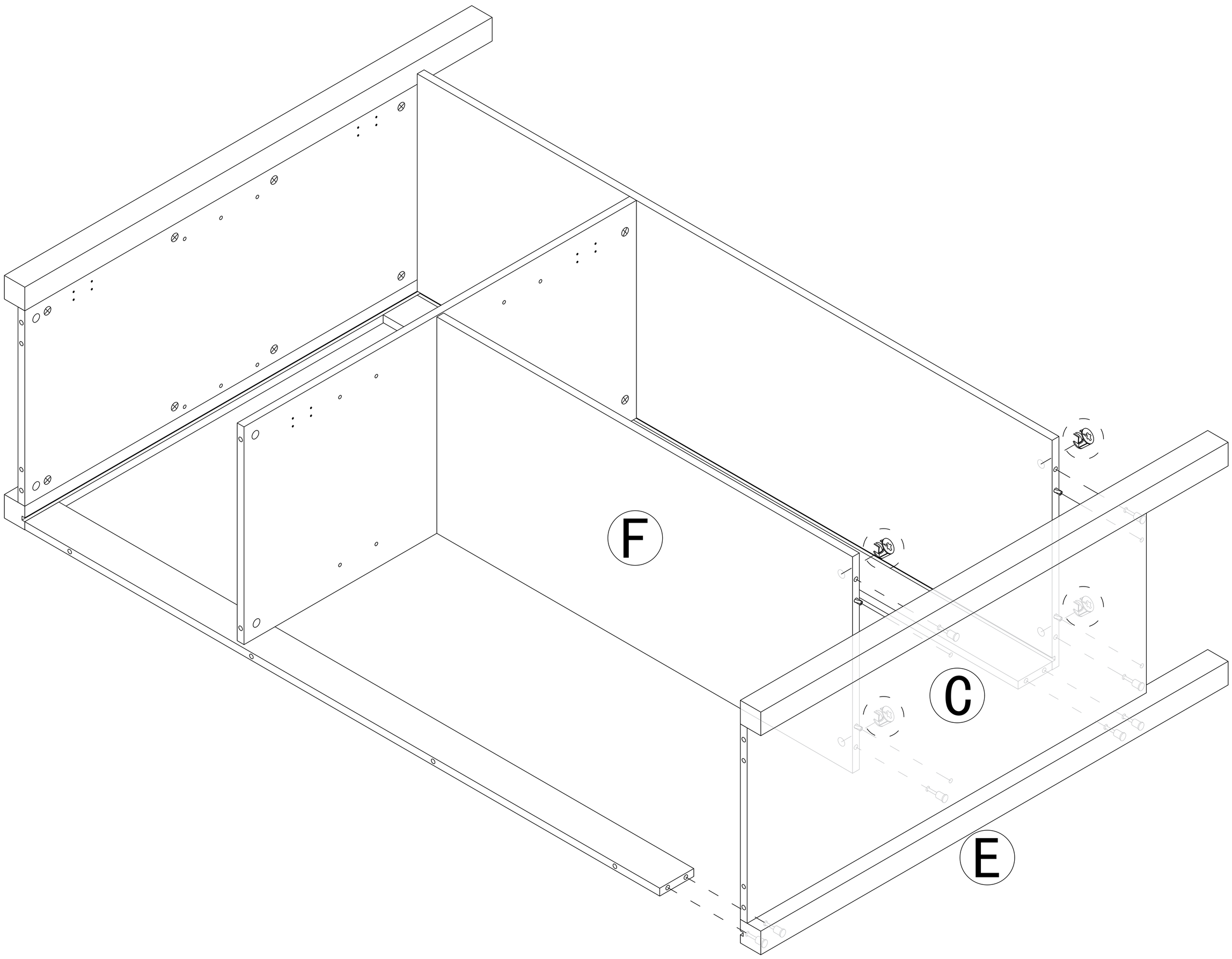

Step 19

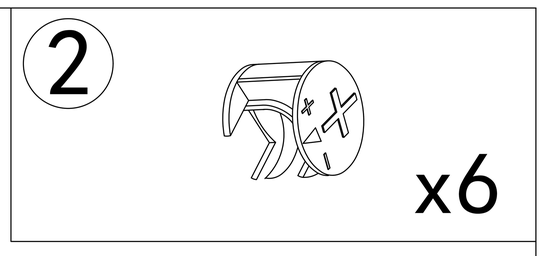

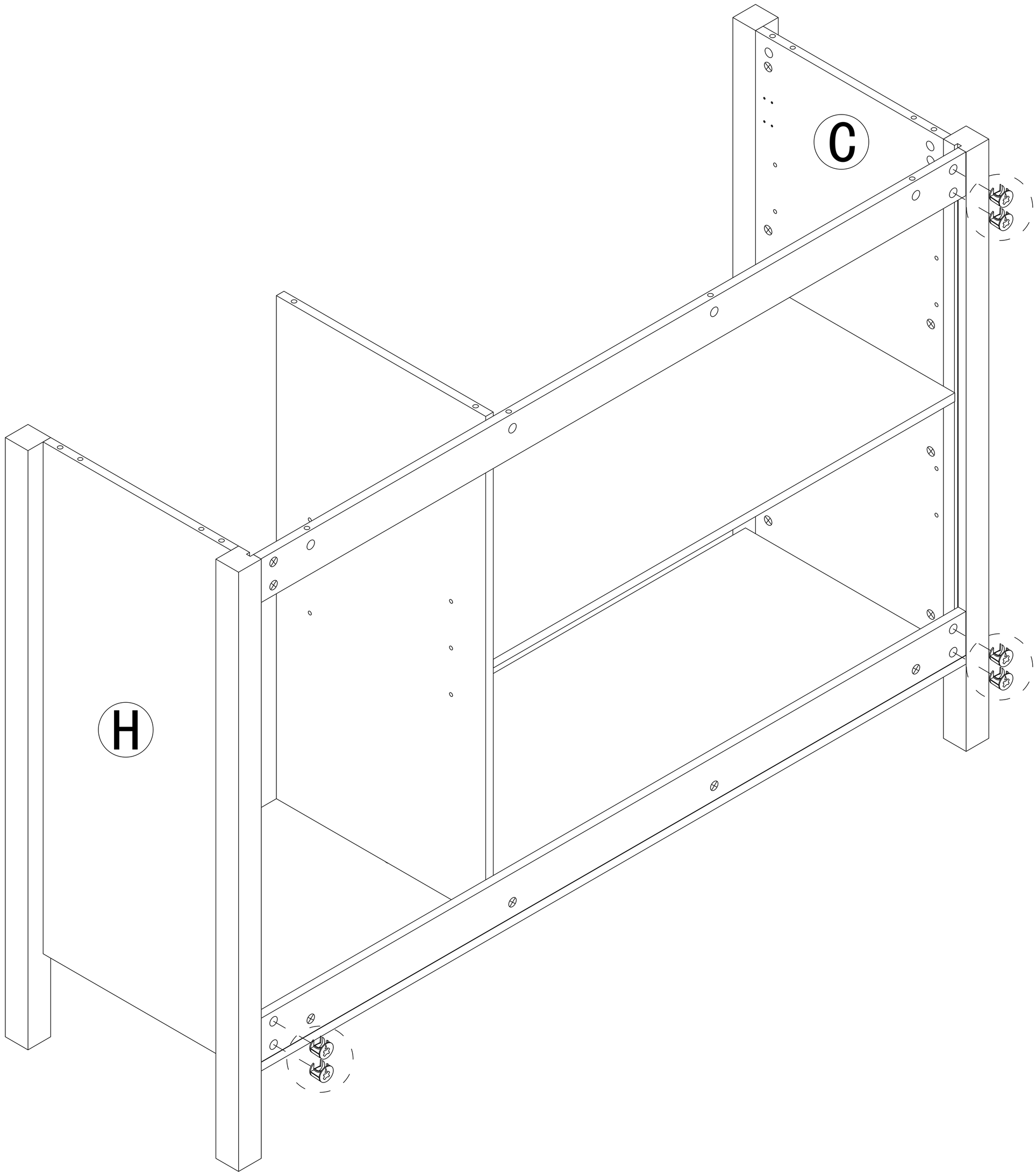

Step 20

Place the "L" board, Backboard card strip, and "L" board in order

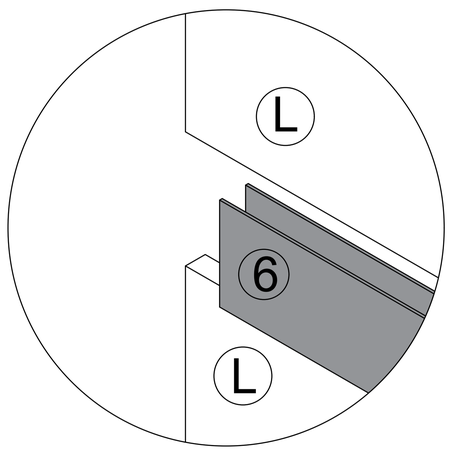

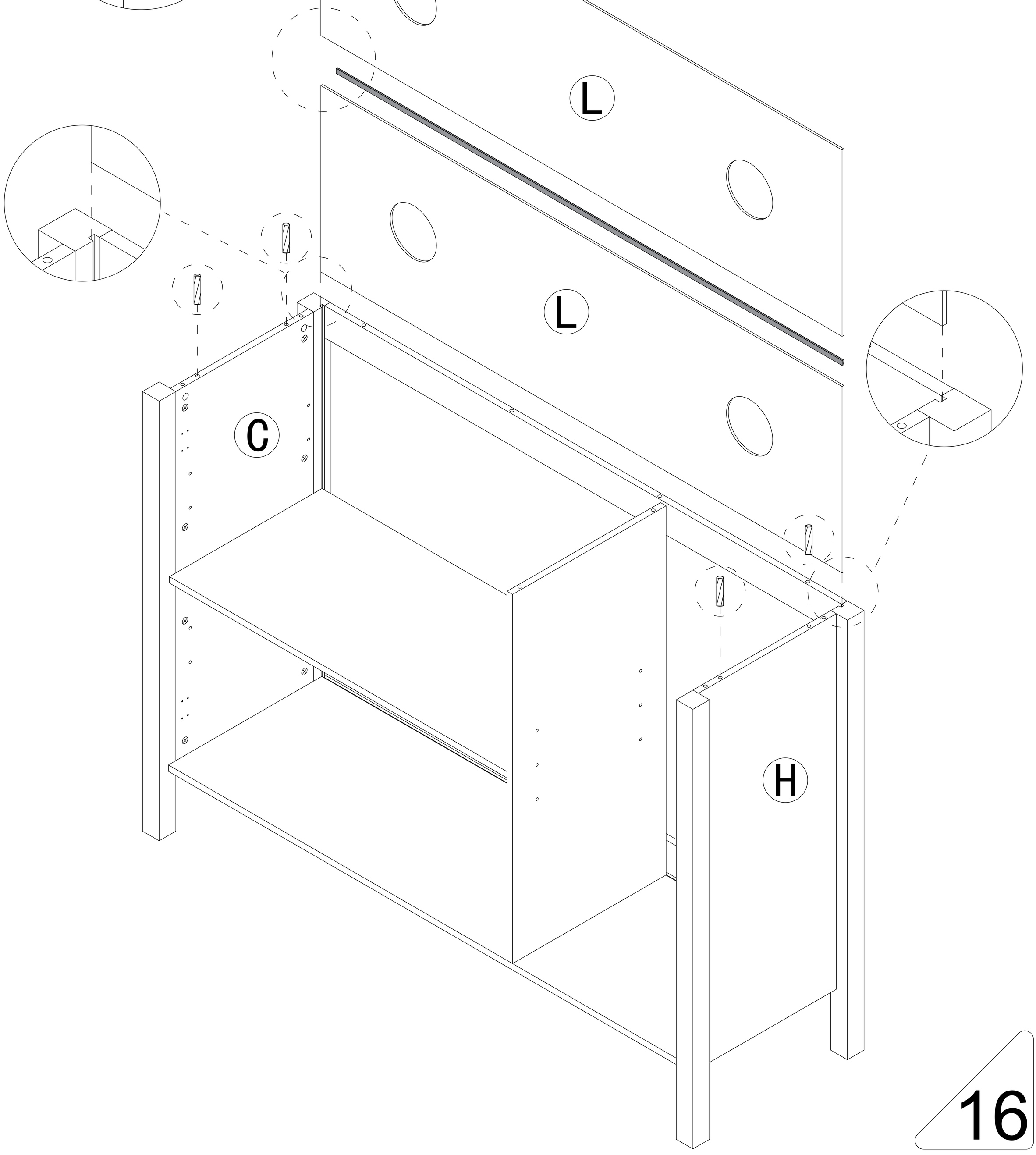

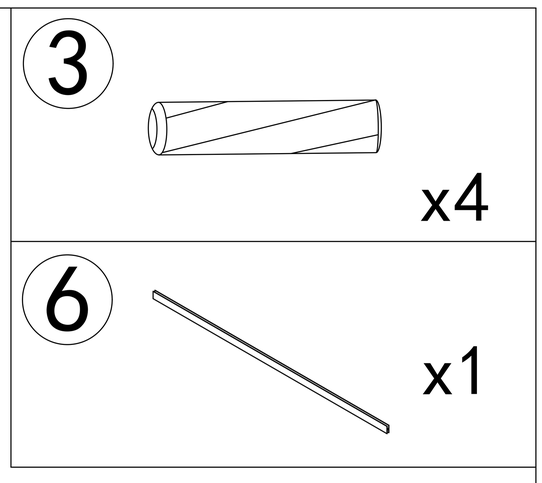

Step 21

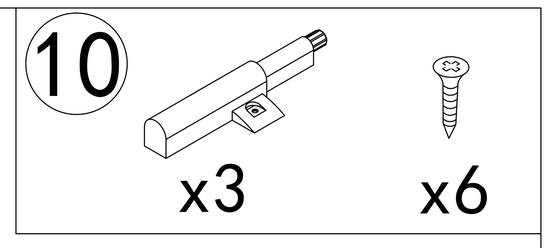

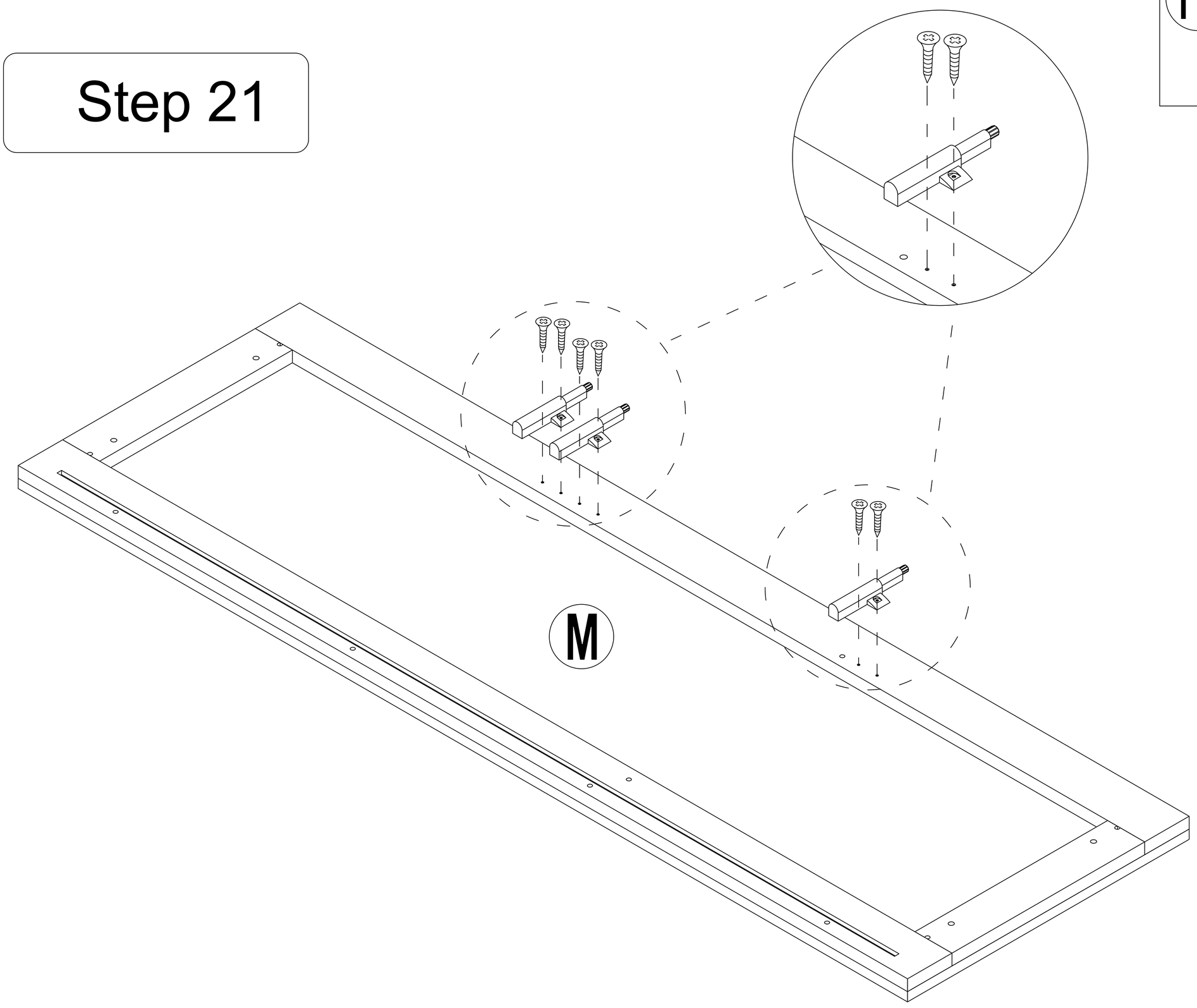

Step 22

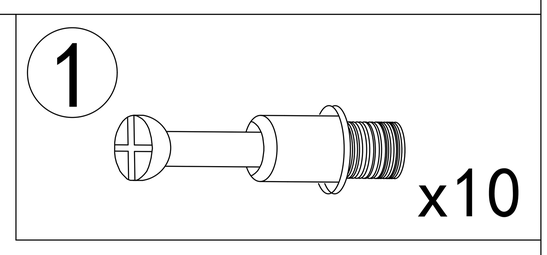

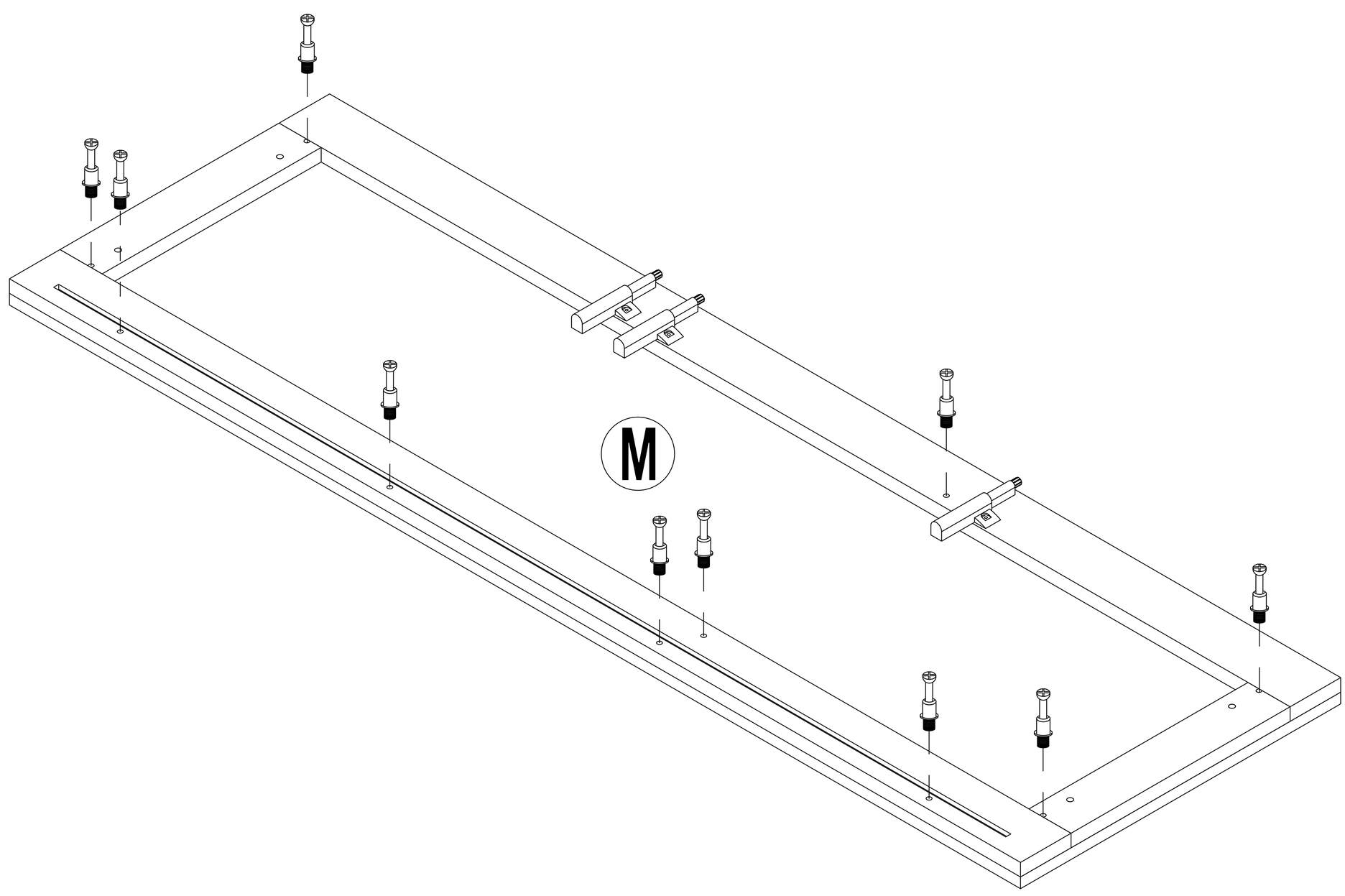

Step 23

2

x10

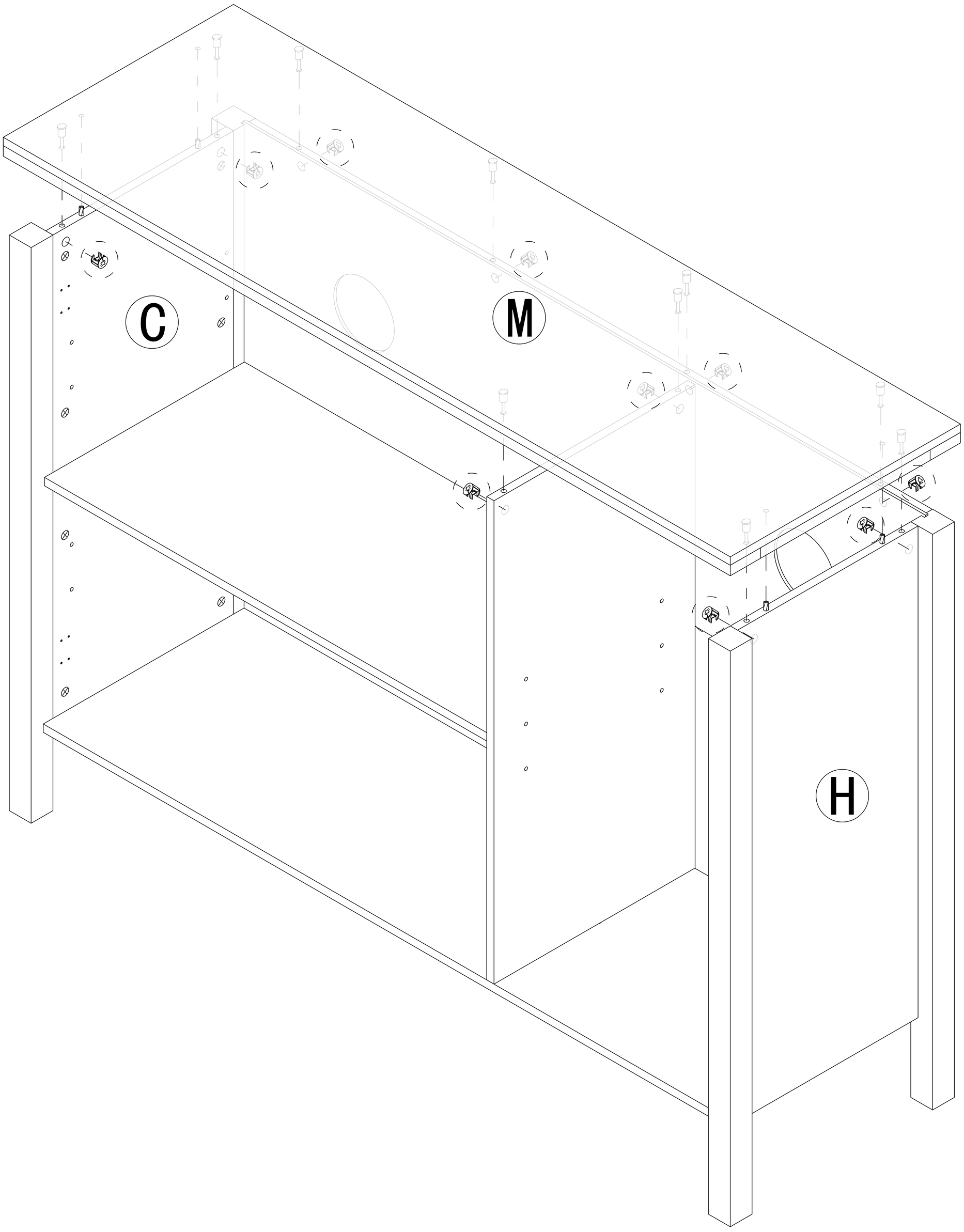

Step 24

8

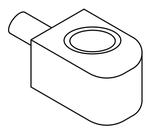

x12

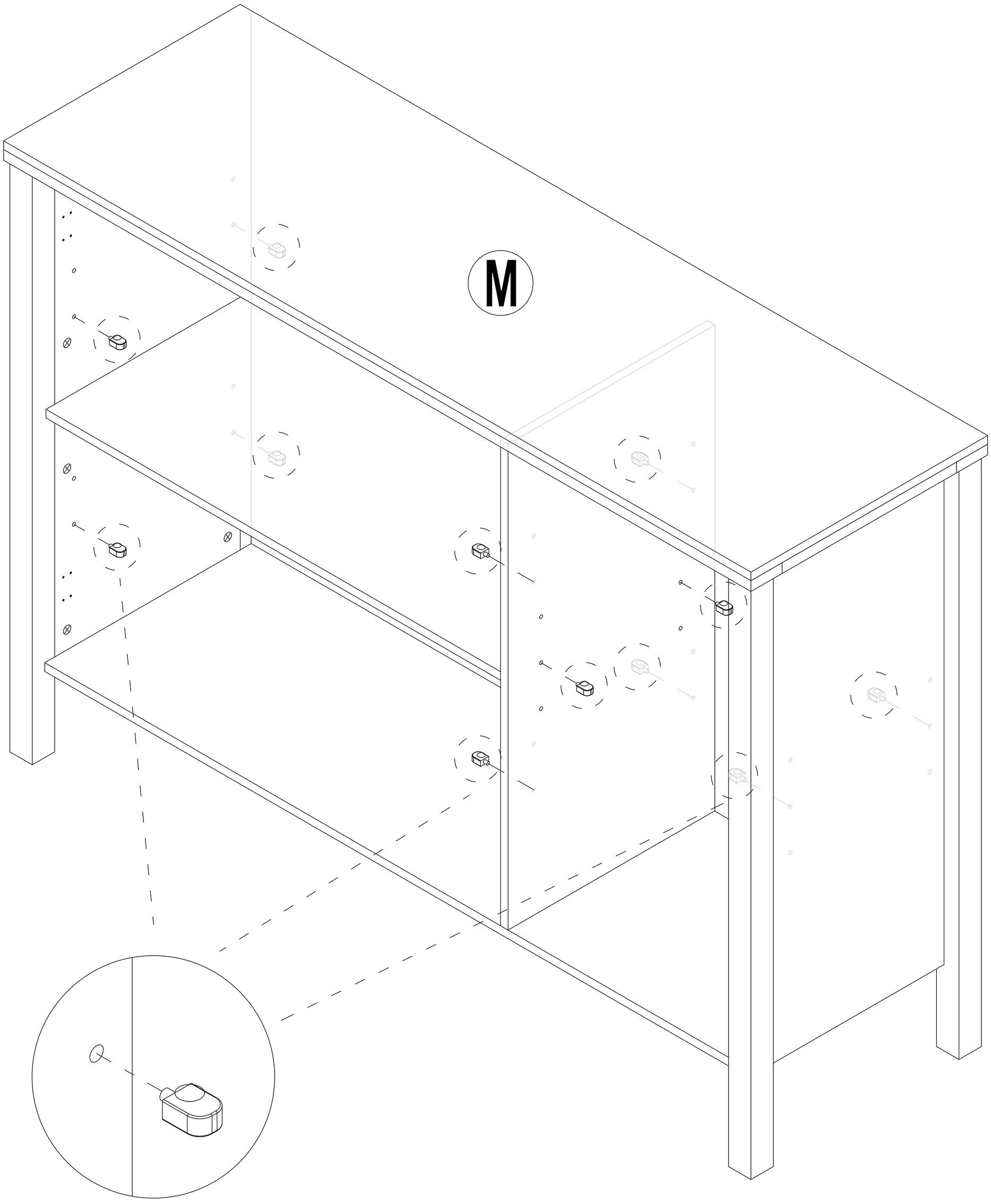

Step 25

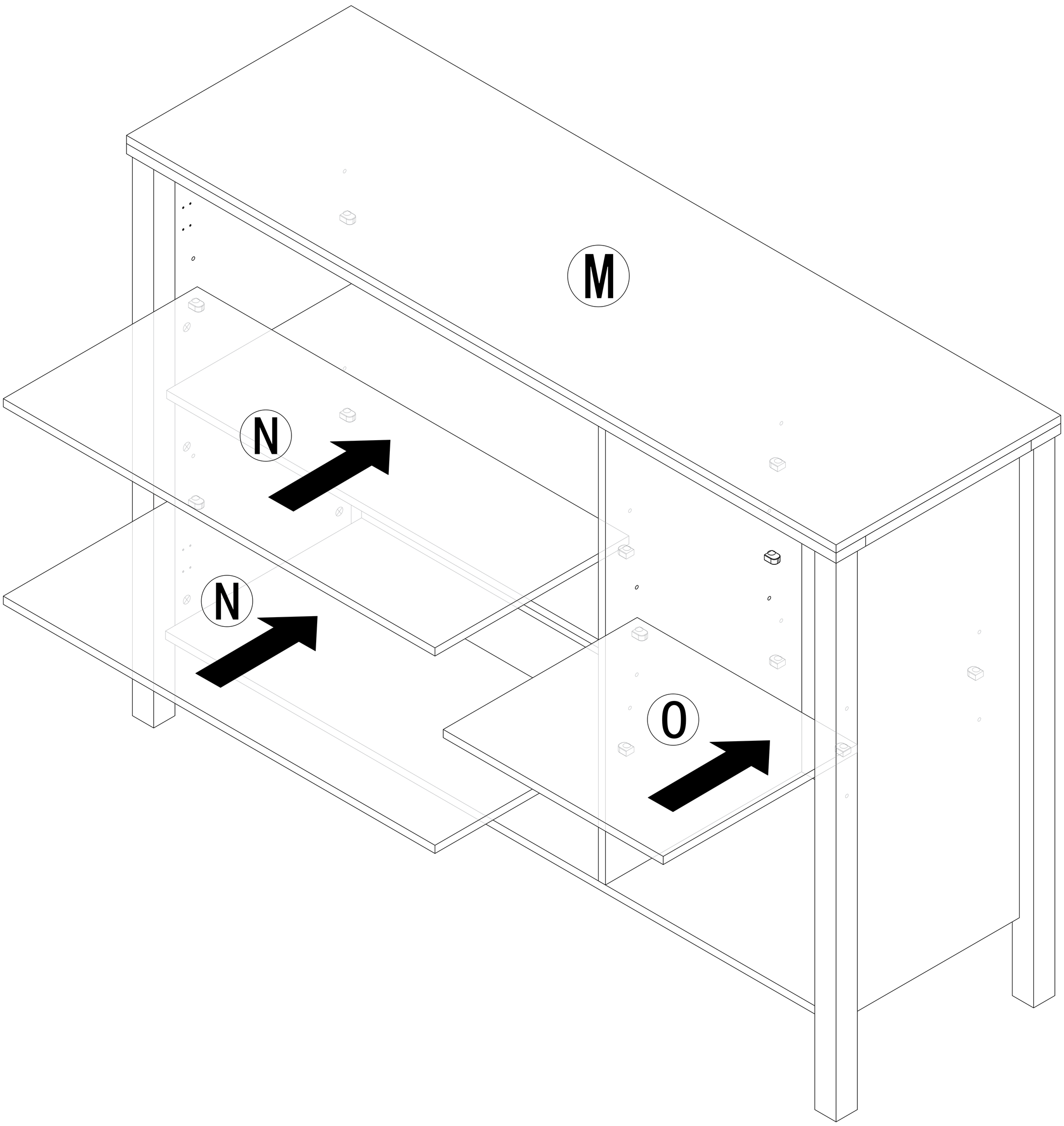

Step 26

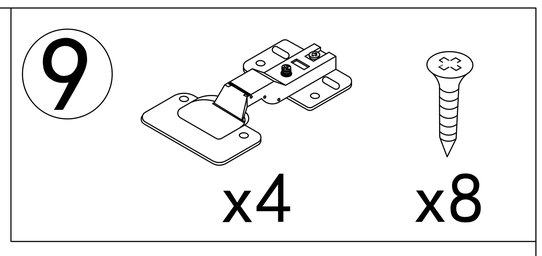

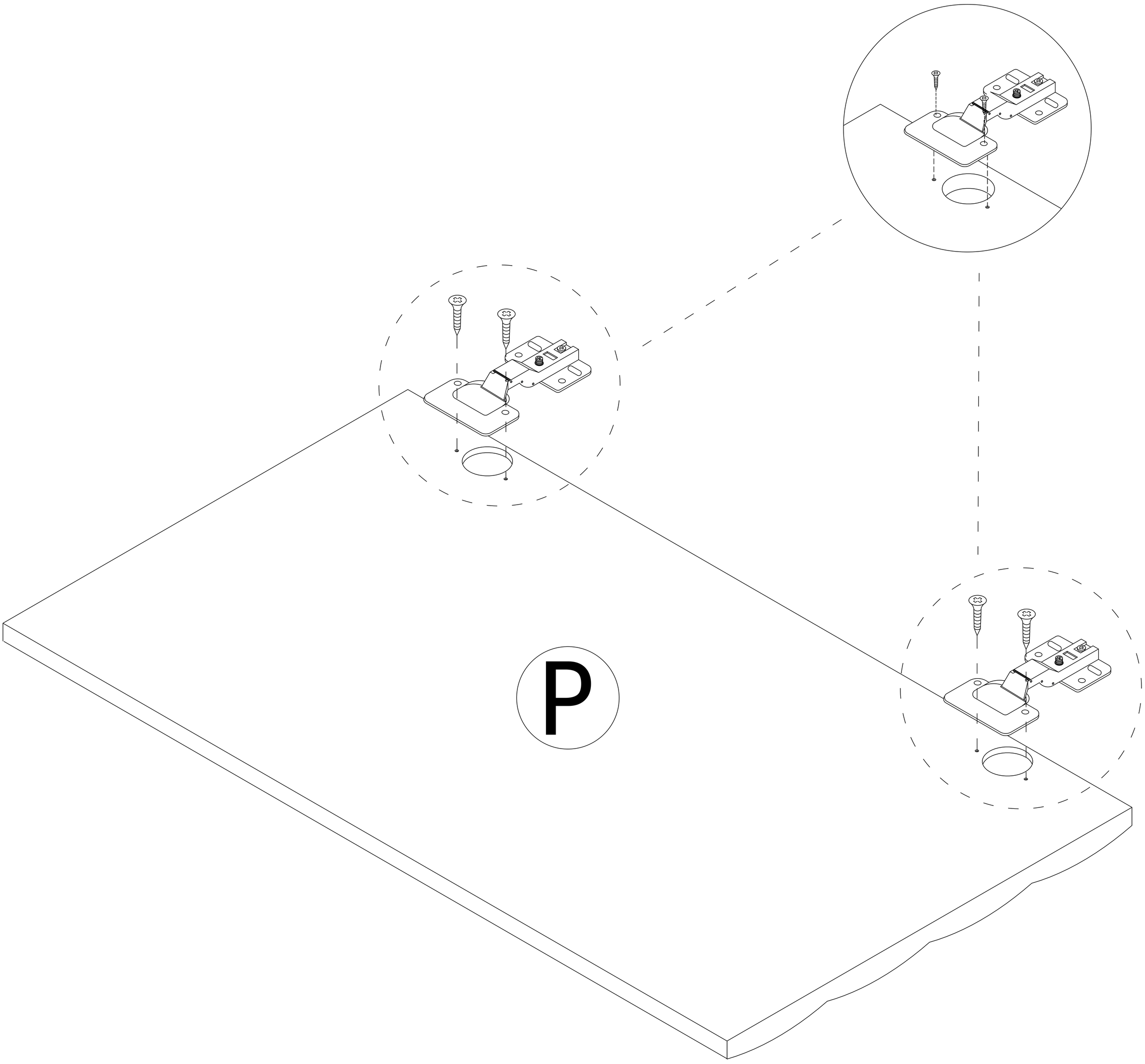

Px2

Step 27

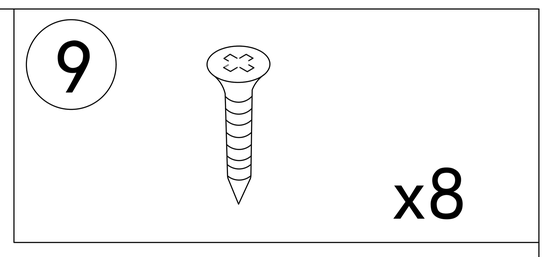

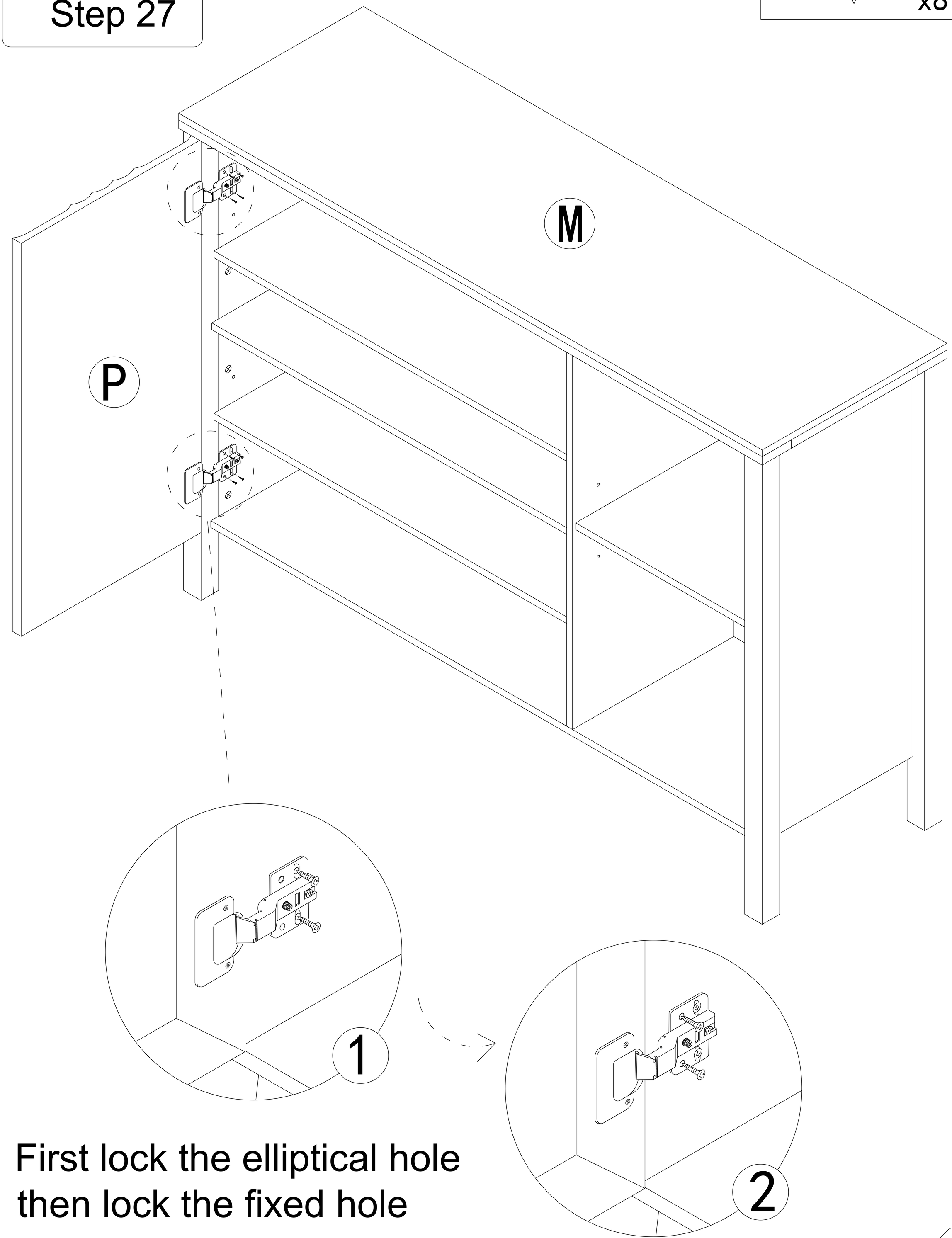

First lock the elliptical hole
then lock the fixed hole

Step 28

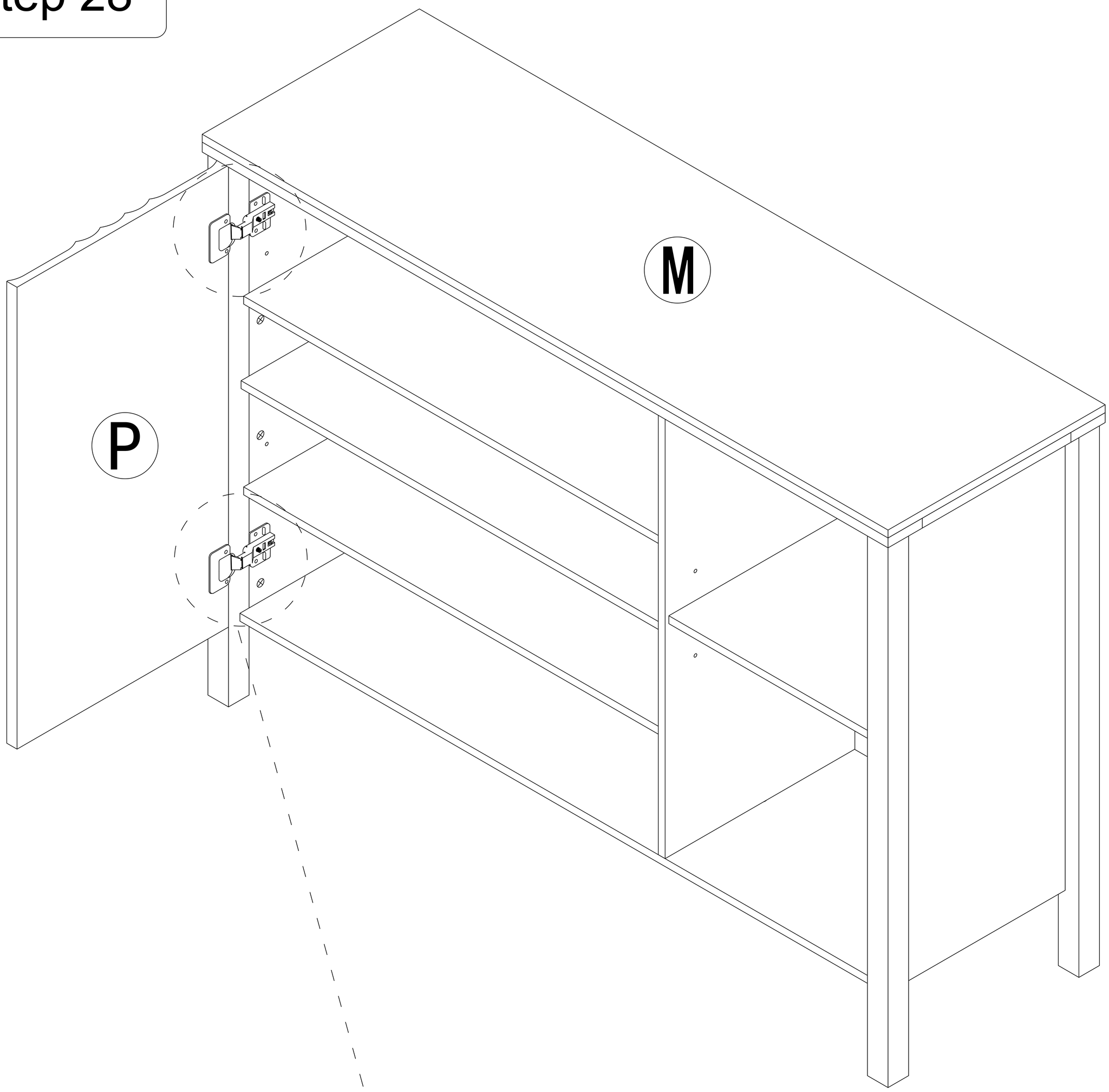

Turning this screw can effectively adjust the size of the door gap.

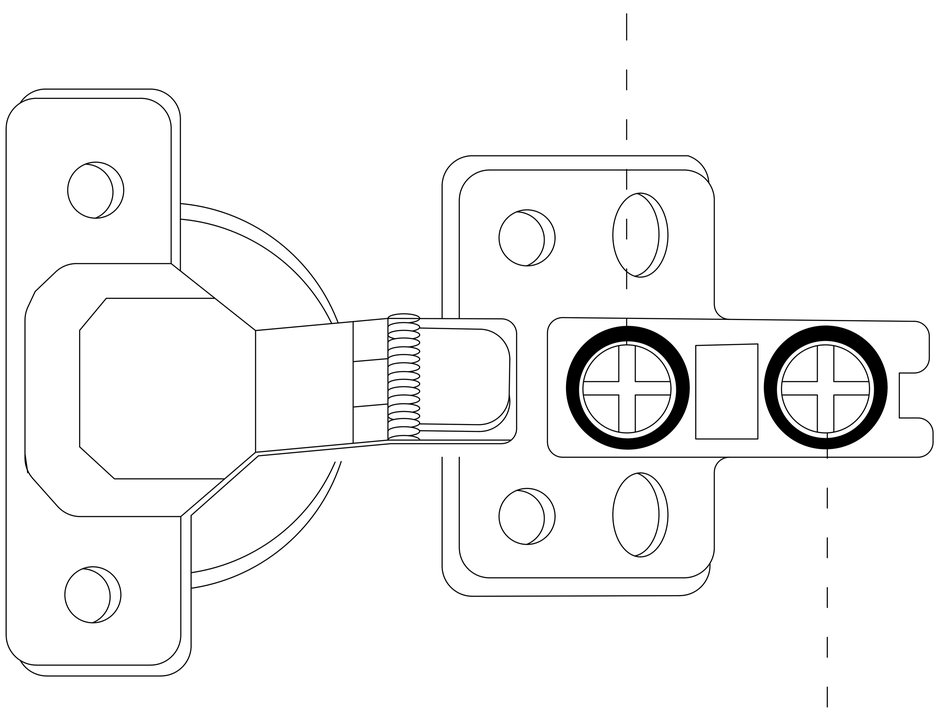

Turn this screw to adjust the door panel to be flat with the side panel.

Step 29

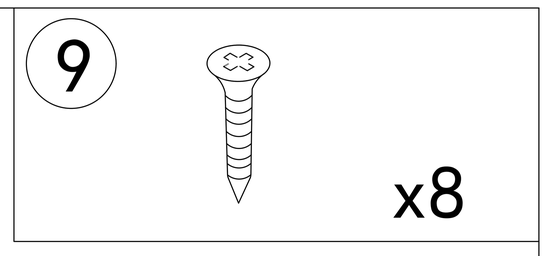

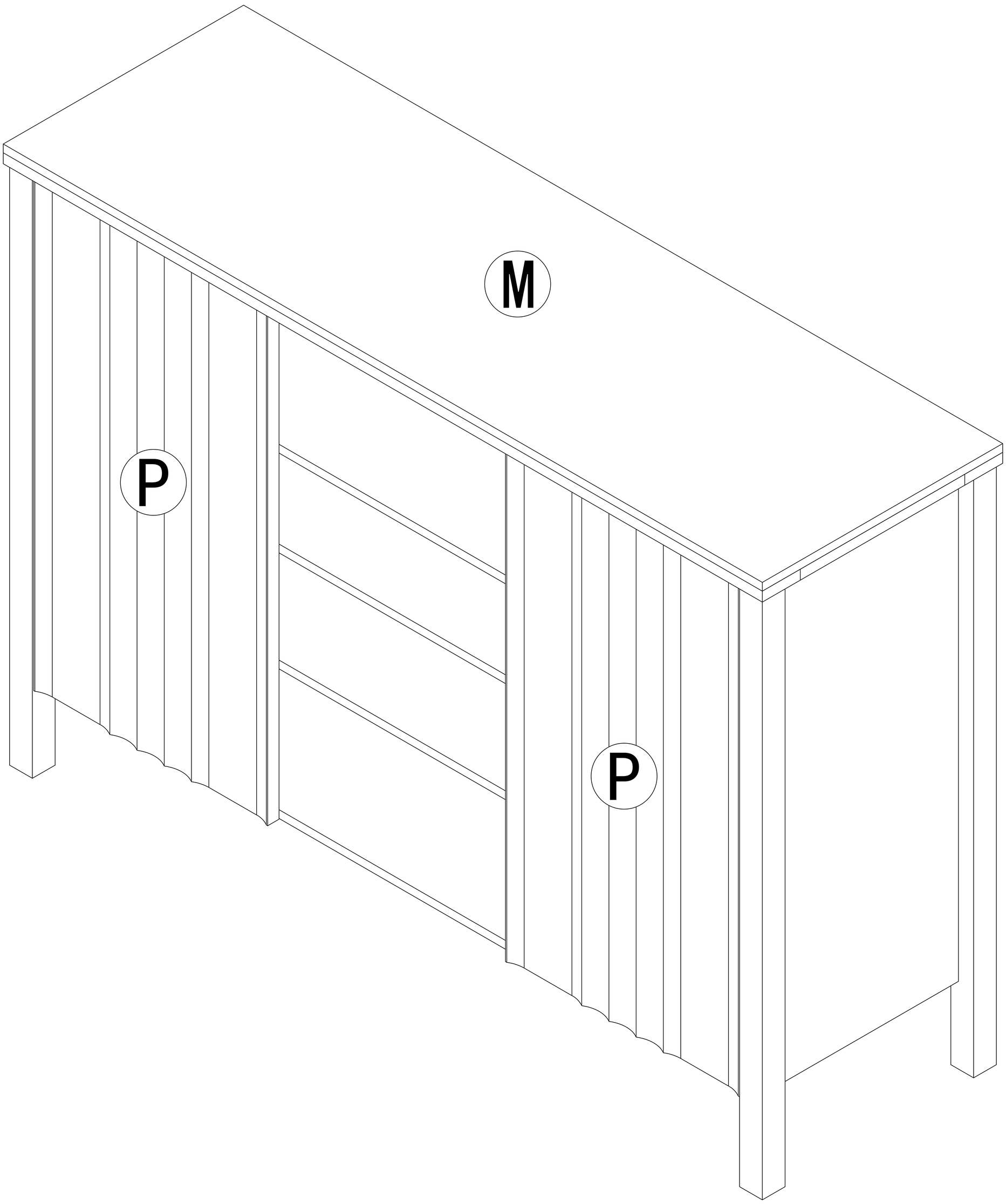

Repeat the door panel installation steps.

Step 30

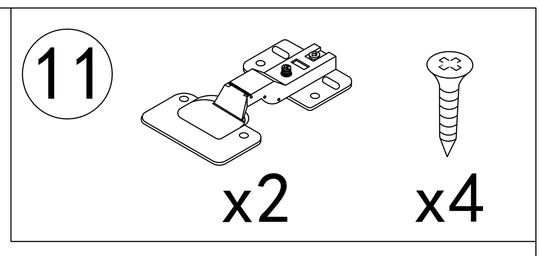

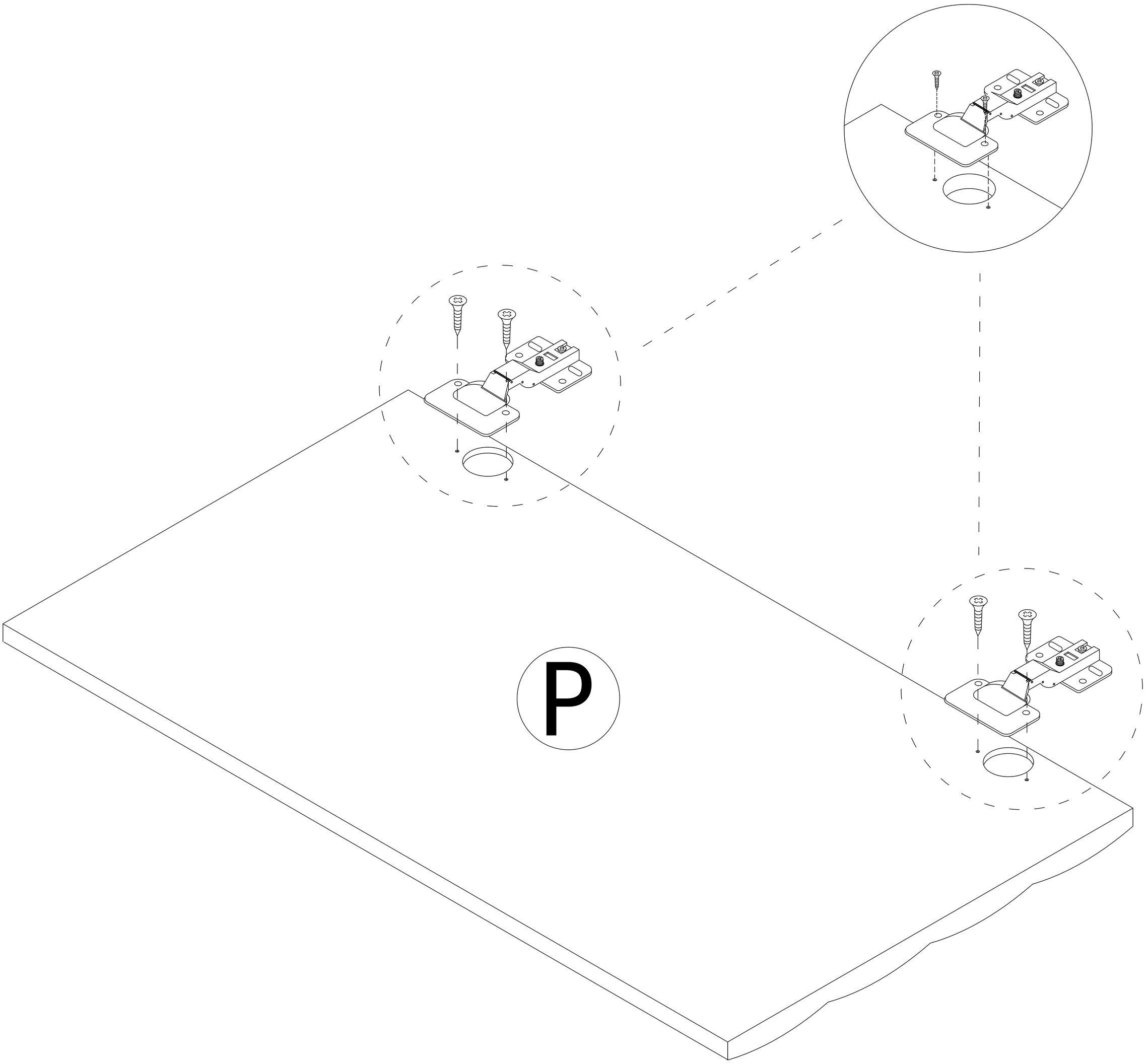

Step 31

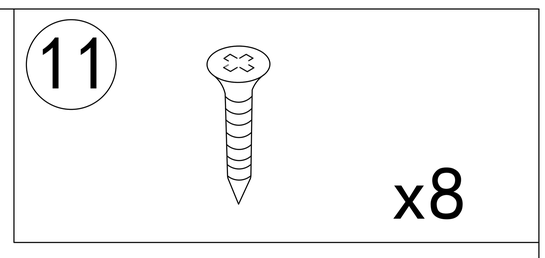

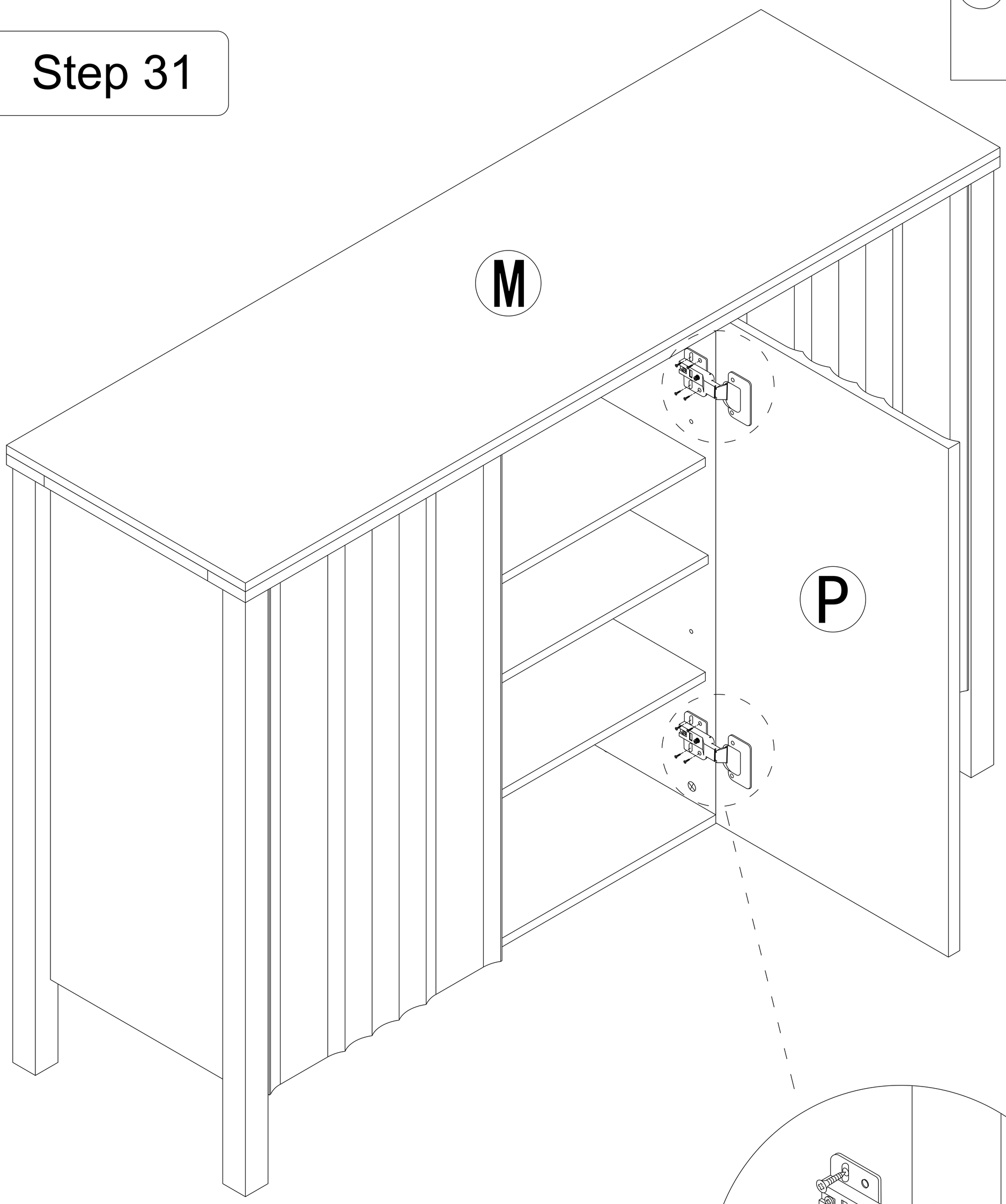

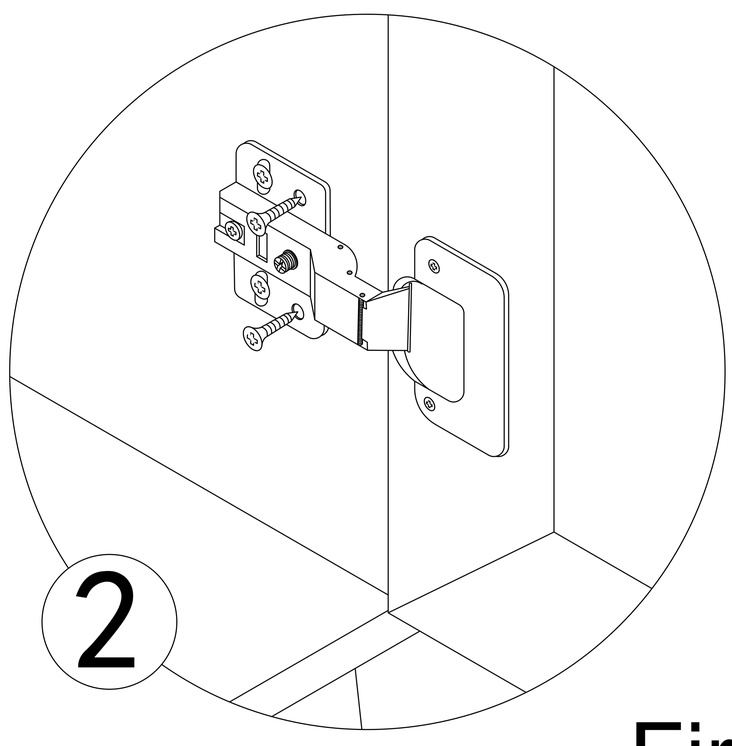

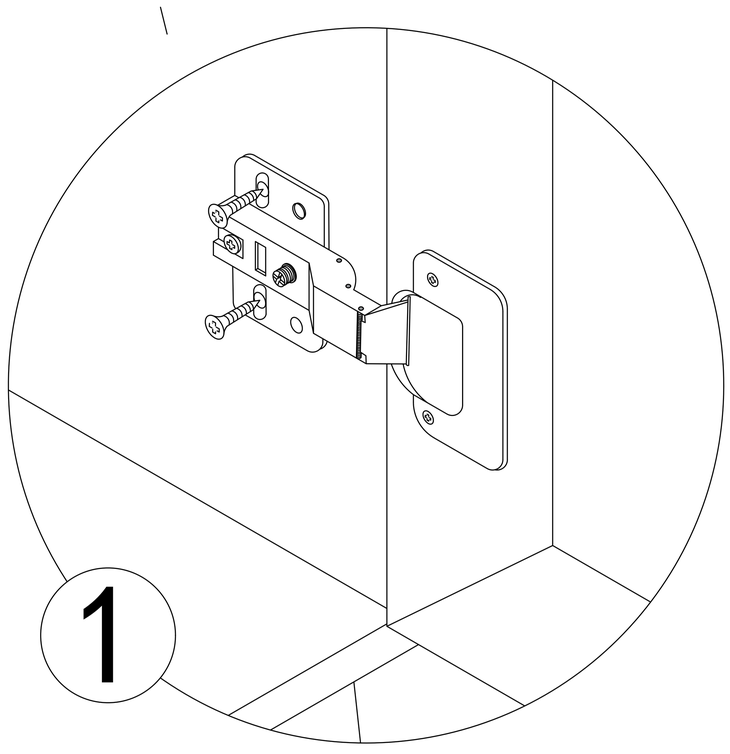

First lock the elliptical hole
then lock the fixed hole

Step 32

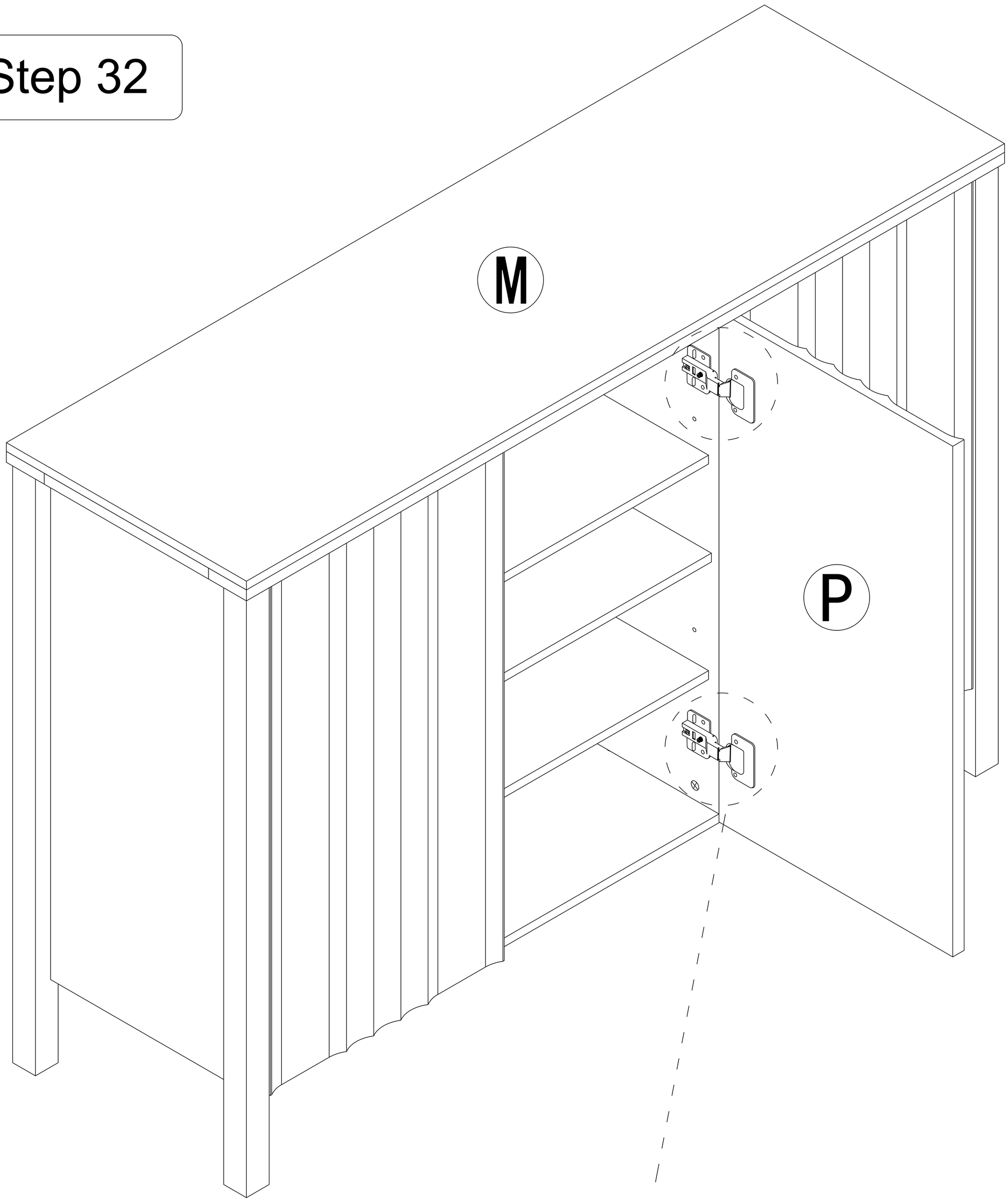

Turning this screw can effectively adjust the size of the door gap.

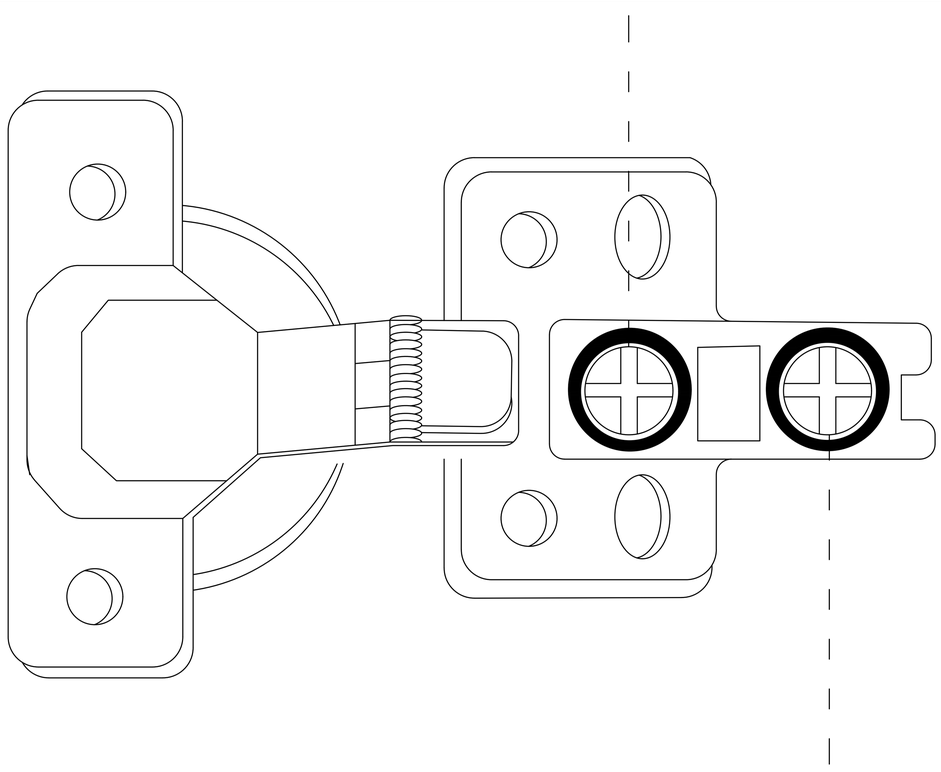

Turn this screw to adjust the door panel to be flat with the side panel.
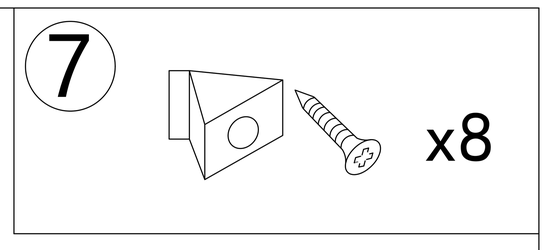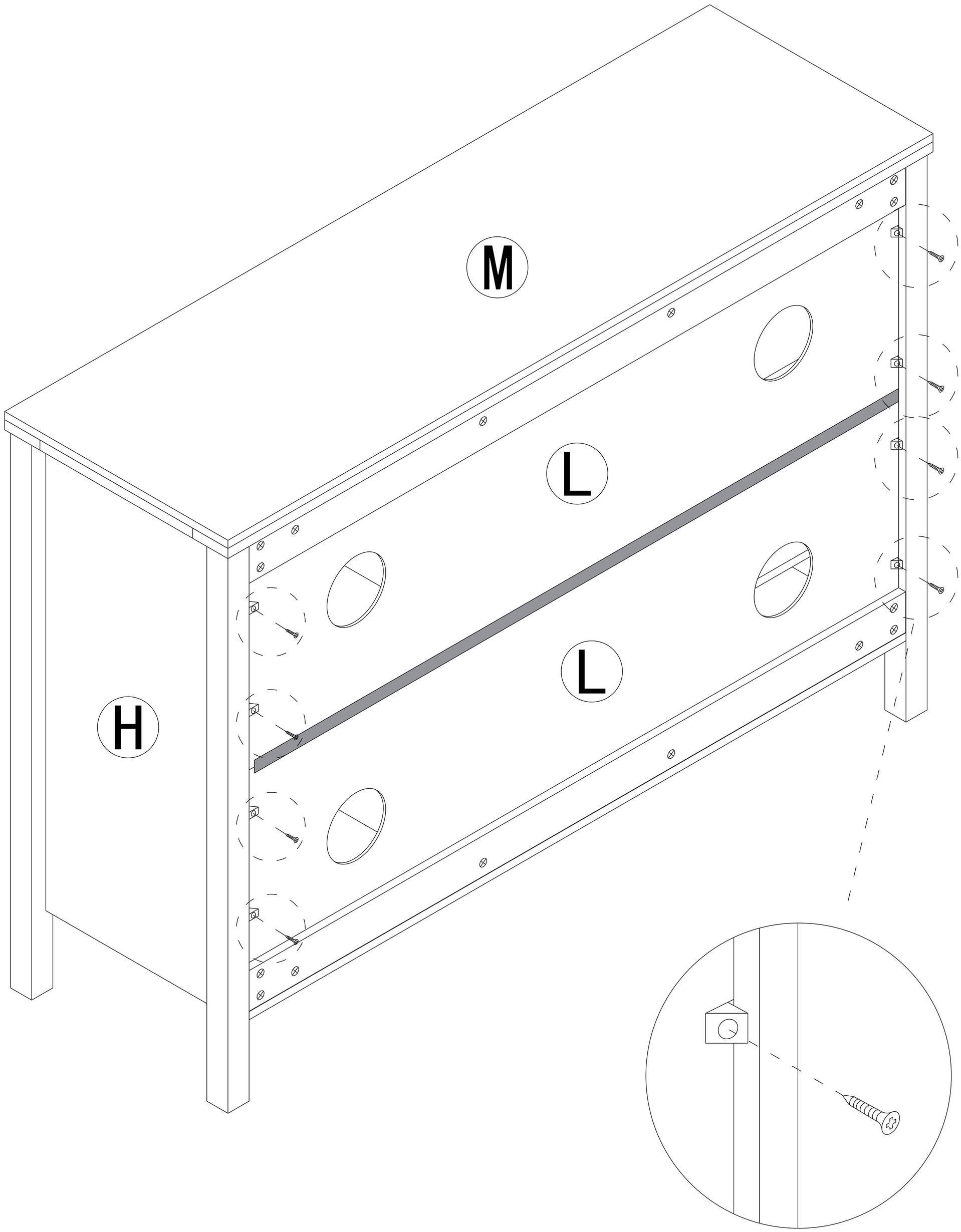
Step 33