ASSEMBLY INSTRUCTION

LOVESEAT WITH 2 PILLOWS

Legs and hardware are stored inside the box, please take them out for assembly.

Note: Do not use power tools for assembly. Power tools increase the risk of over-tightening, which may lead to splitting or cracking the wood.

COMPONENT LIST

NO	DRAWING	DESCRIPTION	QTY
A		SEAT	1 PC
B		LSF BACK CUSHION (29.5"x20.5")	1 PC
C		RSF BACK CUSHION (29.5"x20.5")	1 PC
D		SEAT CUSHION (30"x23.5")	2 PCS
E		WOODEN LEG (Ø8cm x H9cm)	4 PCS
F		WASHER (Ø5cm)	4 PCS
G		PILLOW (20"x 20")	2 PCS

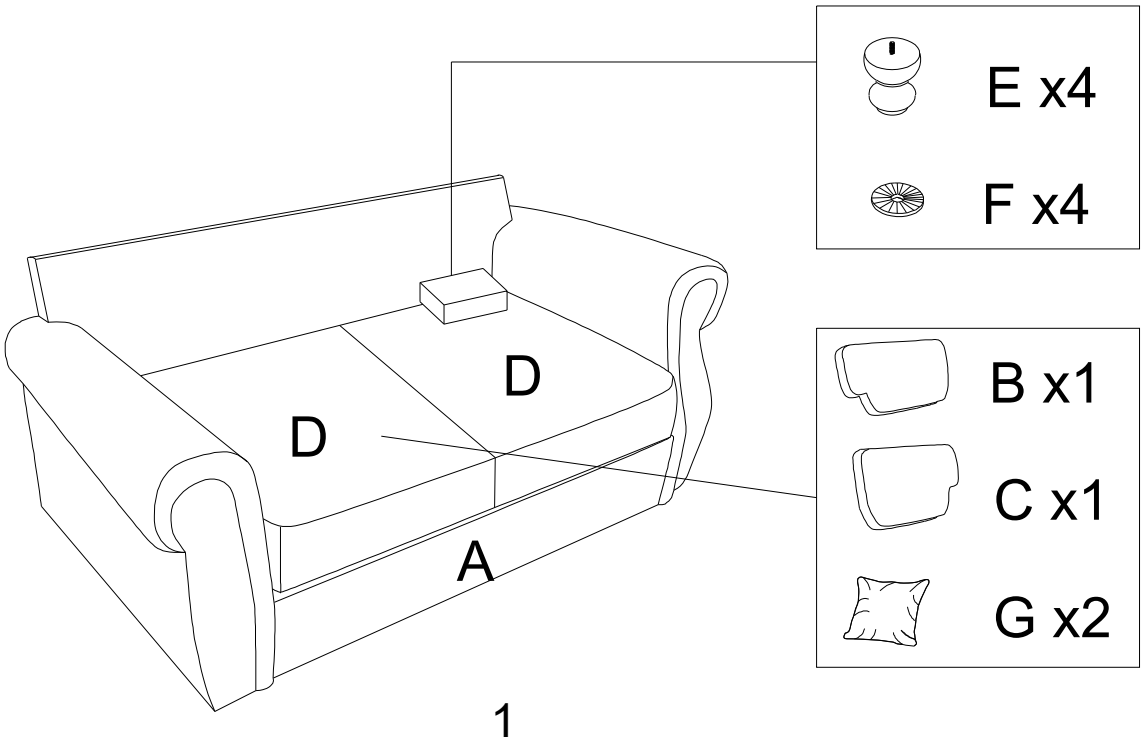

Step 1

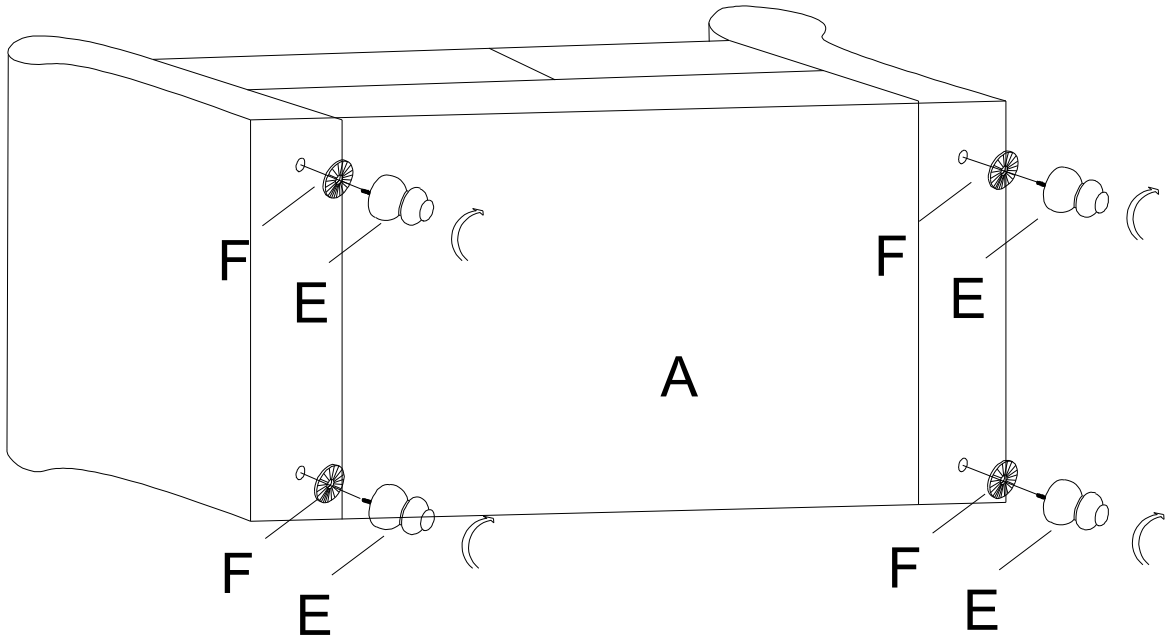

Step 2

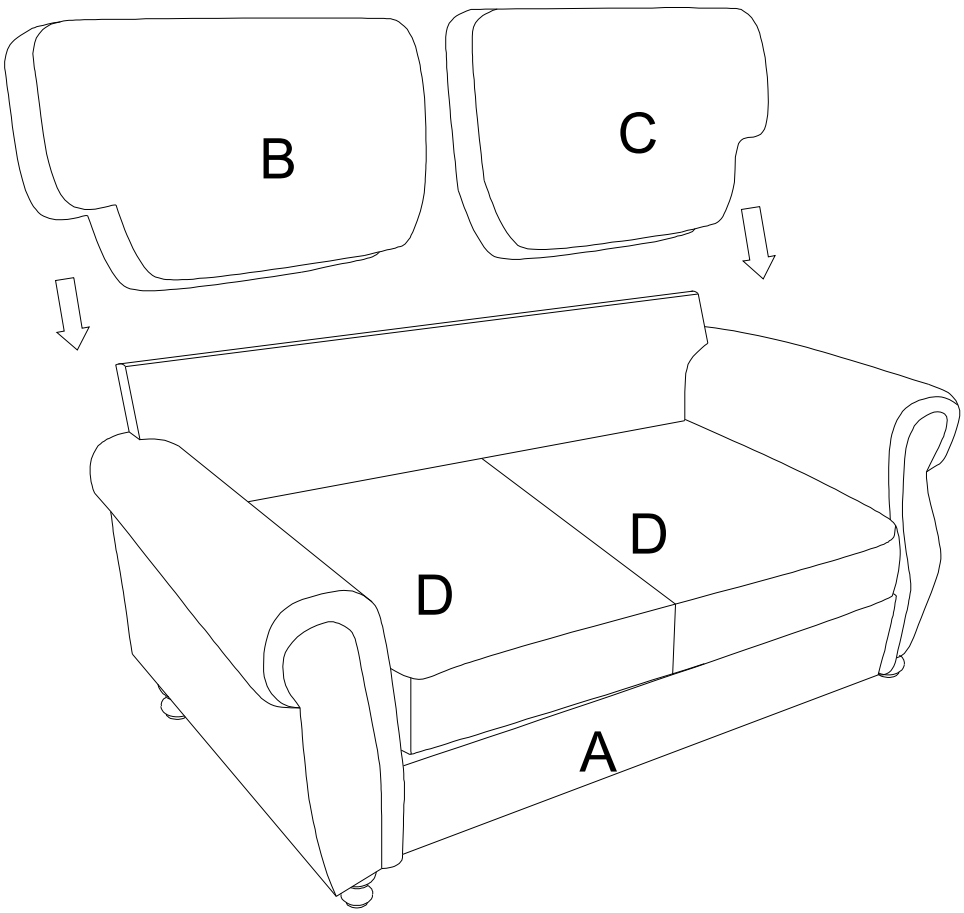

COMPLETED

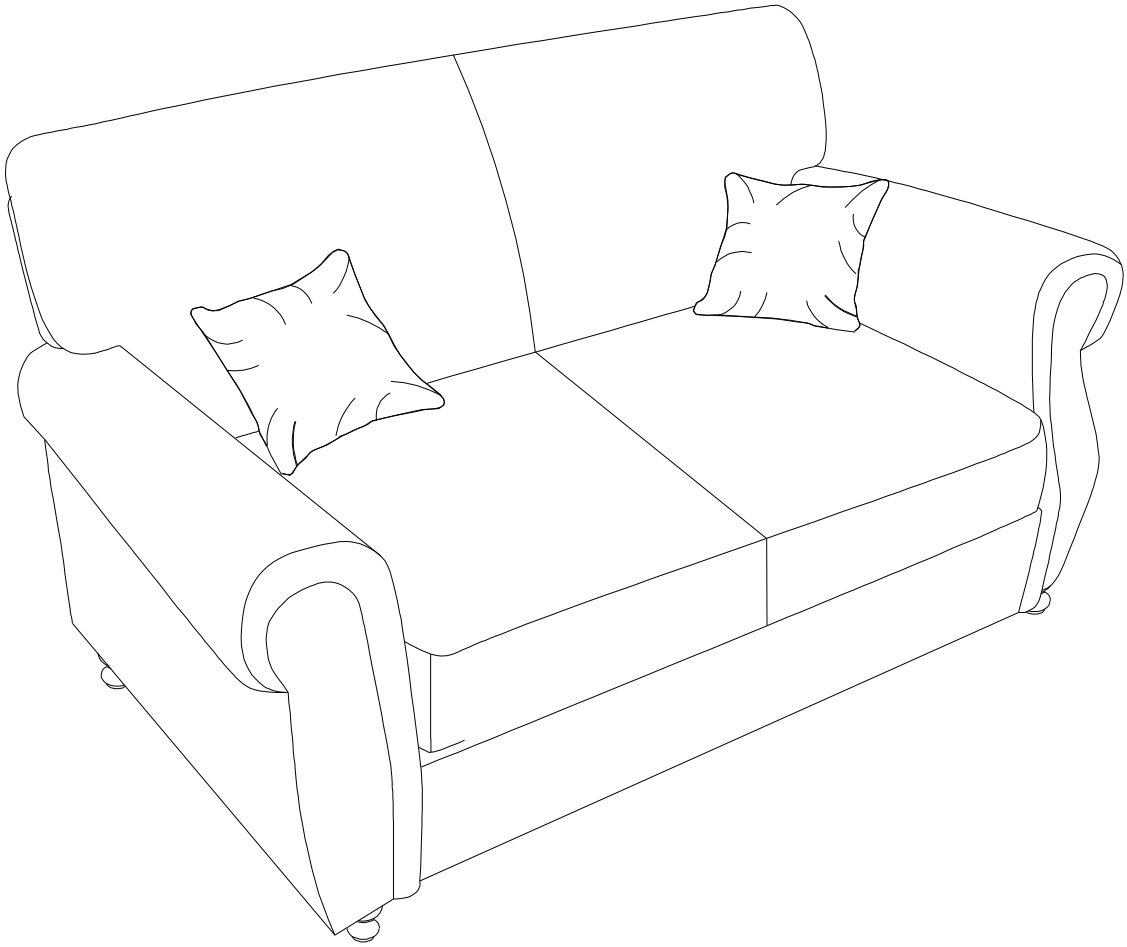

Care Instructions for Jacquard Furniture:

To maintain the original appearance of your jacquard furniture, please follow these simple care procedures:

- **Avoid exposing furniture directly to sunlight or heating and air conditioning outlets. Prolonged exposure to sunlight or heating and air conditioning outlets will cause jacquard to fade or deteriorate.**
- **Regularly vacuum or dust with a soft, dry cloth.**
- **Monitor hardware periodically. Fasteners may loosen over time. Inspect all connections regularly to ensure they remain tight. Re-tighten if necessary.**

For use on wooden floors, hard surfaces, or carpets, it is highly recommended to install protective felt pads under all legs and supports to prevent scratches, scuffs, and discoloration.

ASSEMBLY INSTRUCTION

SOFA WITH 2 PILLOWS

Legs and hardware are stored inside the box, please take them out for assembly.

Note: Do not use power tools for assembly. Power tools increase the risk of over-tightening, which may lead to splitting or cracking the wood.

COMPONENT LIST

NO	DRAWING	DESCRIPTION	QTY
A	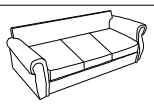	SEAT	1 PC
B		LSF BACK CUSHION (29.5"x20.5")	1 PC
C		MIDDLE BACK CUSHION (24.5"x20.5")	1 PC
D		RSF BACK CUSHION (29.5"x20.5")	1 PC
E		SEAT CUSHION (30"x23.5")	3 PCS
F		WOODEN LEG (Ø8cm x H9cm)	5 PCS
G		WASHER (Ø5cm)	5 PCS
H		PILLOW (20"x 20")	2 PCS

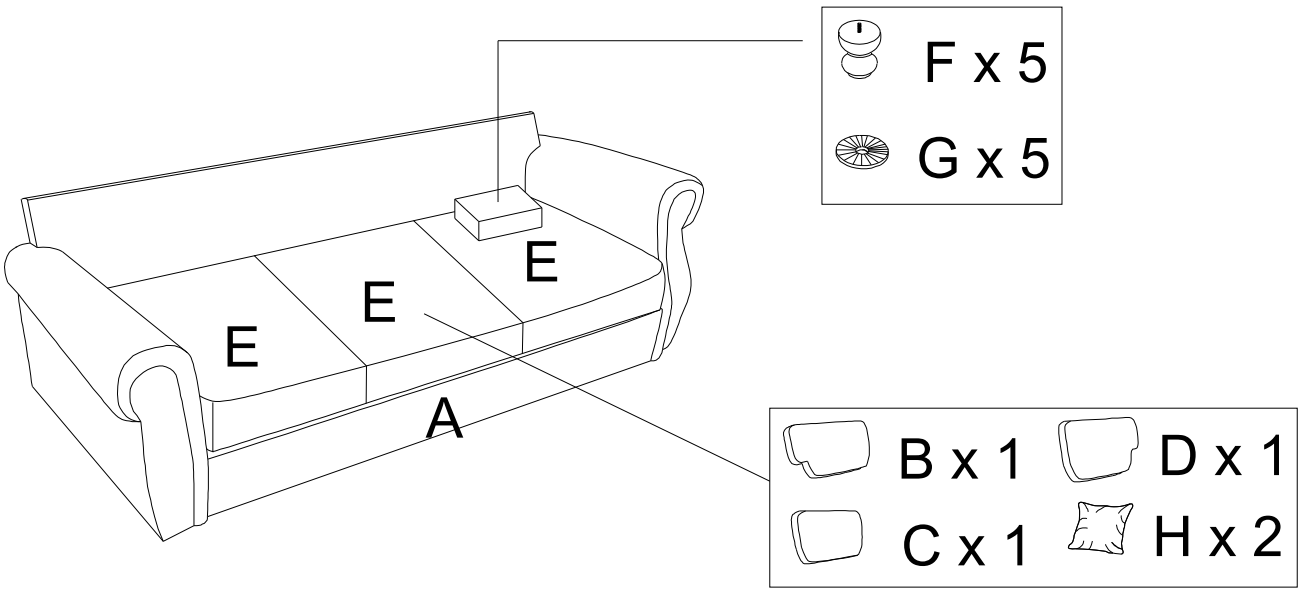

Step 1

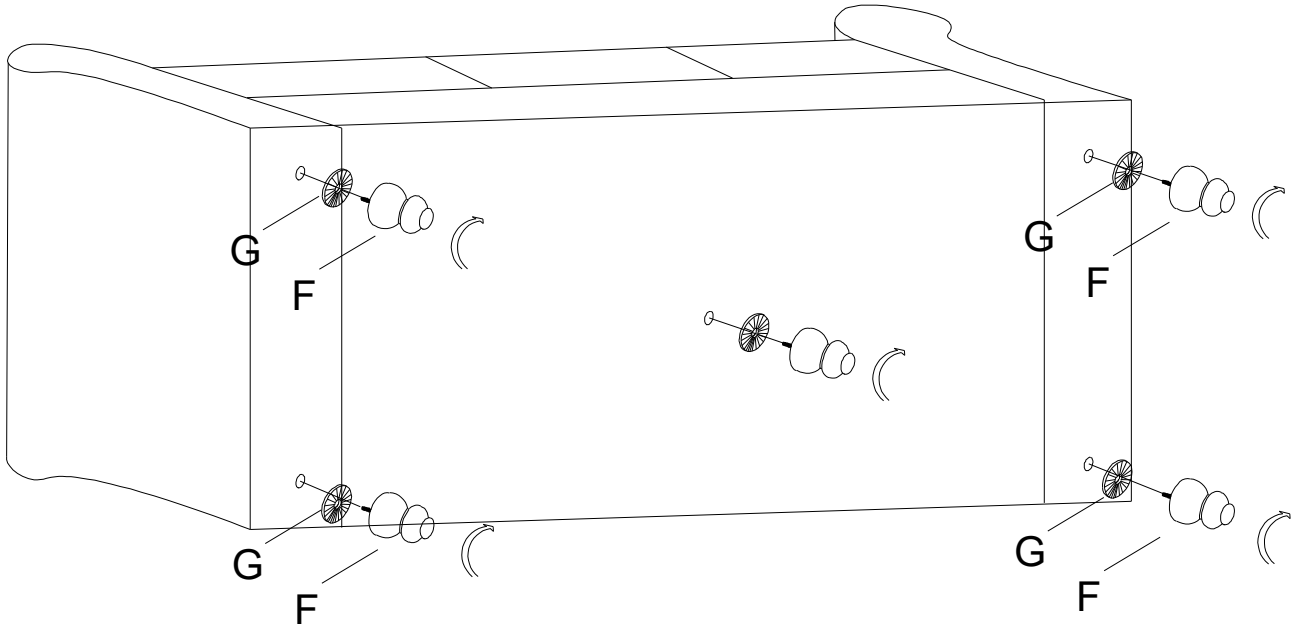

Step 2

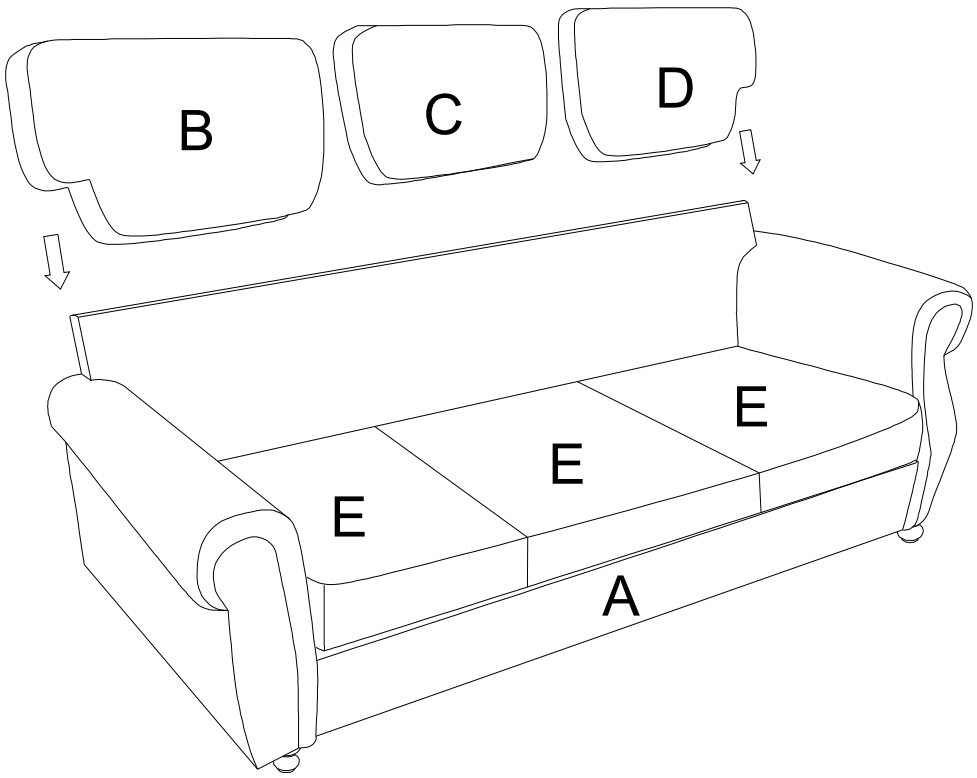

COMPLETED

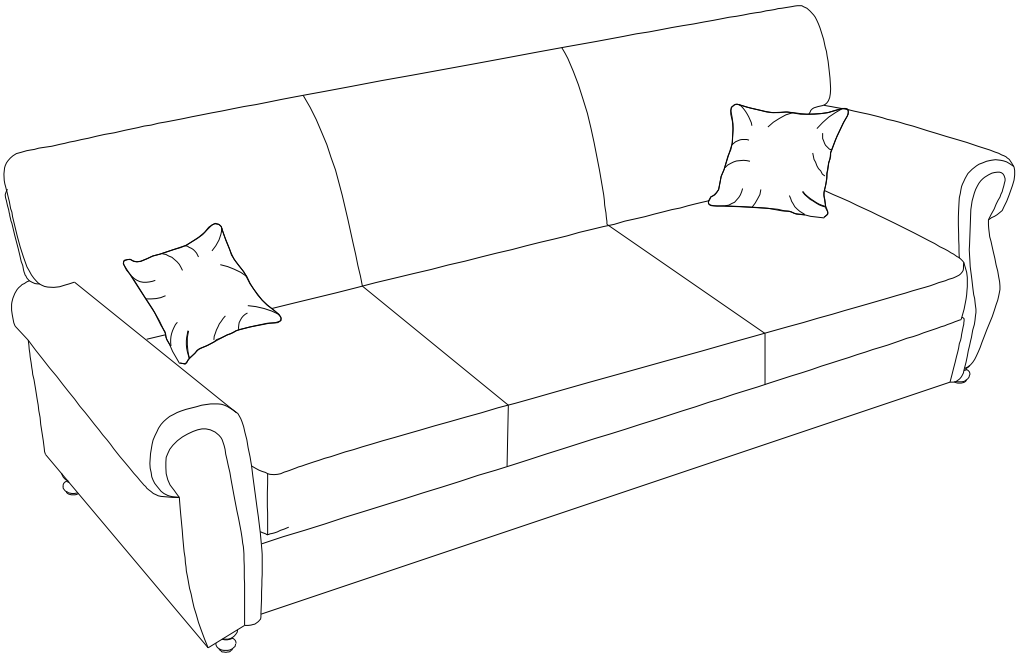

Care Instructions for Jacquard Furniture:

To maintain the original appearance of your jacquard furniture, please follow these simple care procedures:

- **Avoid exposing furniture directly to sunlight or heating and air conditioning outlets. Prolonged exposure to sunlight or heating and air conditioning outlets will cause jacquard to fade or deteriorate.**
- **Regularly vacuum or dust with a soft, dry cloth.**
- **Monitor hardware periodically. Fasteners may loosen over time. Inspect all connections regularly to ensure they remain tight. Re-tighten if necessary.**

For use on wooden floors, hard surfaces, or carpets, it is highly recommended to install protective felt pads under all legs and supports to prevent scratches, scuffs, and discoloration.