ASSEMBLY INSTRUCTIONS

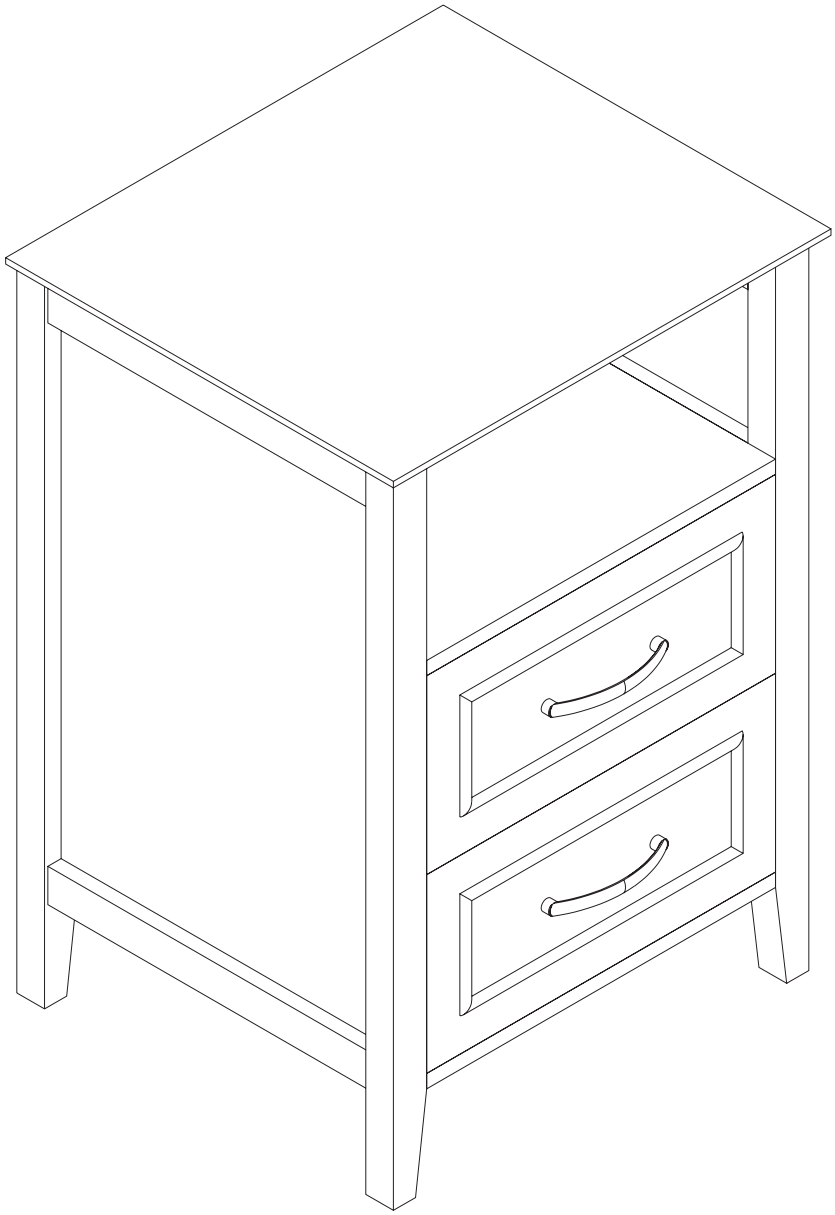

Revision: 202510

Parts

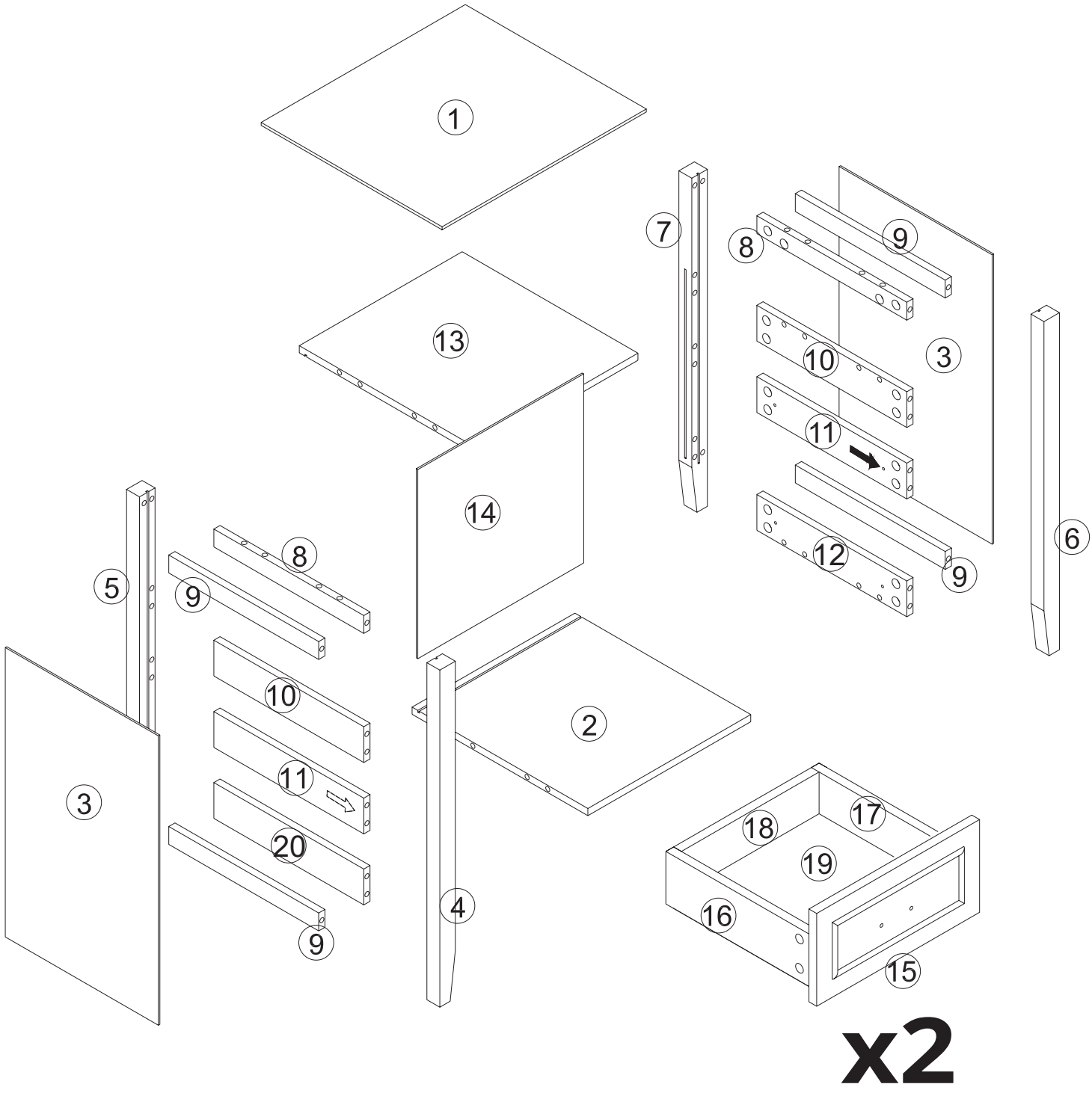

IMPORTANT

1. Do not tighten bolts/screws completely until all bolts/screws are lined up and inserted into holes.

2. Do not over-tighten screws and bolts to avoid stripping.

3. Please use hand tools to assemble this product. Do not use power tools.

Hardware

☐ 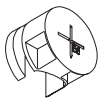 A x56

☐  B x56

☐ 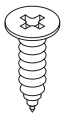 C x16

☐ 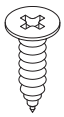 E x 5

☐  G x 4

☐ 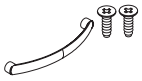 H x 2

☐ 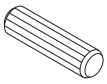 O x 20

☐ 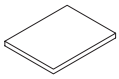 T x 4

☐ 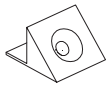 W x 4

☐  X x1

☐ 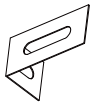 Y x 1

☐ 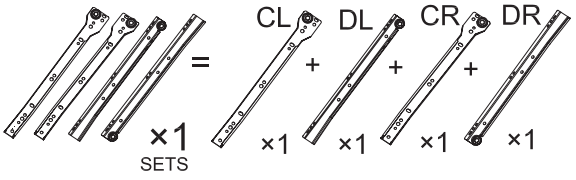

N x2

Before discarding the packaging, please use the checklist to ensure you have all the parts required to assemble your product. Please kindly note you will need the original package if you want to return the product later.

If parts are missing or damaged, we will gladly ship your replacements parts free of charge.

×2 120 mins ×1

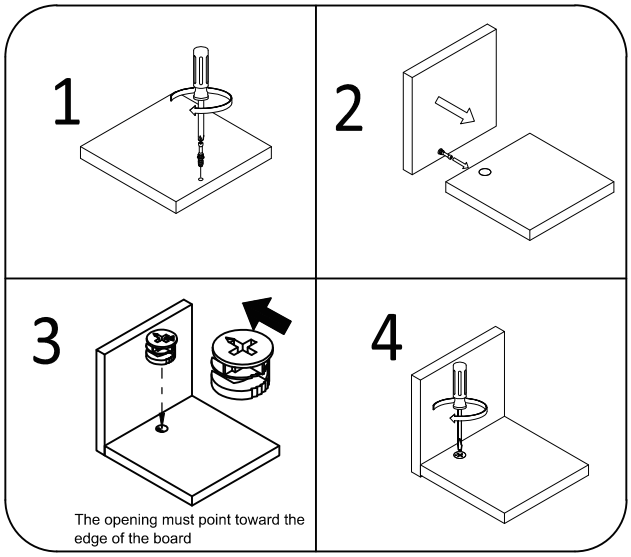

Step 1

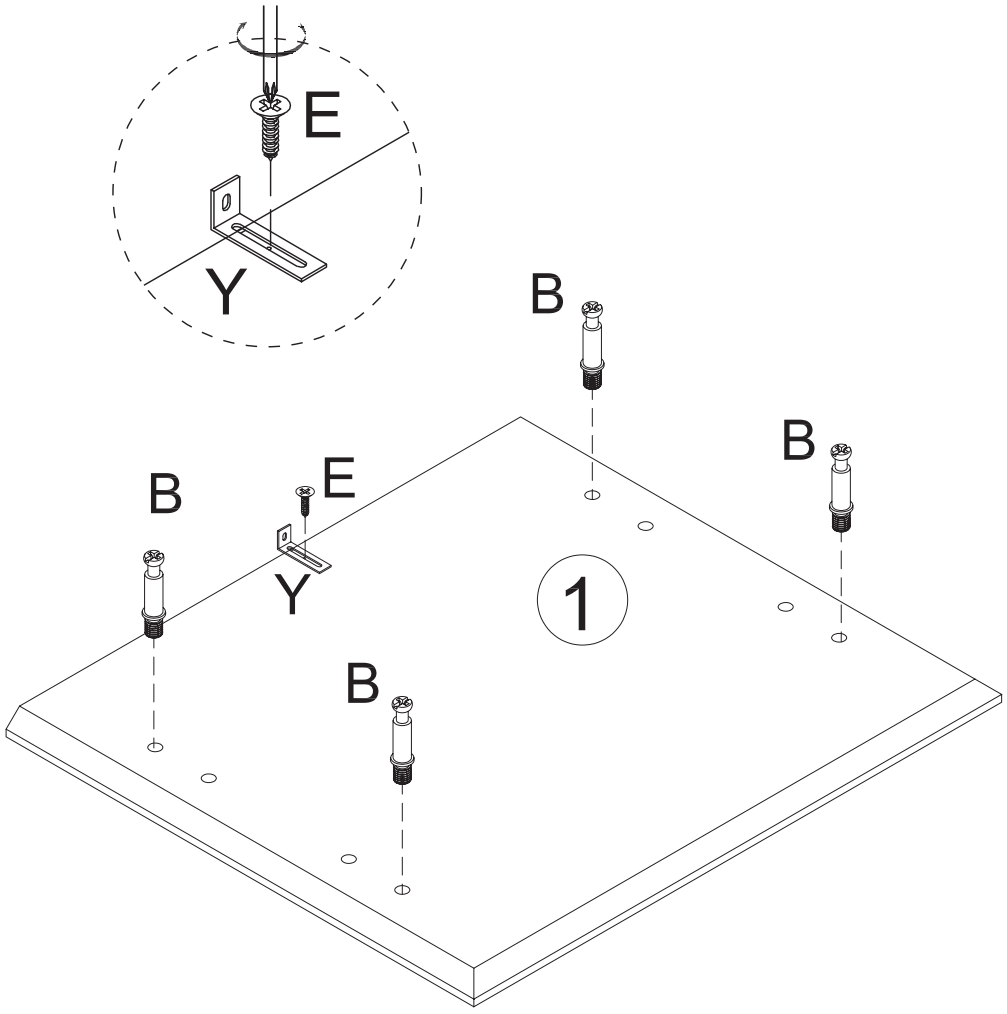

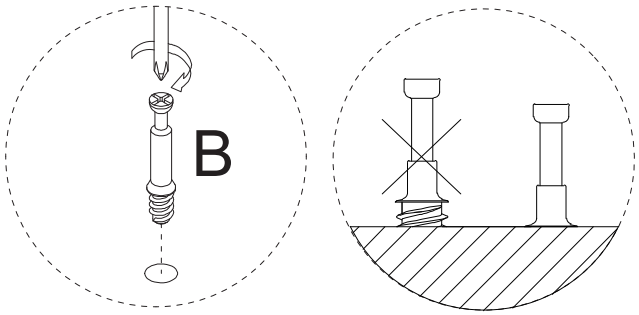

B X4

Y X1

E X1

Step 2

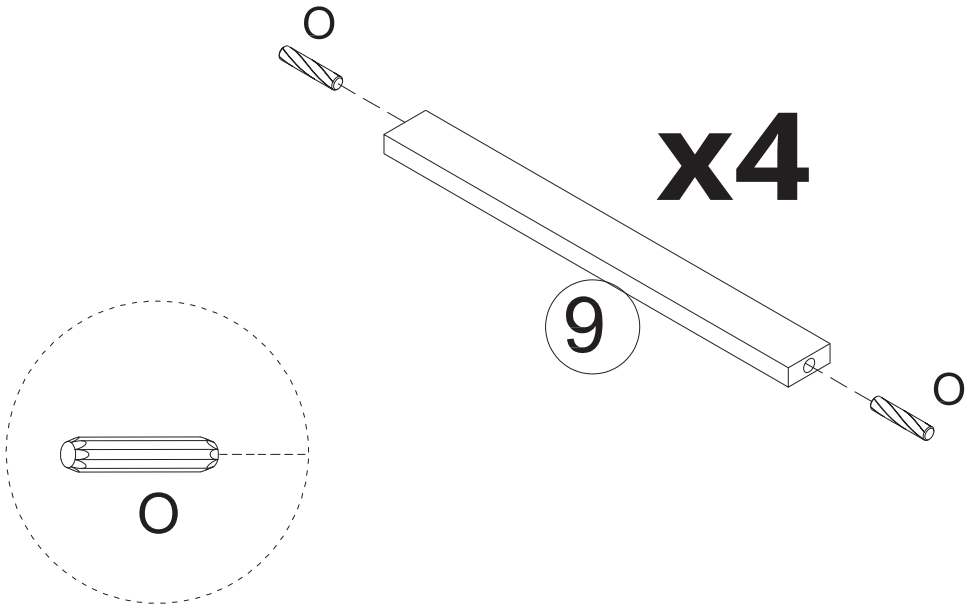

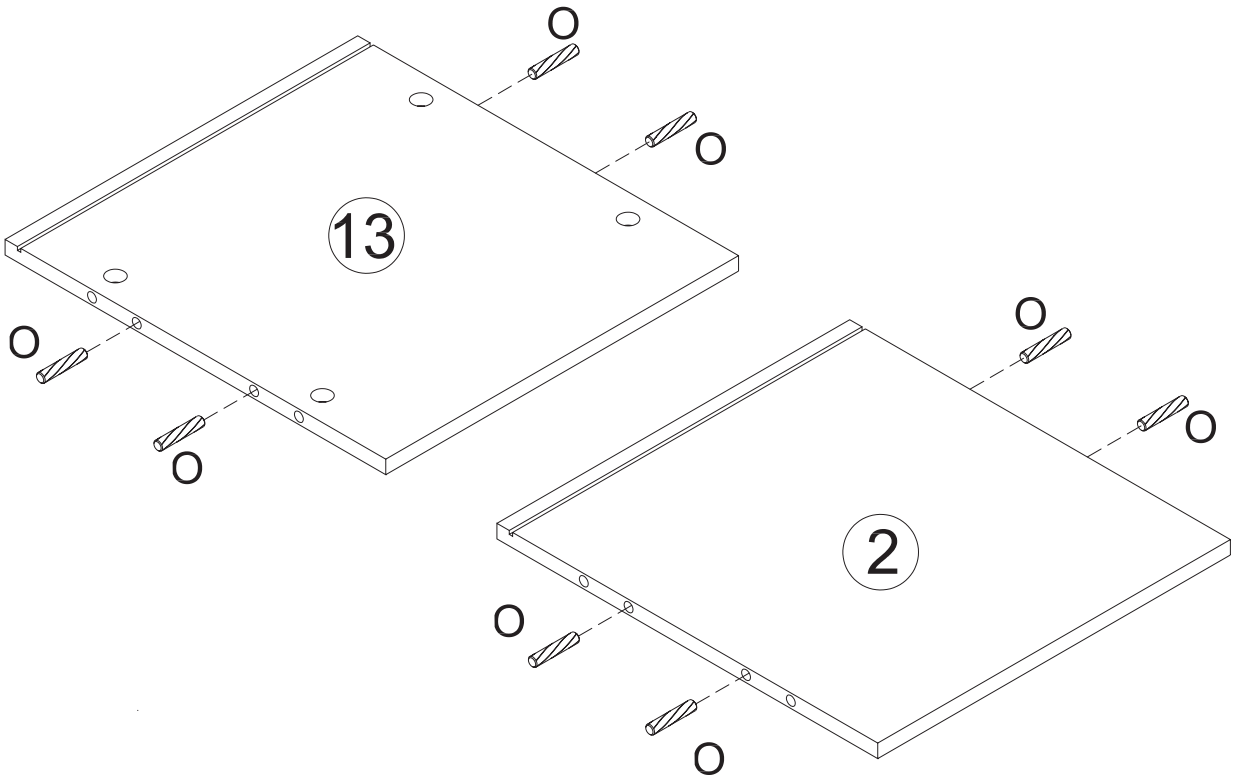

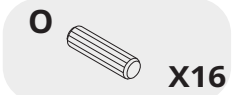

Step 3

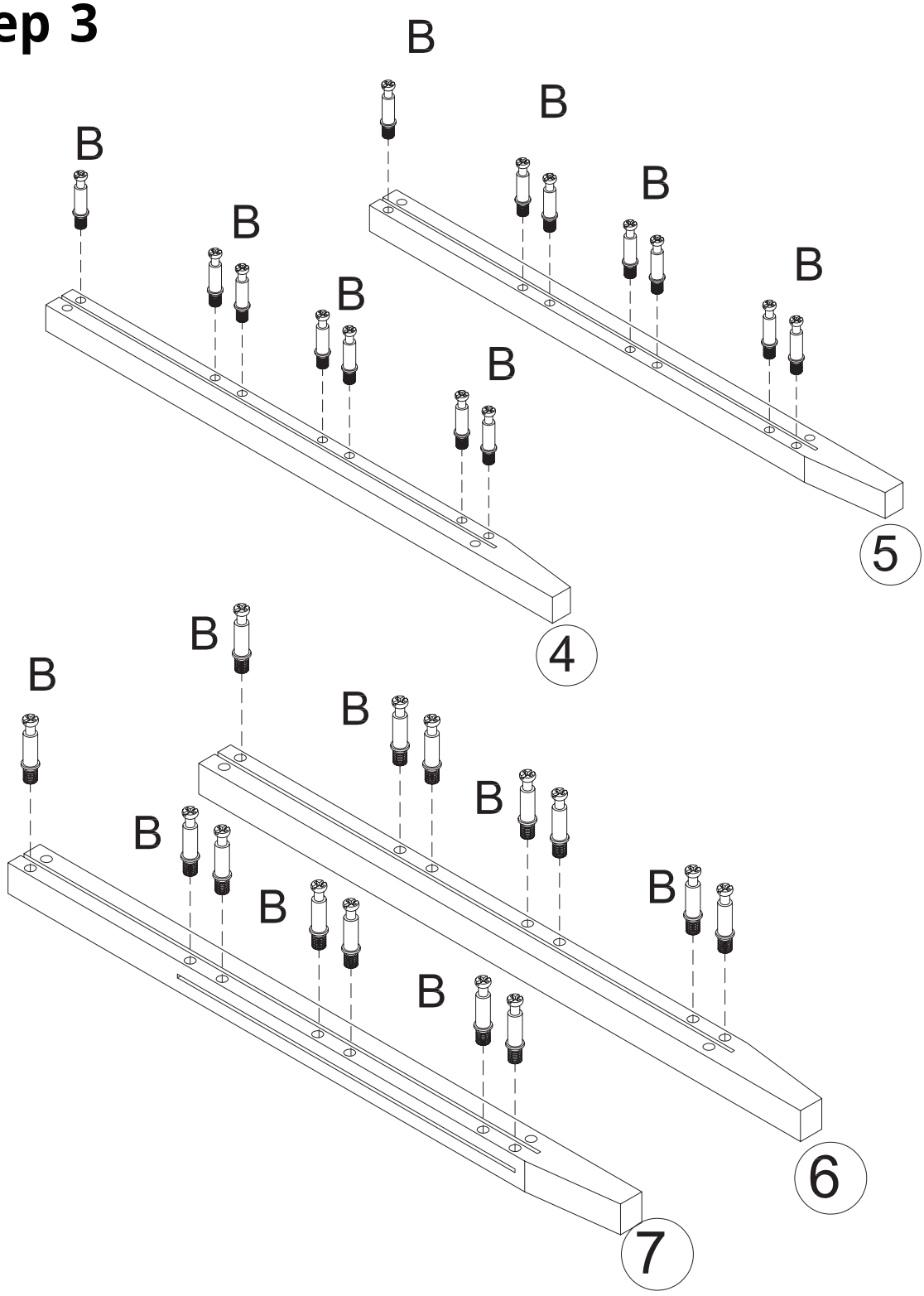

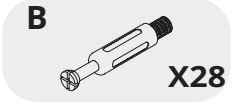

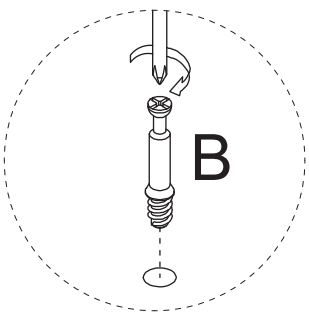

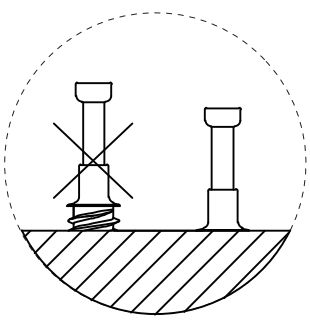

Step 4

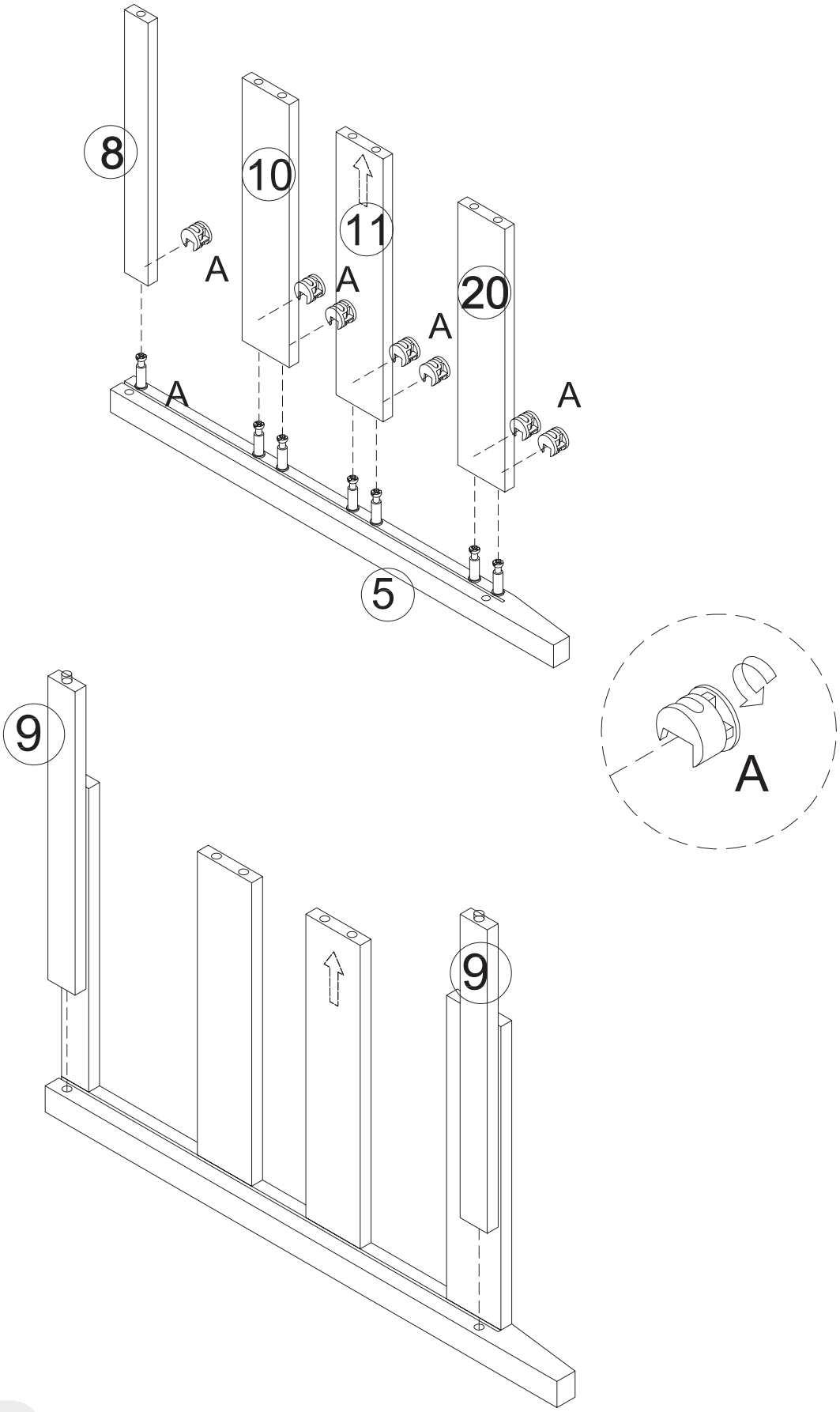



Step 5

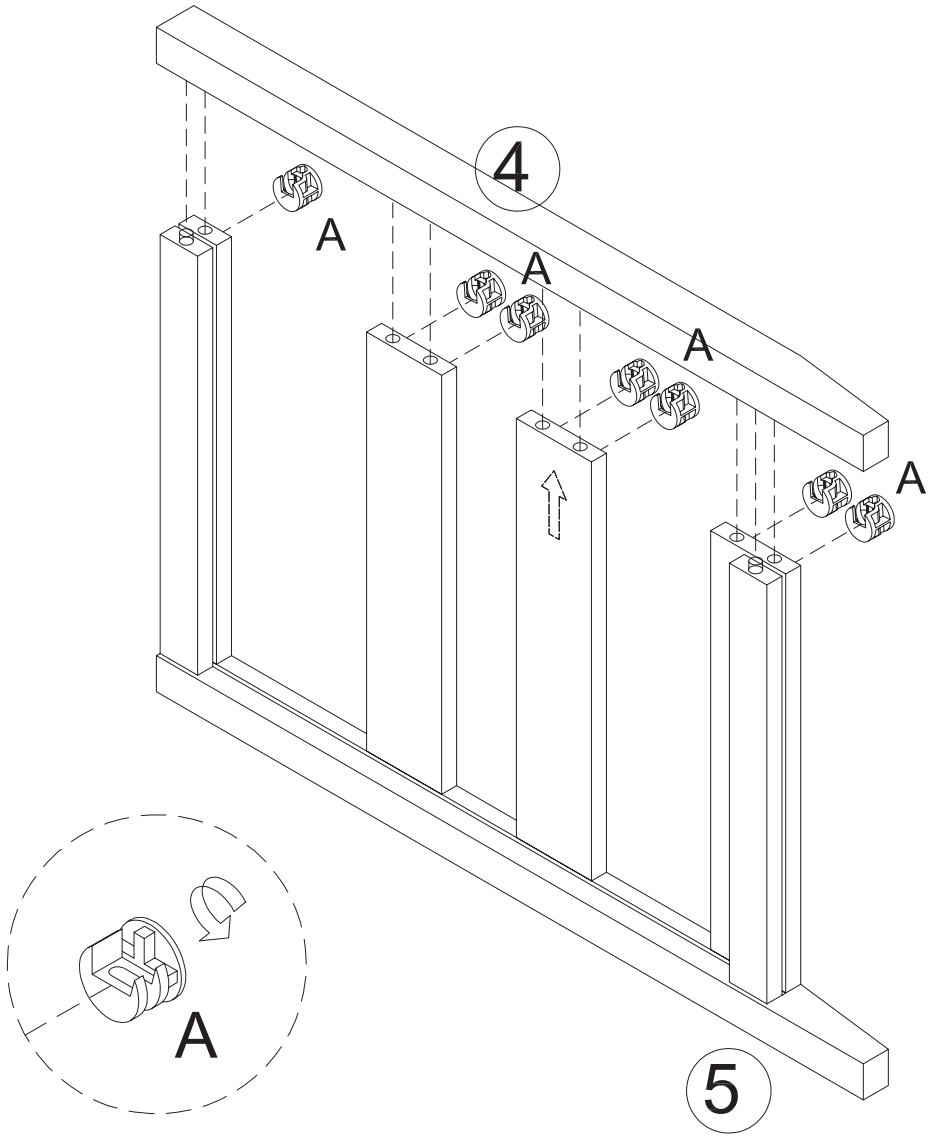

A  **X7**

Step 6

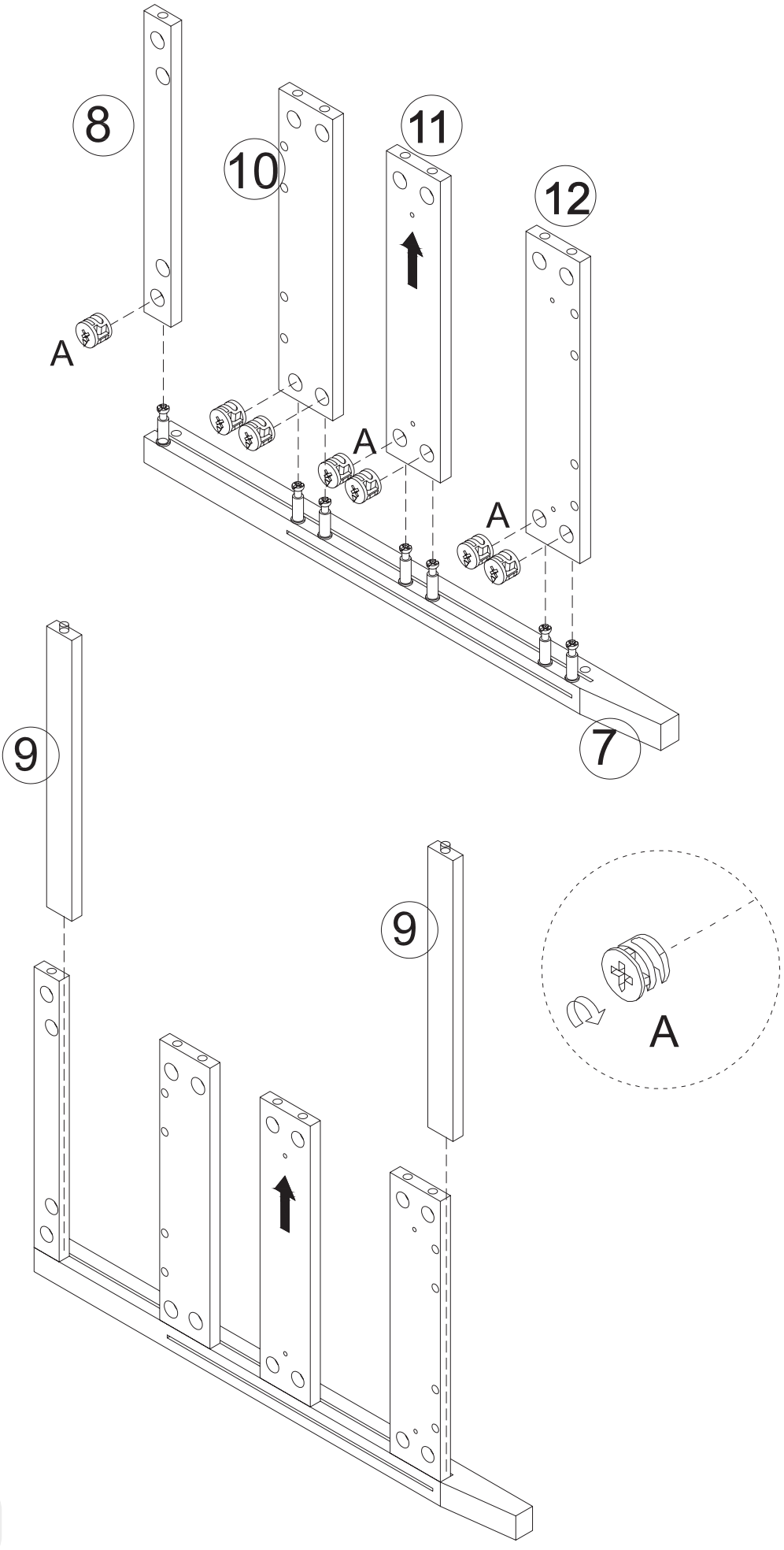

A X7

Step 7

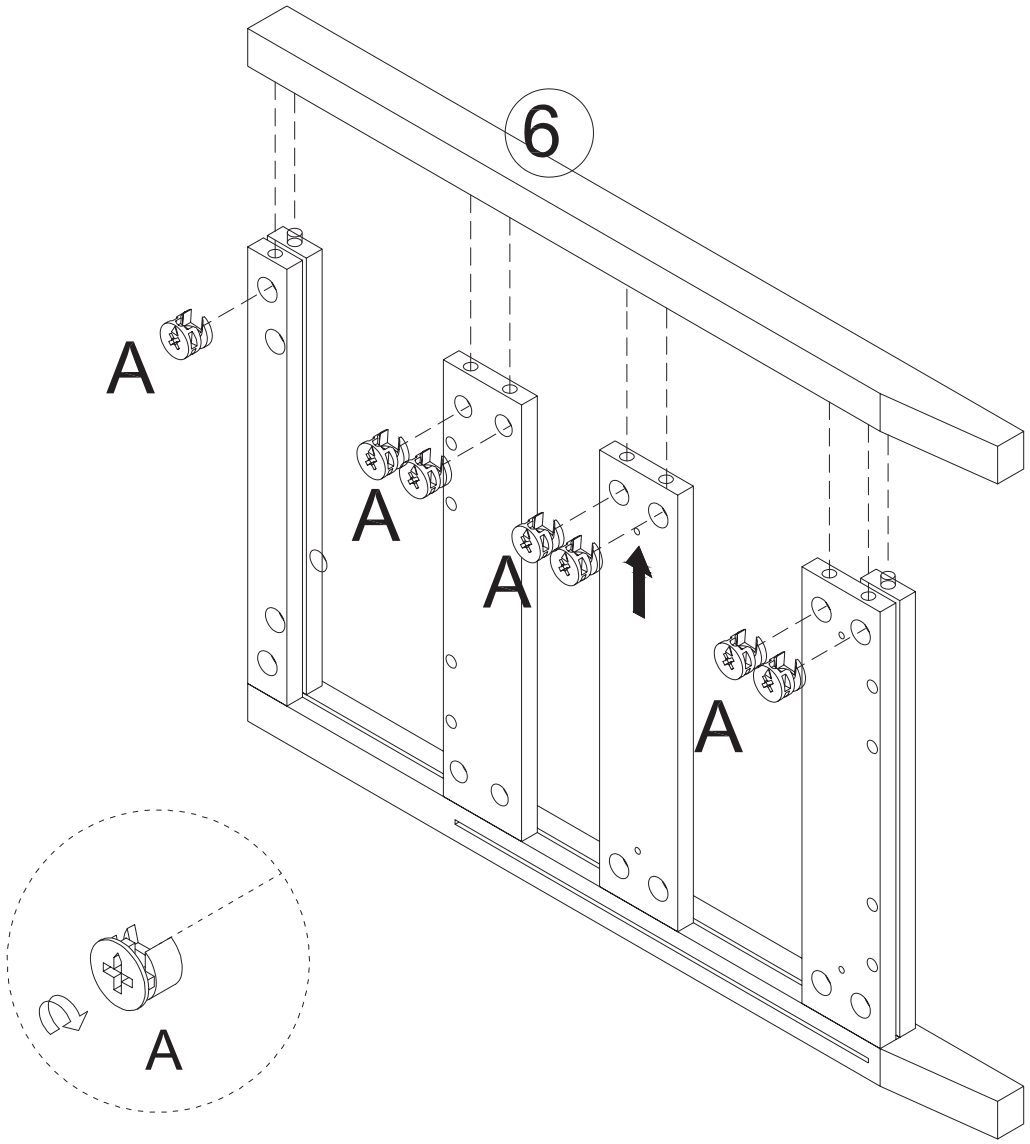

A  X7

Step 8

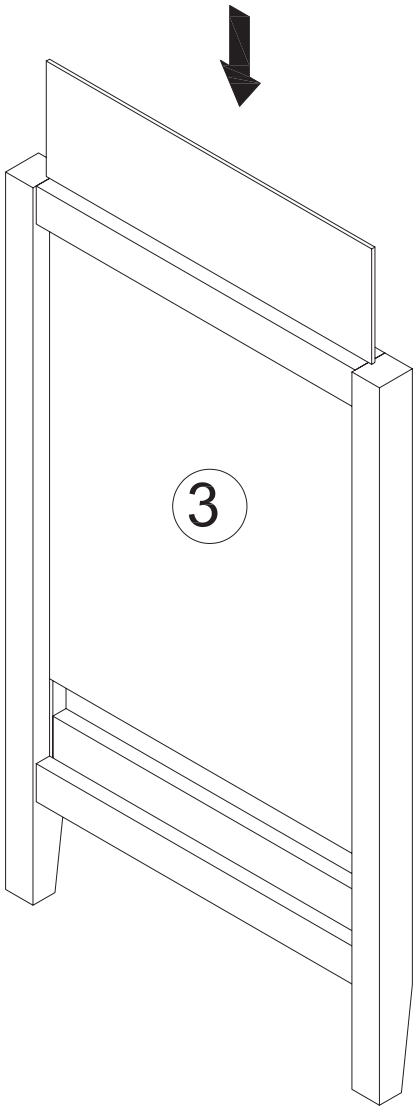

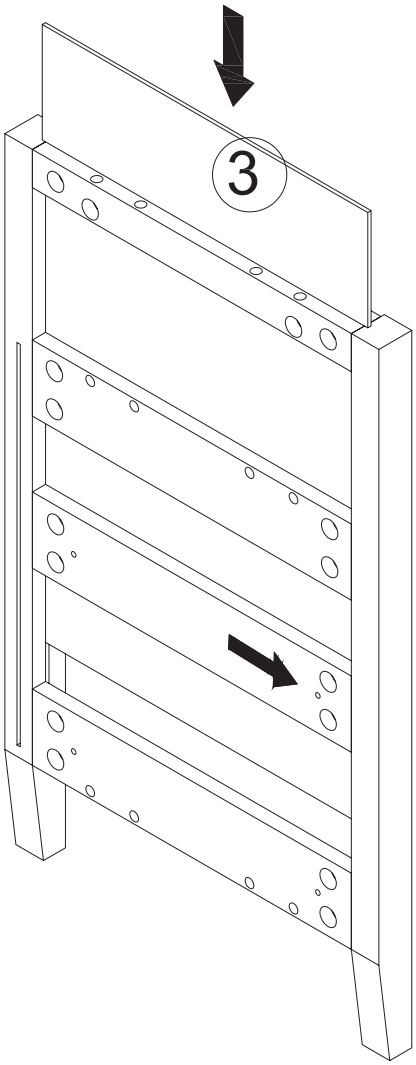

Step 9

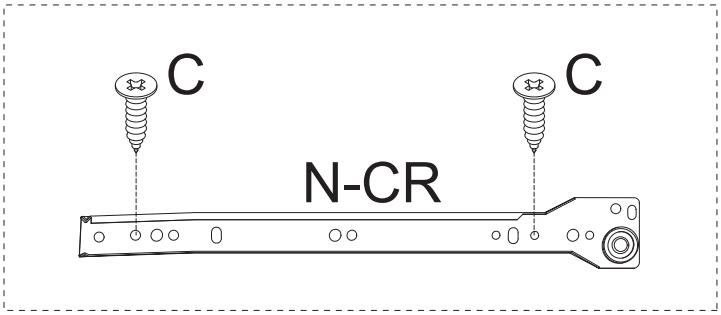

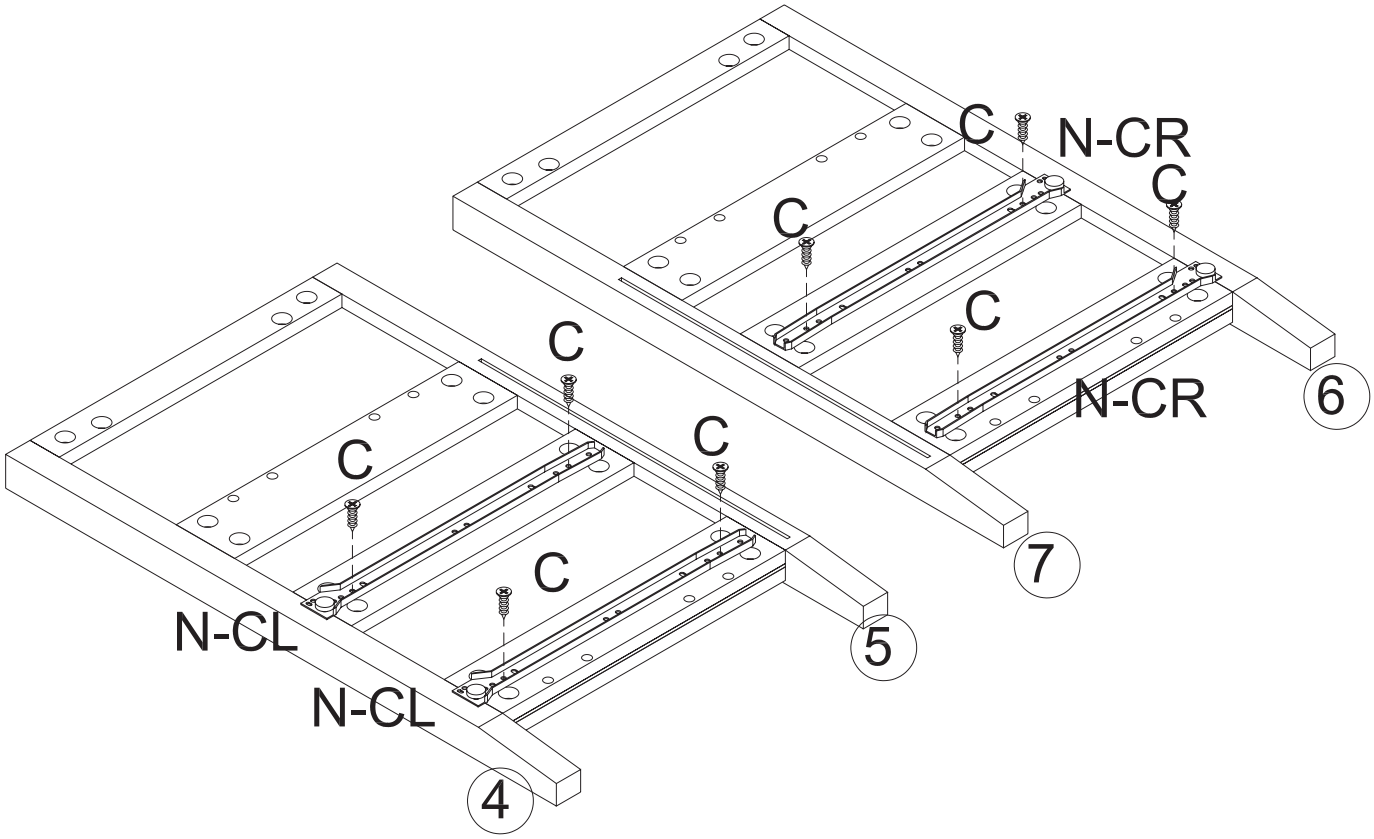

C X8

X2 N-CL

X2 N-CR

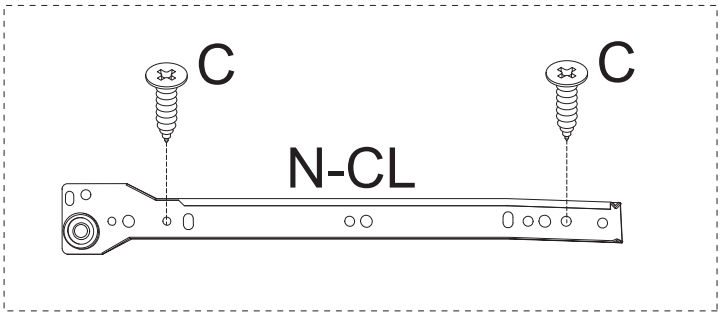

Step 10

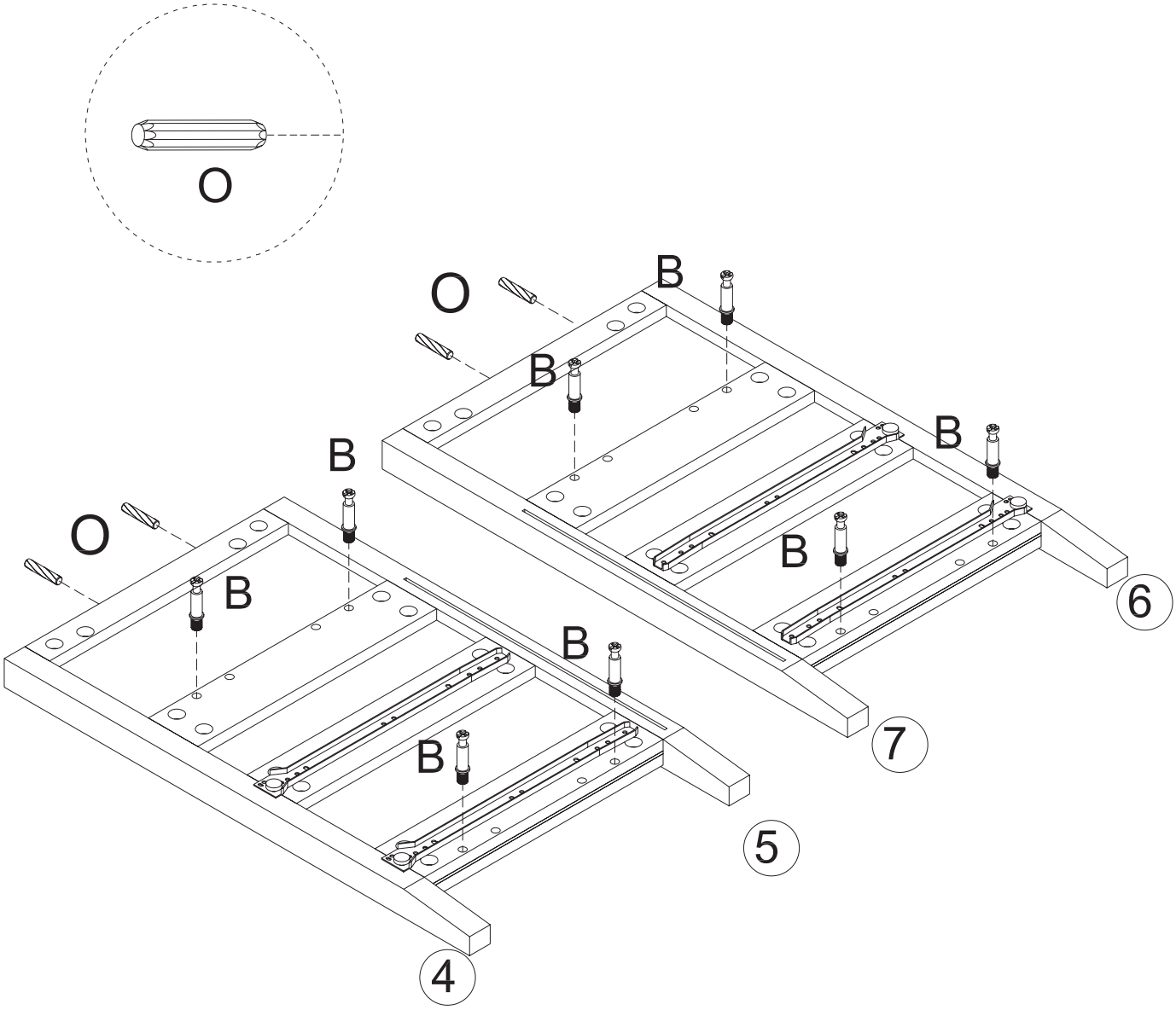

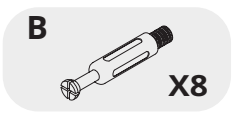

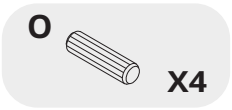

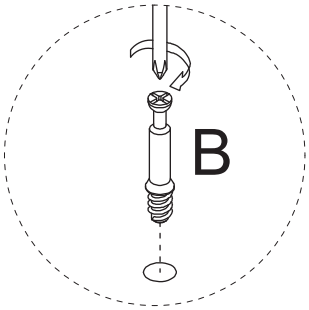

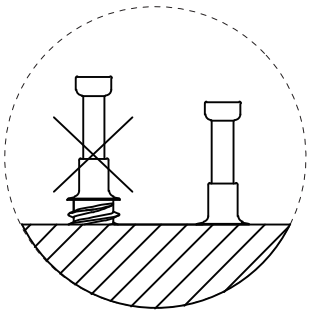

Step 11

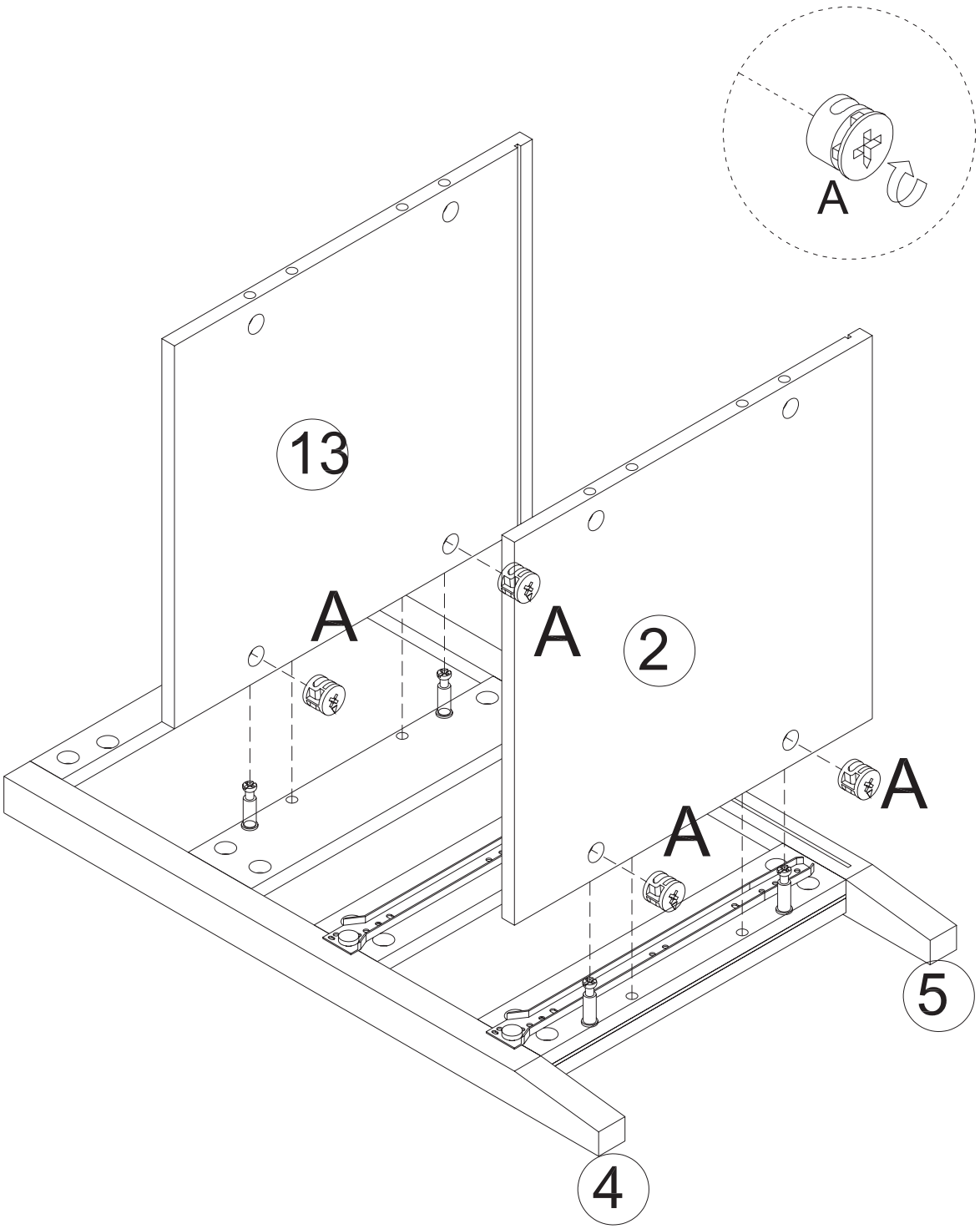



Step 12

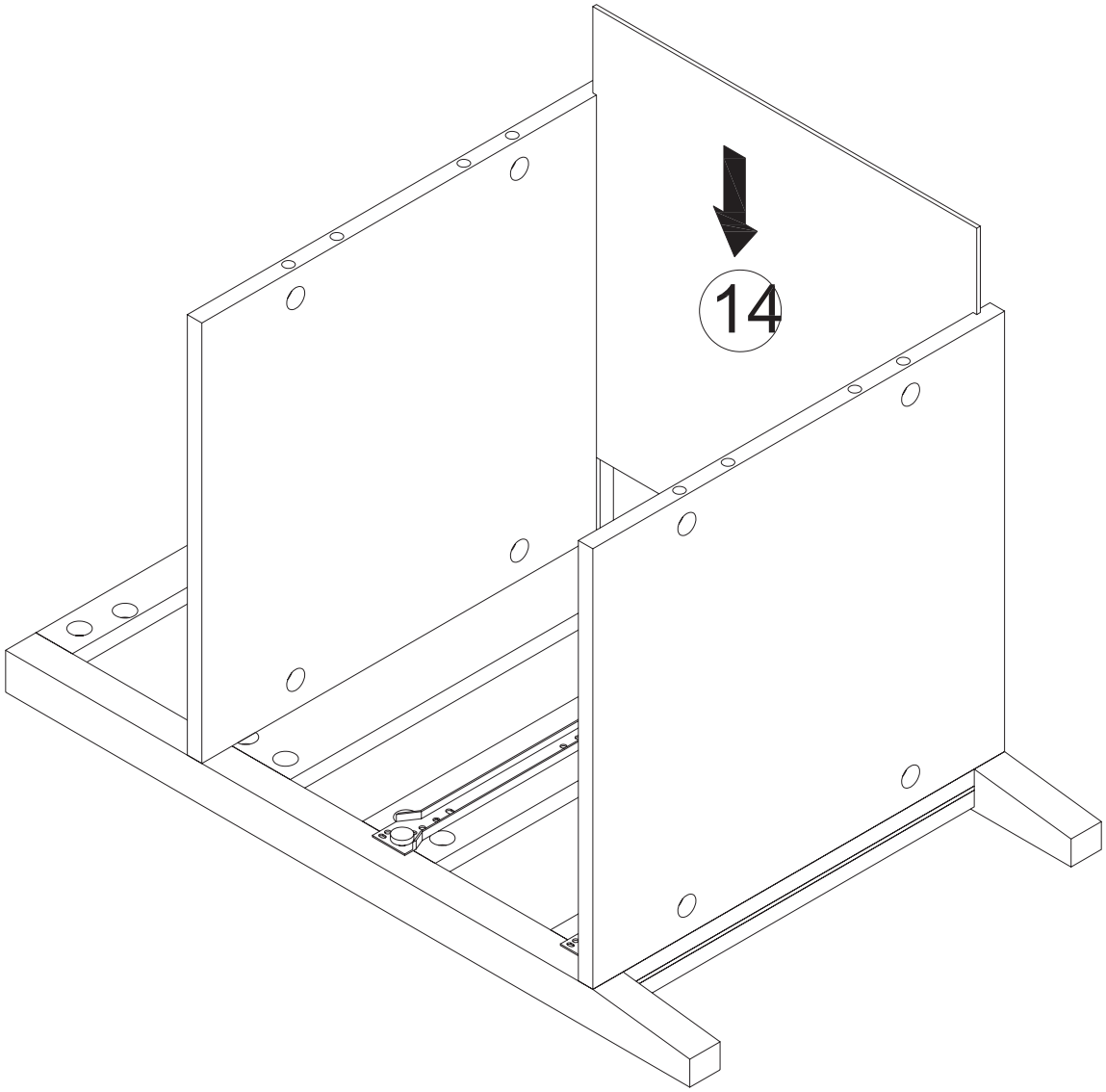

Step 13

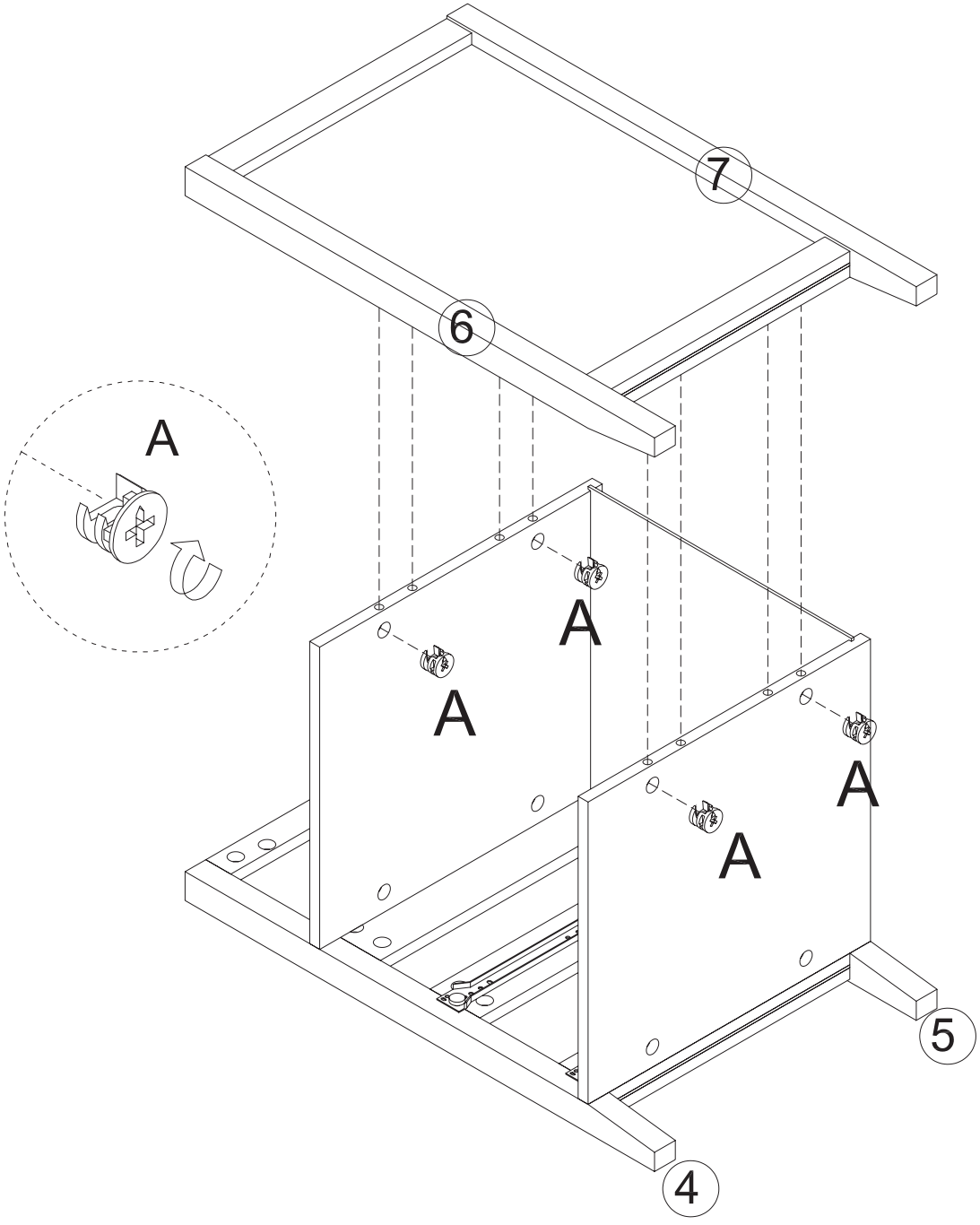

A  **X4**

Step 14

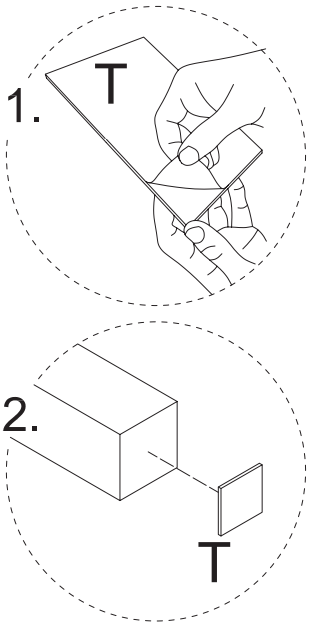

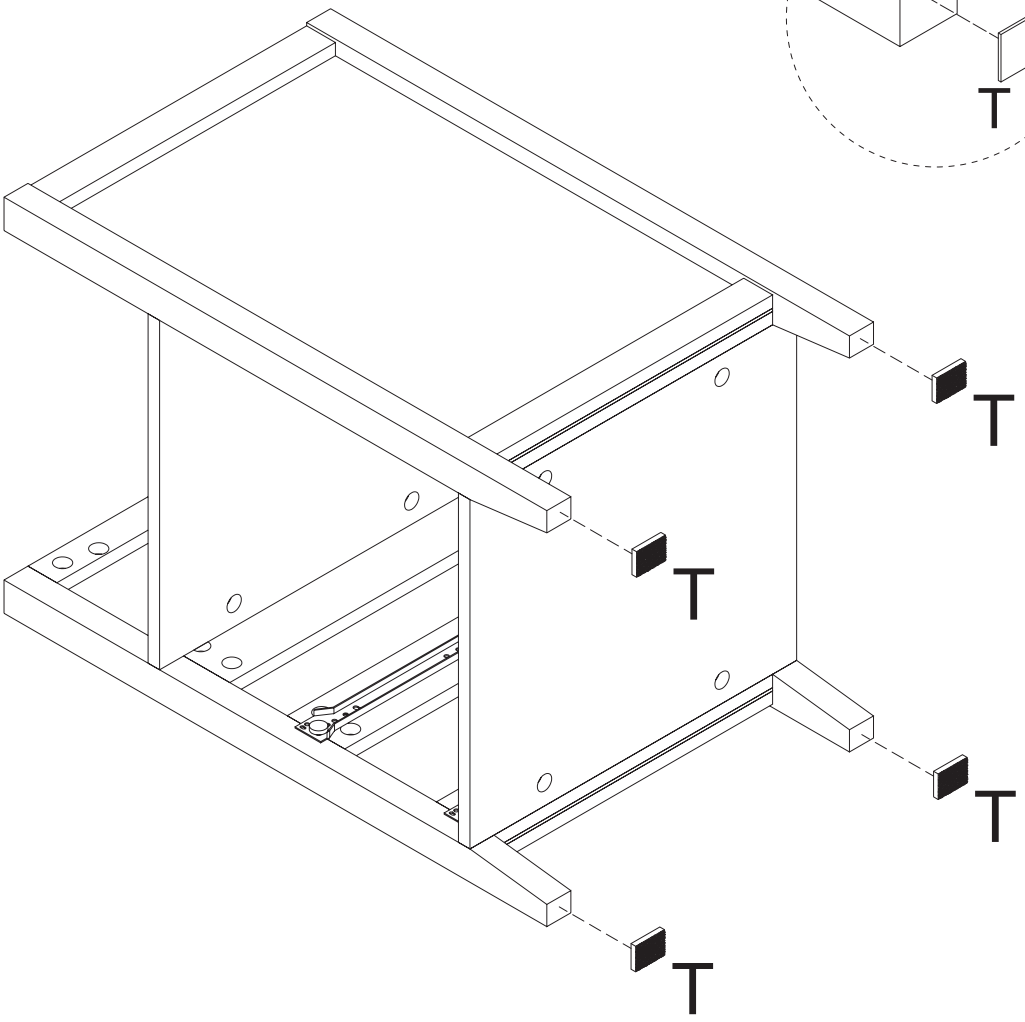

T X4

Step 15

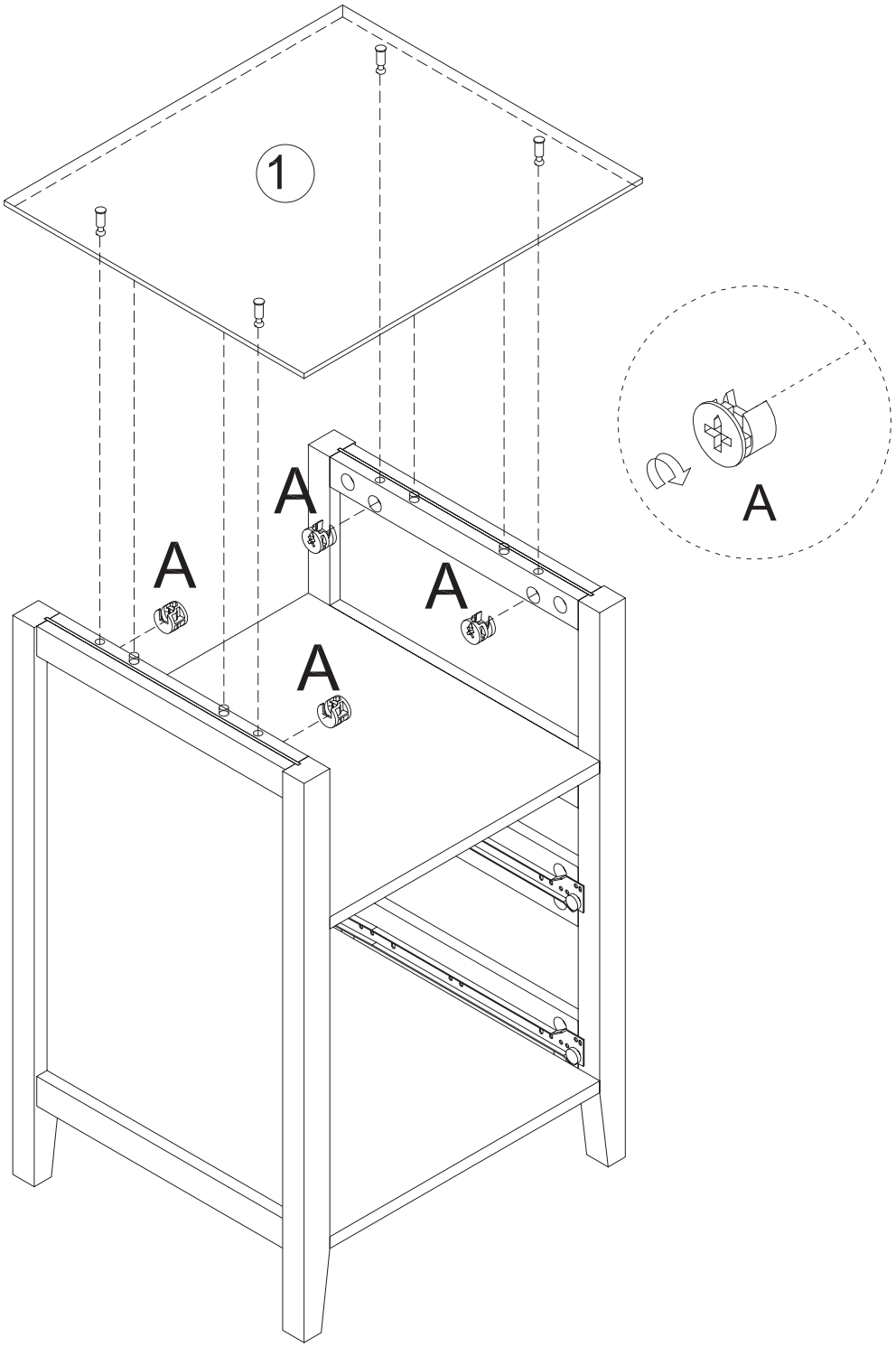

A  X4

Step 16

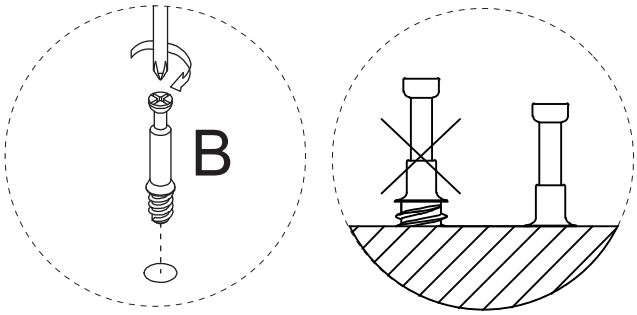

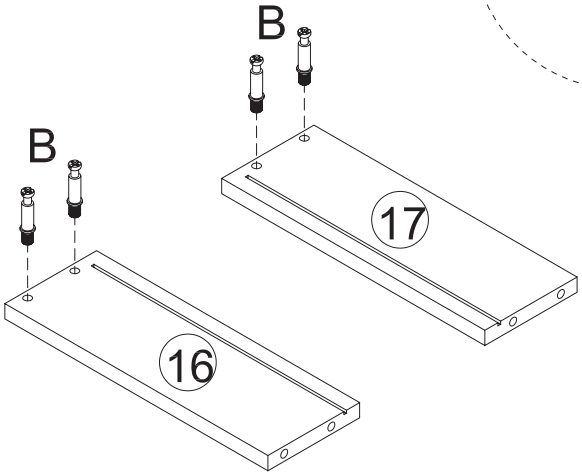

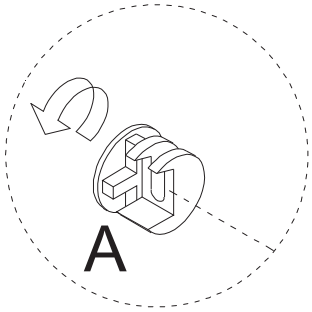

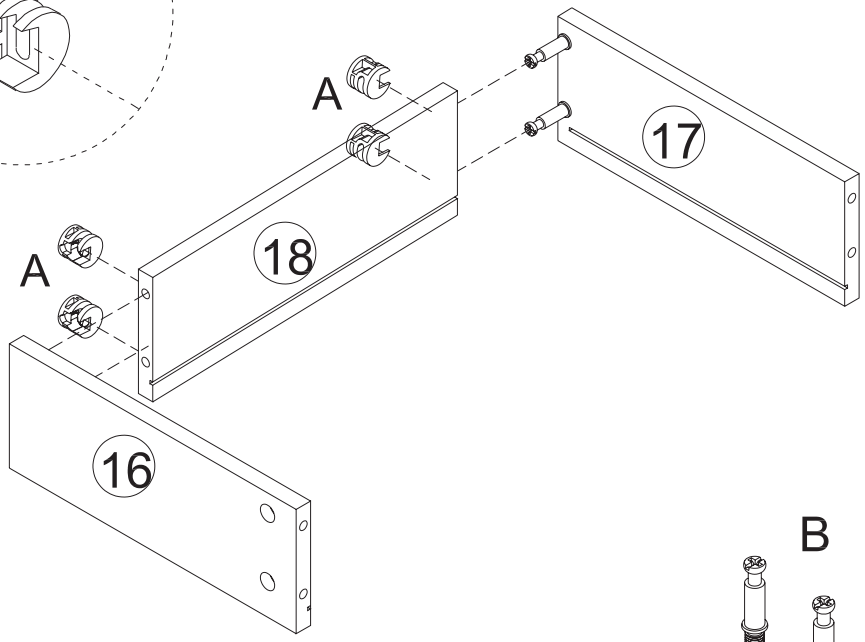

x2

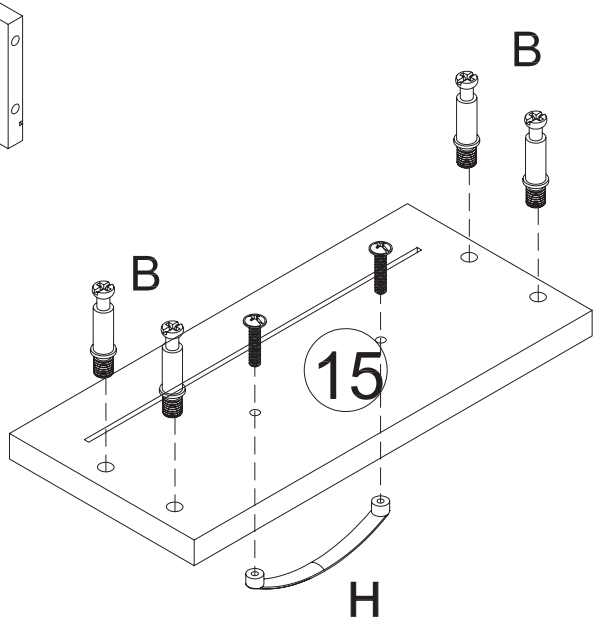

A X8

B X16

H X2

Step 17

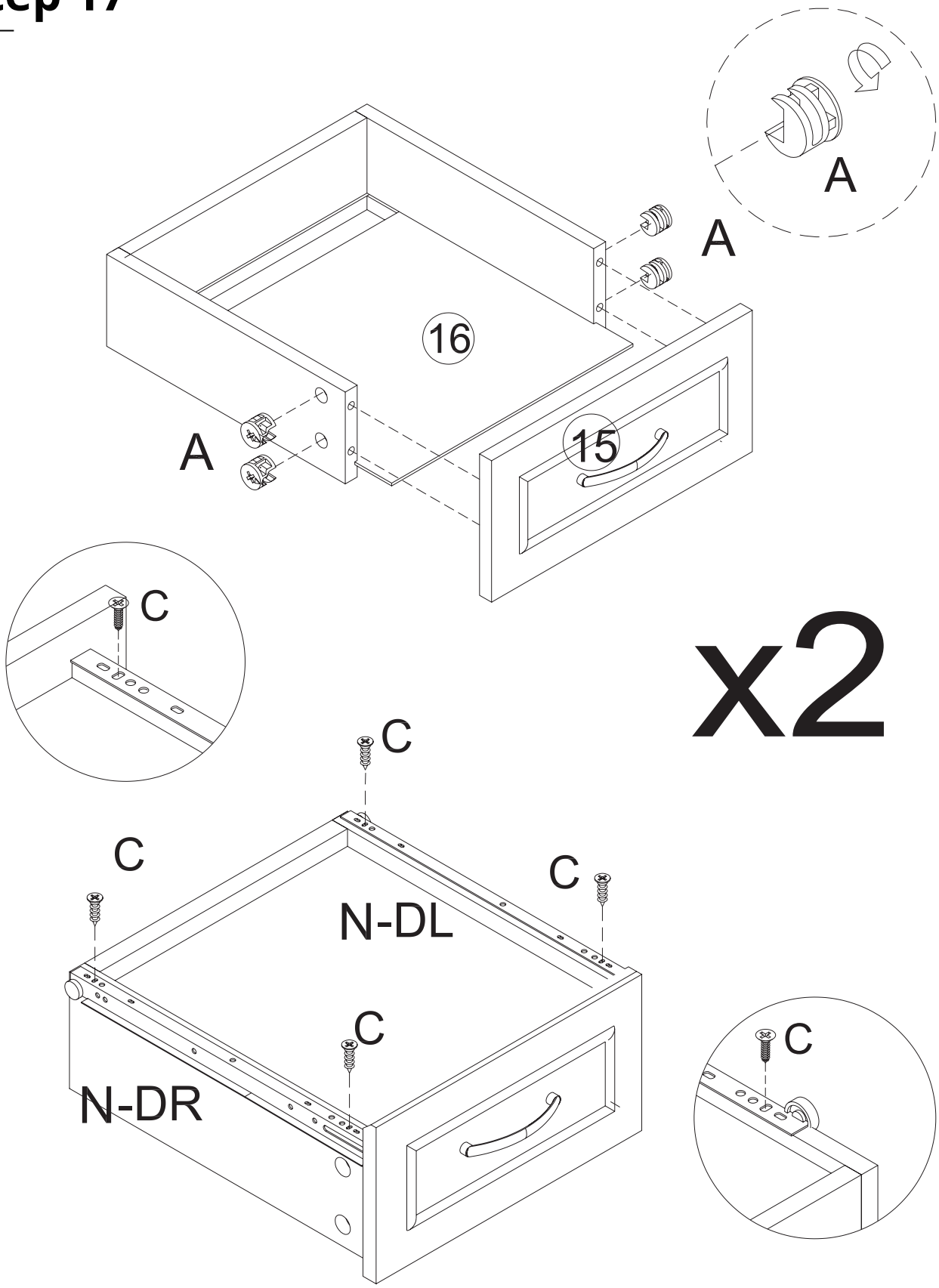

A X8

N-DL X2

N-DR X2

C X8

Step 18

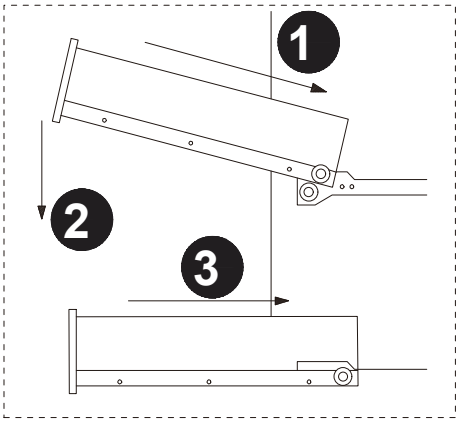

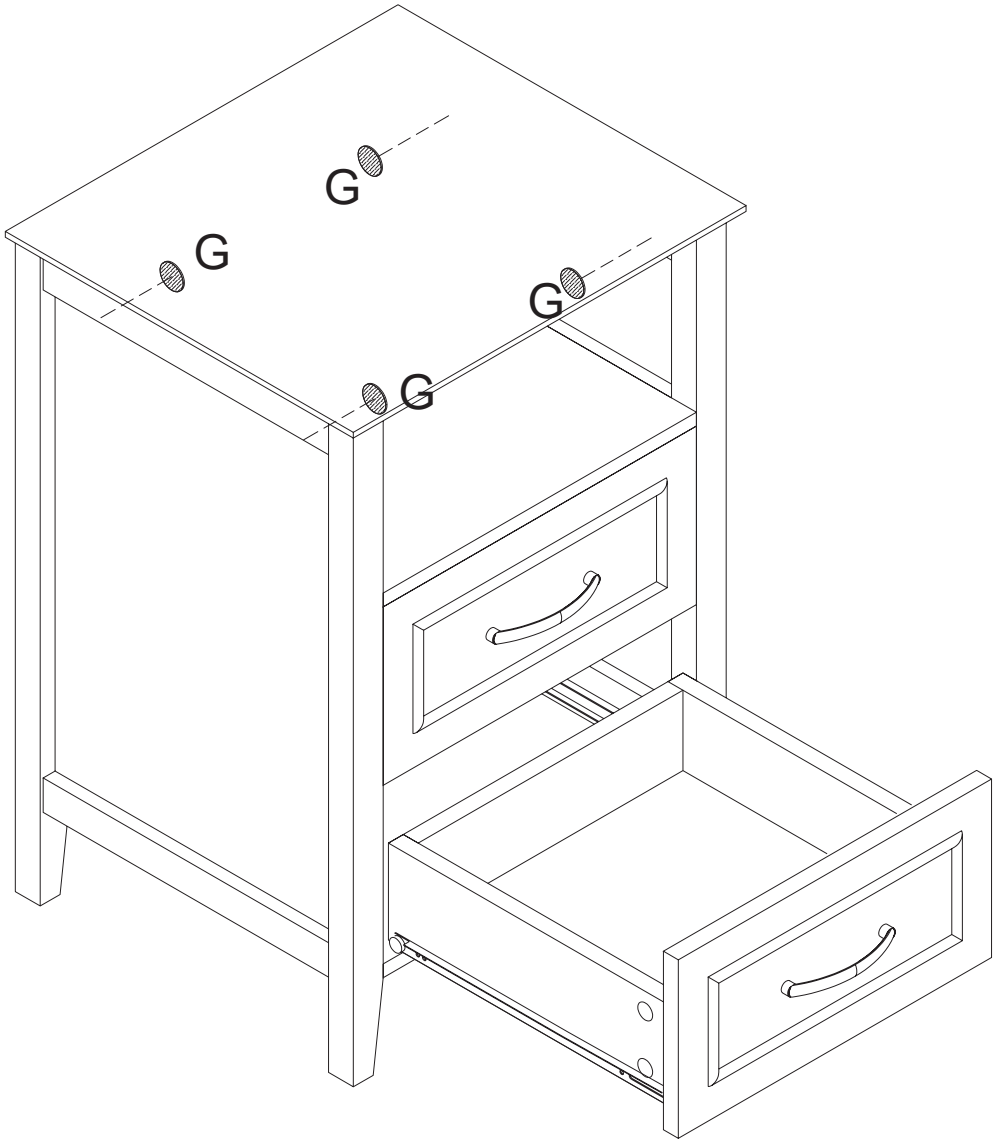

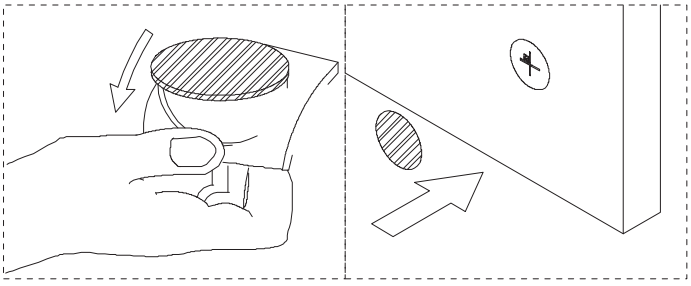

G X4

Step 19

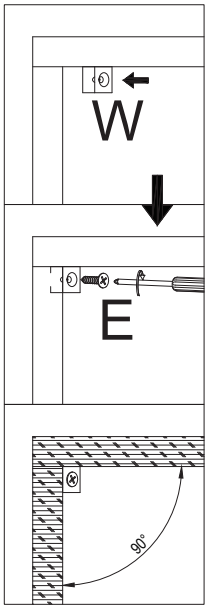

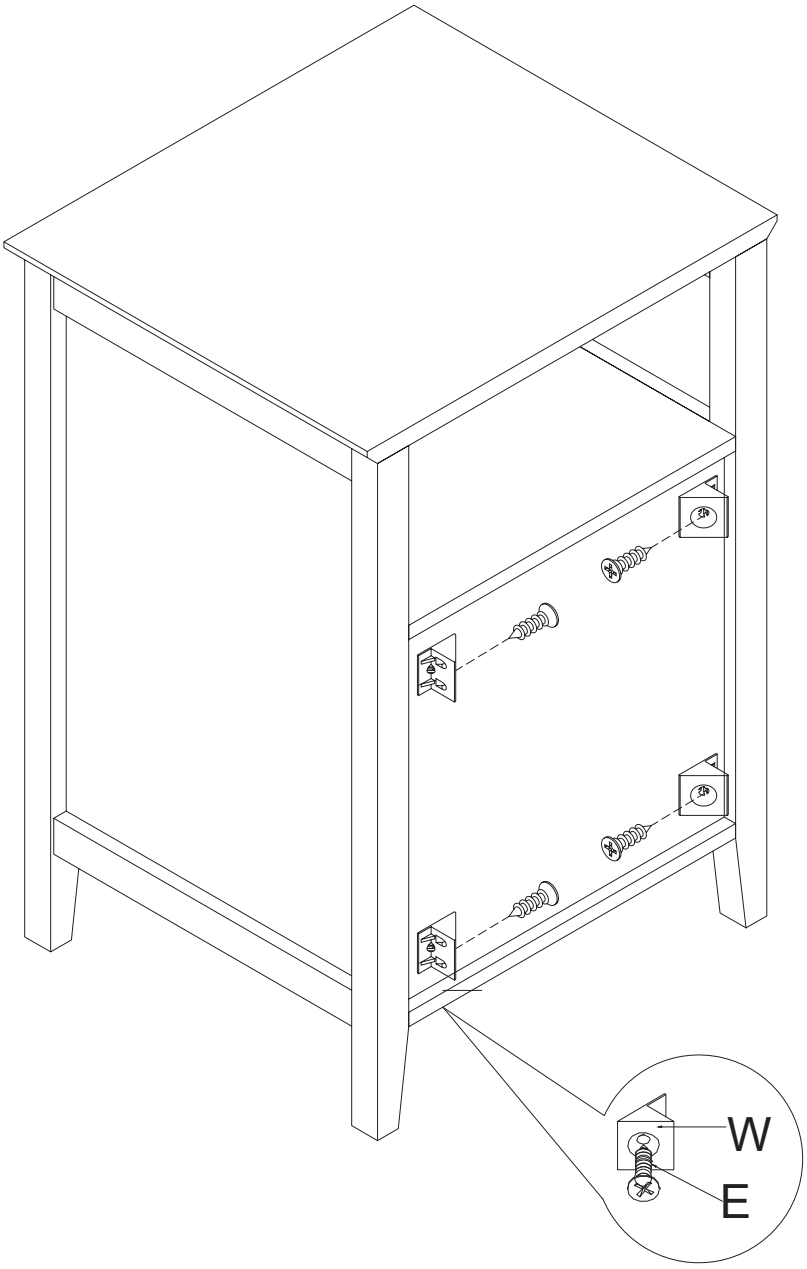

W X4

E X4

Step 20

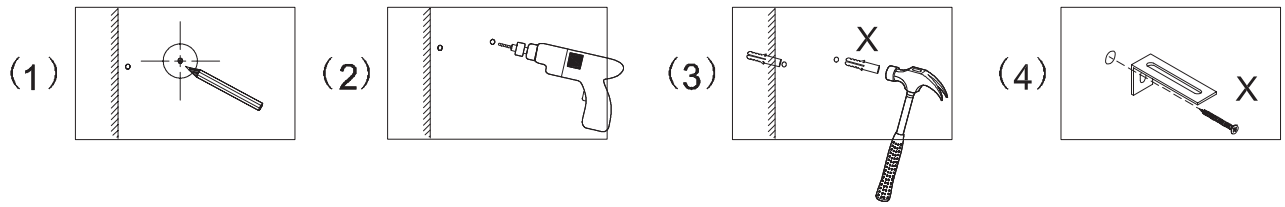

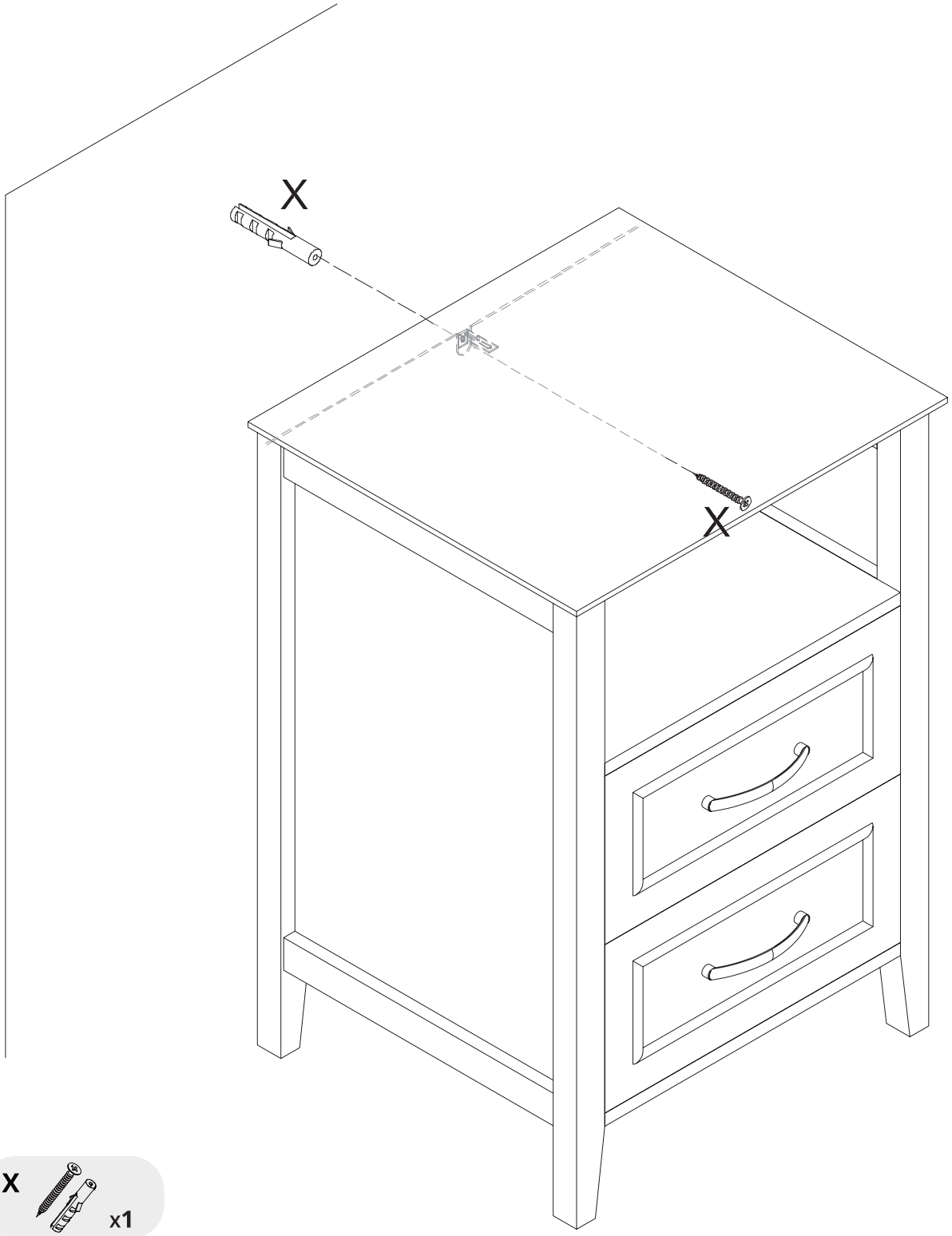

CARE INSTRUCTIONS

If treated with respect and love, your furniture will last you a long time. Each piece requires light maintenance to maximize its longevity.

Here are a few quick tips before using this product:

- The recommended weight limit for the table top is 100 lbs and 26 lbs for each storage compartment.
- Avoid uneven weight distribution for a long time as it may cause damage to the product's shape.
- The swing door may not swing smoothly when the table is overloaded by weight.
- Check and tighten the camlock and screw periodically, as it may lose over time.

How to take care of it?

- Avoid direct sunlight or use curtains or blinds to limit sun exposure to the product.
- Clean the product regularly with a dry, soft cloth.
- Avoid using the abrasive or liquid cleanser.
- Spillage may damage the surface. Clean immediately with a dry cloth.
- We recommend using placemats or coasters underneath glasses, cups, bowls, or plates to prevent scratches to the table surface.

Follow the care instructions and look after your furniture, in return, your furniture will look after you.