10 : 00

estimated assembly

2 or more

people required

Ok, let’s get started!

- Put on mood music!
- To prevent damage to product, use the clean side of package carton or rug as working surface.
- In the event of missing or damaged parts, delivery problems etc., please reach out to our team.
  We will be happy to fix the problem!

care guide

- Clean regularly with a soft and dry cloth.
- To protect finish, avoid use of abrasive cleaners.
- Wipe up spills immediately. Please!

product parts

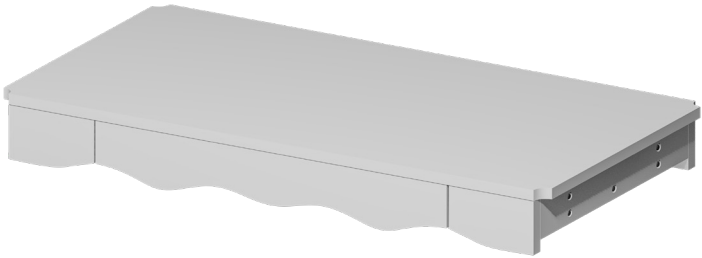

(A)
Table Top
x1

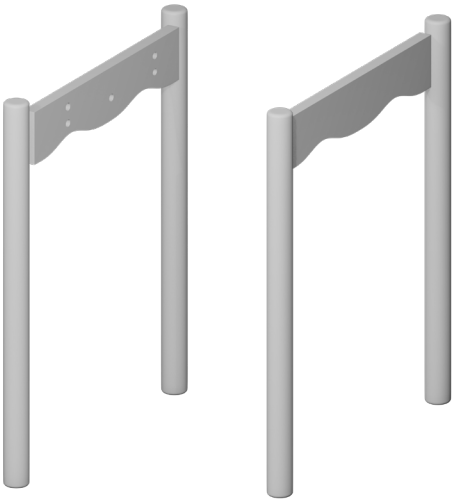

(B)
Table legs
x2

what's included

(C)- Bolt
(50 x 8mm)
x10

(D)- Plain Washer
x10

(E)- Lock Washer
x10

(F)- Allen Key
(5mm)
x1

YS	Yellow sticker
GS	Green sticker

assembly instructions

Friendly Tip: Take a deep breath going in. This may be a tricky part, but nothing too overwhelming. Just follow these steps to the T and the outcome will be worth it!

While assembling the product, tighten the bolts up to 50%. Once all parts are in place, only then fully tighten the bolts.

step 1:

Start by placing two books of the same height parallel to each other on a flat surface. Now, turn the tabletop (A) upside down and place over it.

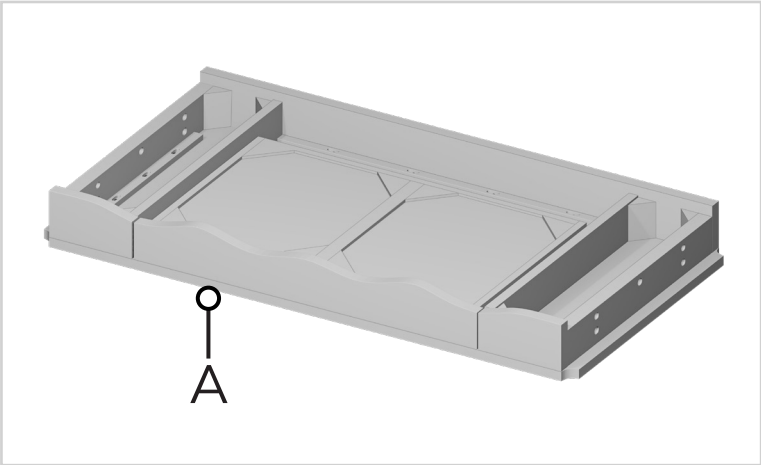

step 2:

Then, using the image below as a reference, align the leg (B) with the slots given on the tabletop. Ensure the stickers on the legs & table top are similar.

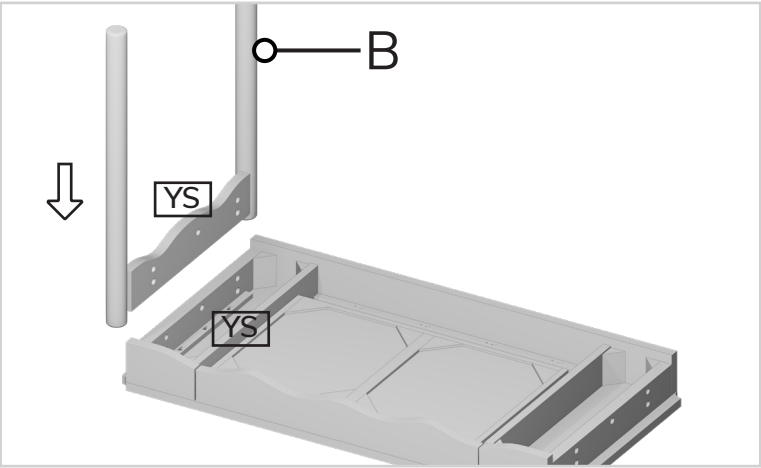

step 3:

Now, fix the leg to the table top by inserting plain washer (D), lock washer (E), and bolts (C) in the given slots. Tighten the bolt using allen key (F).

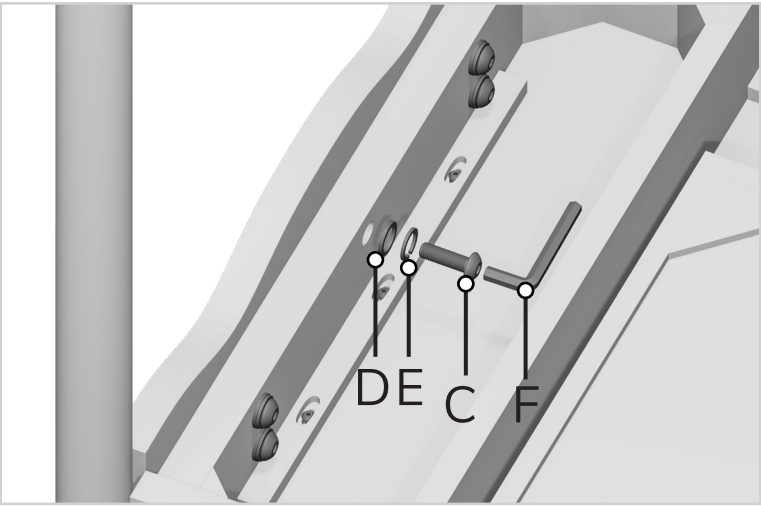

step 4:

Repeat the same process with the remaining leg (B). Make sure that sticker matches with their counterparts.

step 5:

If required, adjust the levellers according to the floor as shown in the image.

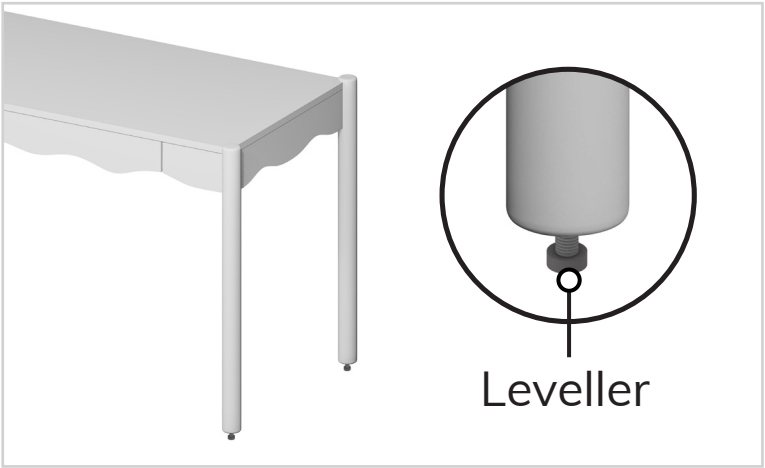

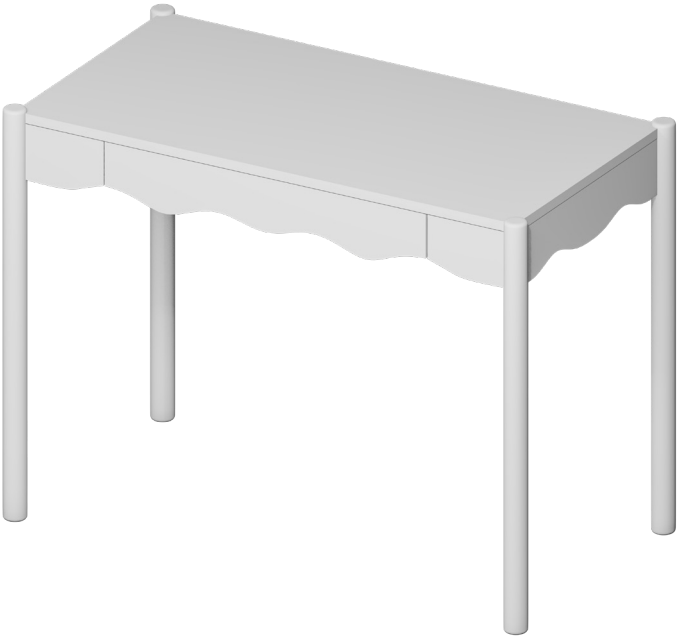

Voila! Your desk is now assembled and secure!