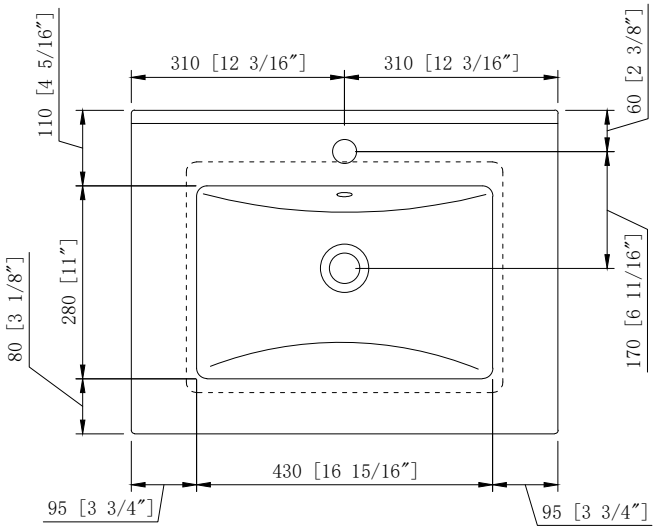
310 [12 3/16″]
310 [12 3/16″]
110 [4 5/16″]
60 [2 3/8″]
280 [11″]
80 [3 1/8″]
170 [6 11/16″]
430 [16 15/16″]
95 [3 3/4″]
95 [3 3/4″]

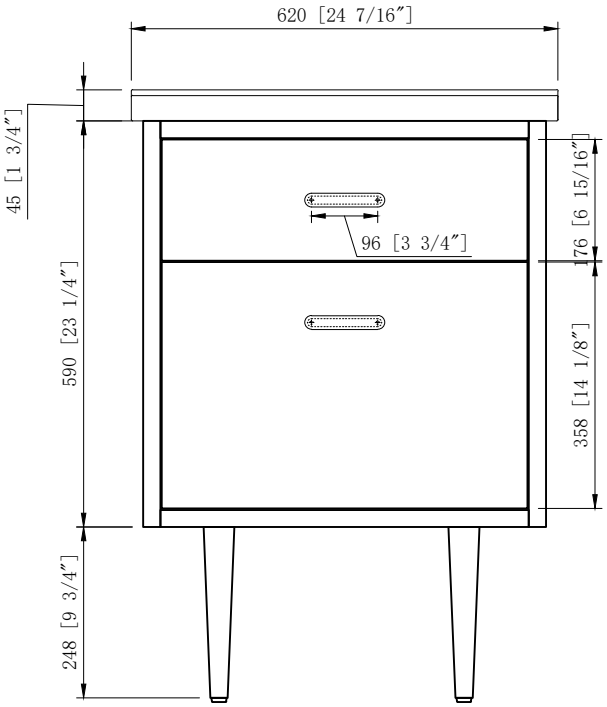
620 [24 7/16″]
45 [1 3/4″]
96 [3 3/4″]
176 [6 15/16″]
590 [23 1/4″]
358 [14 1/8″]
248 [9 3/4″]

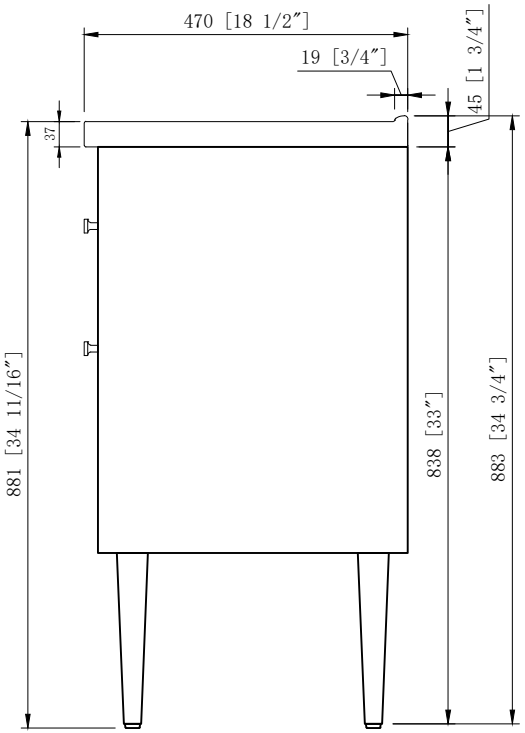
470 [18 1/2″]
19 [3/4″]
45 [1 3/4″]
37
881 [34 11/16″]
838 [33″]
883 [34 3/4″]

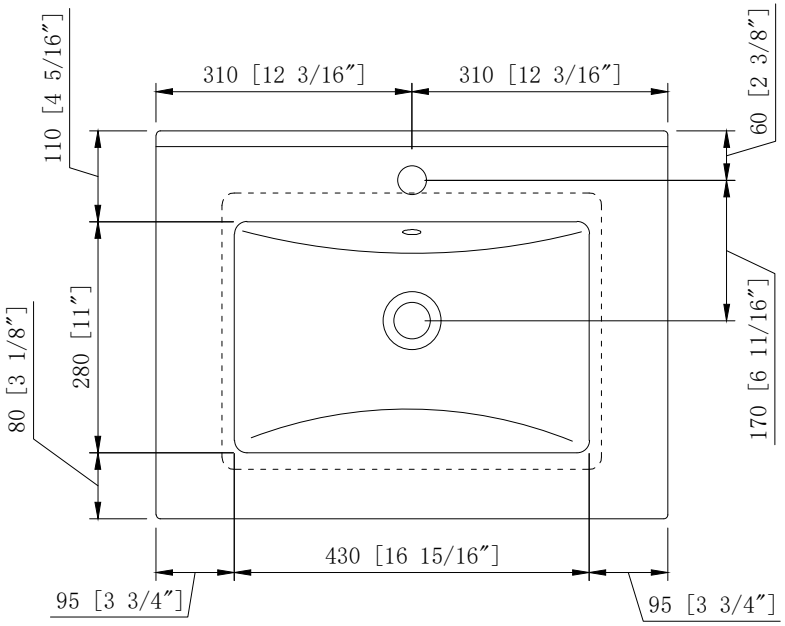
310 [12 3/16″]
310 [12 3/16″]
110 [4 5/16″]
60 [2 3/8″]
280 [11″]
80 [3 1/8″]
170 [6 11/16″]
430 [16 15/16″]
95 [3 3/4″]
95 [3 3/4″]

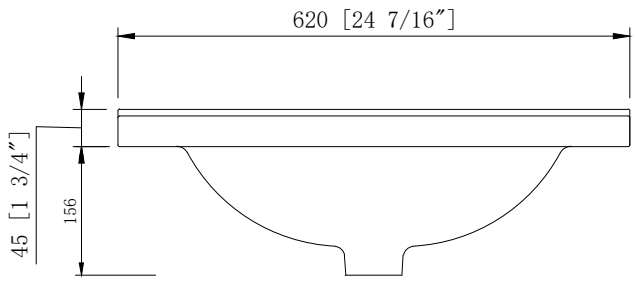
620 [24 7/16″]
45 [1 3/4″]
156

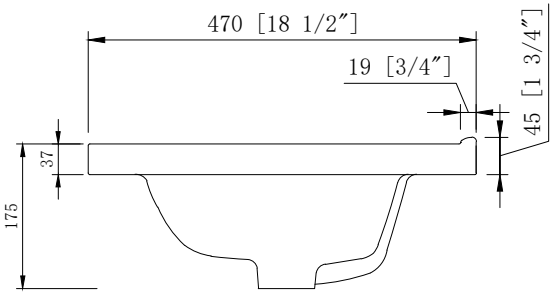
470 [18 1/2″]
19 [3/4″]
45 [1 3/4″]
37
175

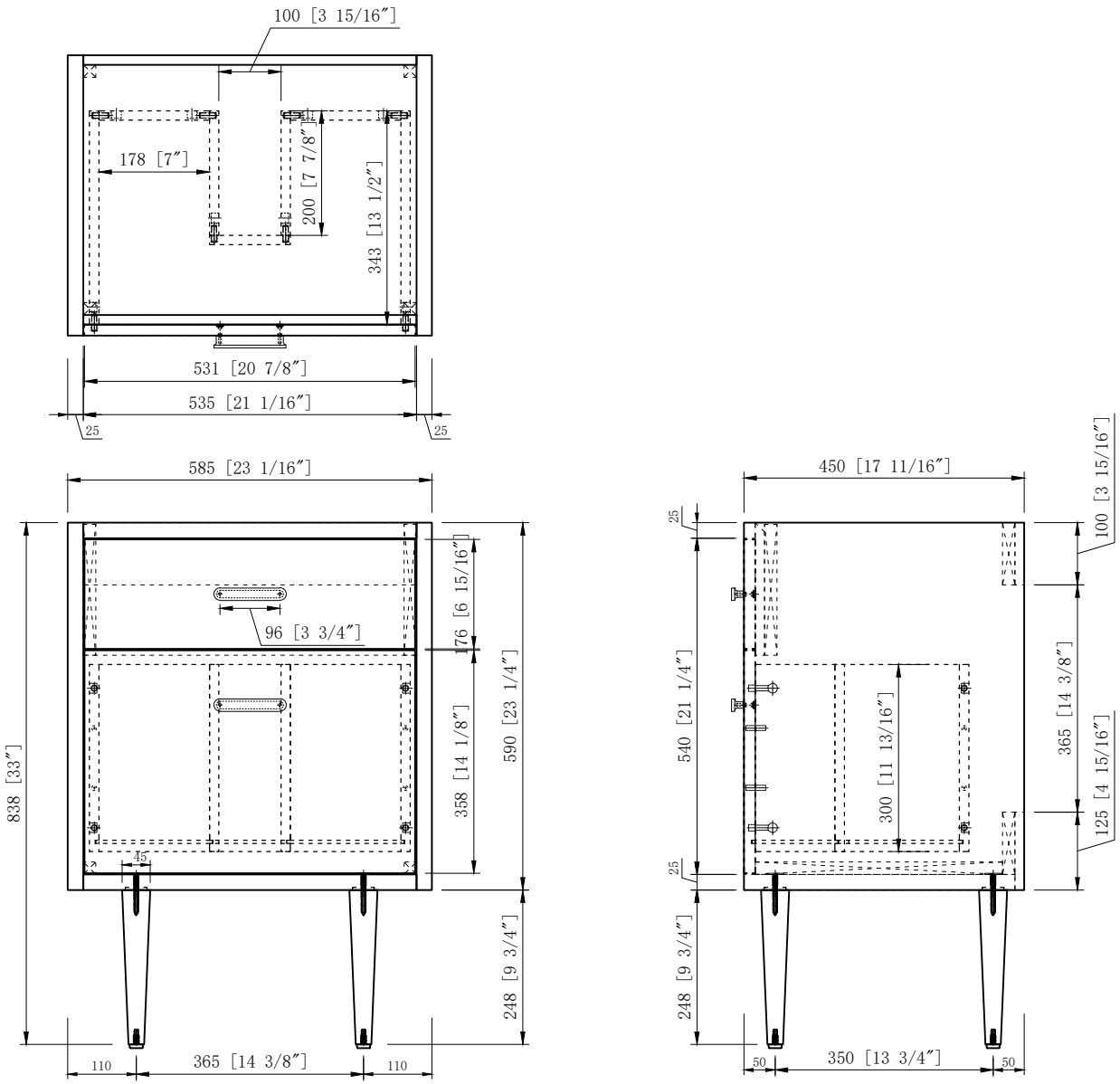
100 [3 15/16″]
178 [7″]
200 [7 7/8″]
343 [13 1/2″]
531 [20 7/8″]
535 [21 1/16″]
25
25
585 [23 1/16″]
96 [3 3/4″]
176 [6 15/16″]
358 [14 1/8″]
590 [23 1/4″]
838 [33″]
45
248 [9 3/4″]
110
365 [14 3/8″]
110
450 [17 11/16″]
25
100 [3 15/16″]
540 [21 1/4″]
300 [11 13/16″]
365 [14 3/8″]
125 [4 15/16″]
25
248 [9 3/4″]
50
350 [13 3/4″]
50