Side Cabinet
9988356COM

Ameriwood HOME

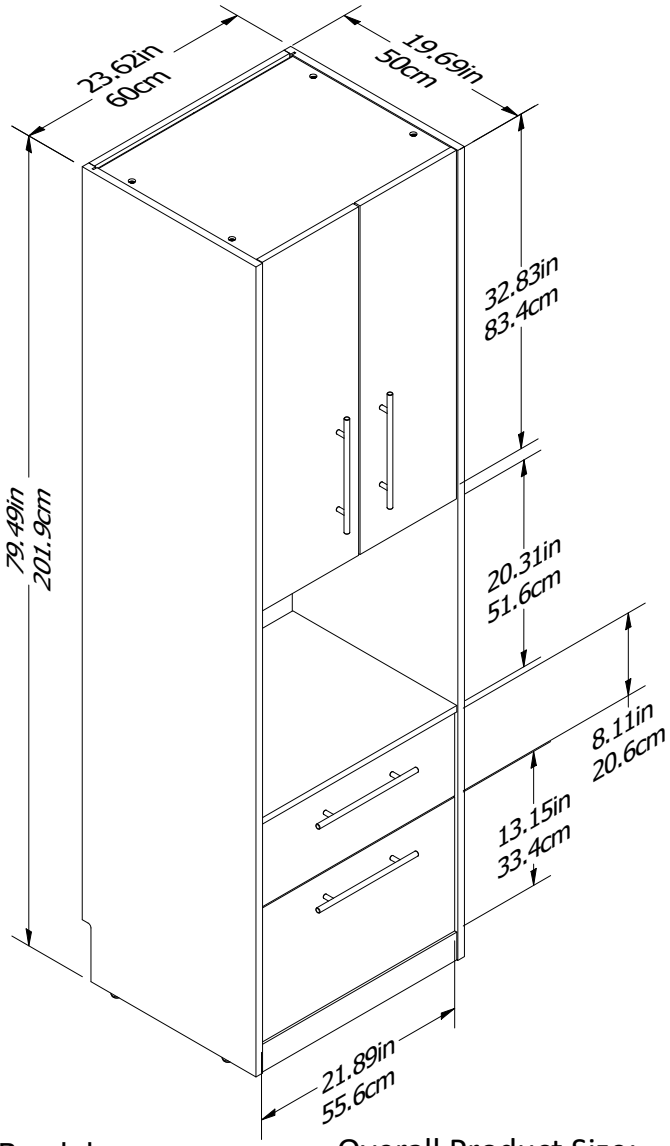

Wood Breakdown:
PB 90% & MDF 5%
Total storage: 16.5 cubic feet

Overall Product Size:
79.49 in H x 23.62 in W x 19.69 in D
201.9 cm H x 60.0 cm W x 50.0 cm D

Load Limits:
Top Shelf - 10 lbs
Adj Shelf - 30 lbs
Upper Shelf - 40 lbs
Lower Shelf - 40 lbs
Drawer - 25 lbs ea

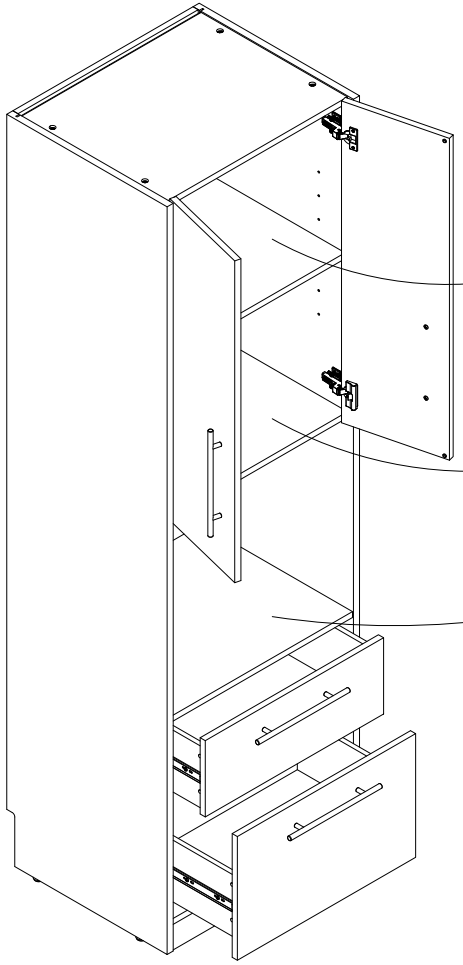

Adj Shelf
22.01" W x 17.72" D
7 Positions 2.52" apart

Upper Shelf
22.13" W x 17.97" D

Lower Shelf
22.13" W x 18.58" D

Interior Drawer dimensions:
20.3 in. (51.6 cm) W
5.7 in. (14.5 cm) H
12.6 in. (32 cm) D
0.85 cubic feet each storage each

Maximum Weight Capacities
Unit Weight: 143.2 lbs. (65.1 kg)