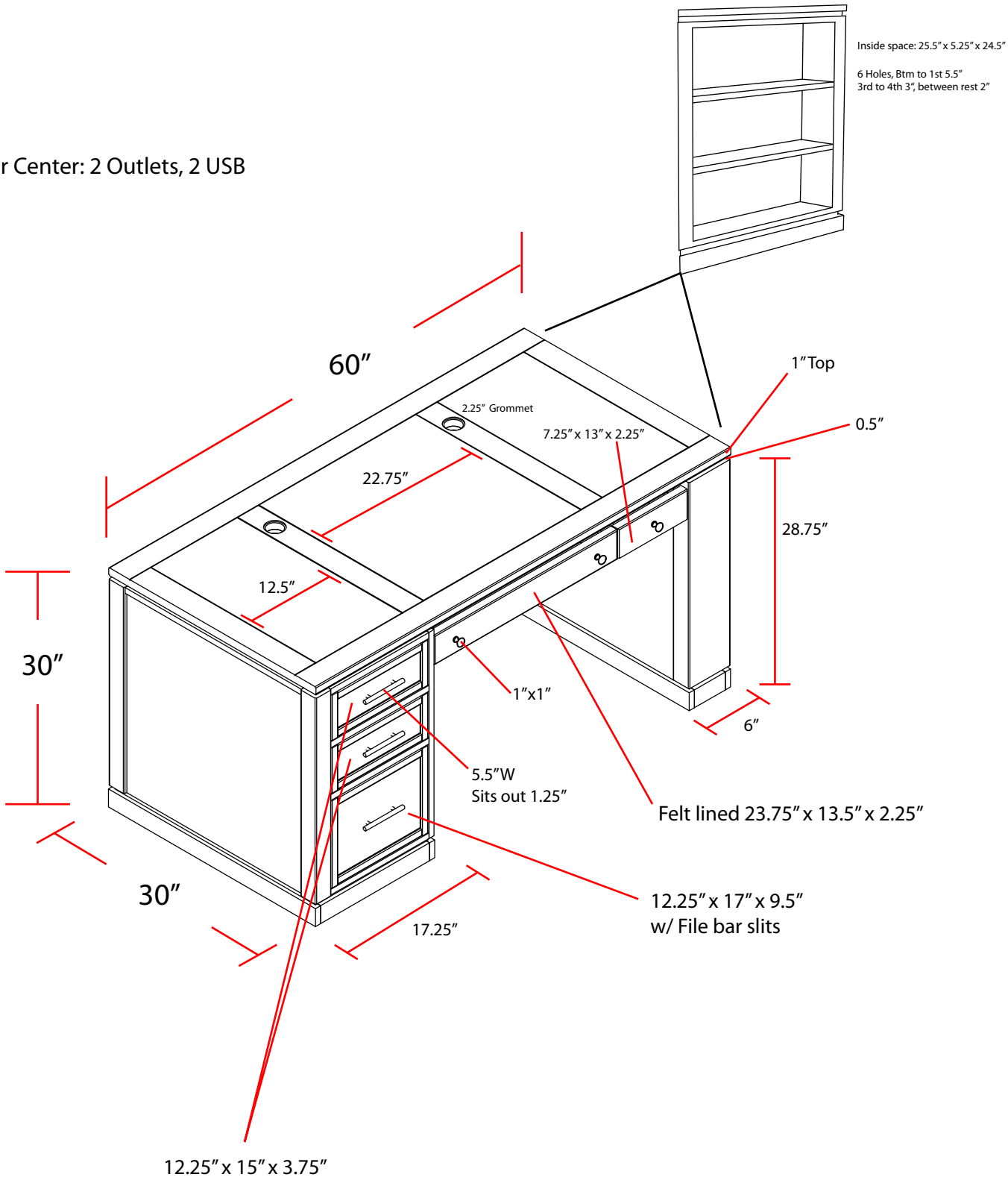Power Center: 2 Outlets, 2 USB