ancona

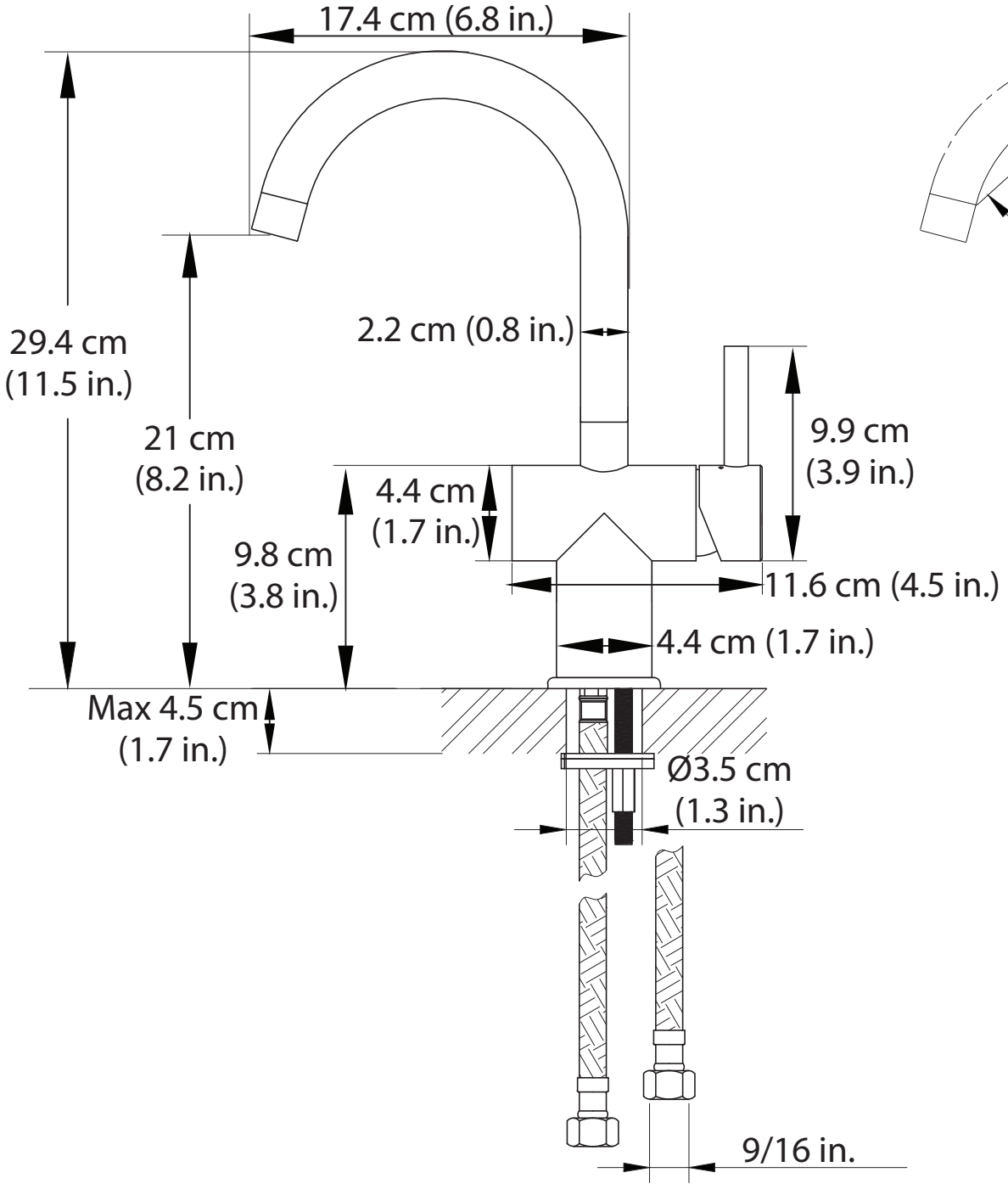
17.4 cm (6.8 in.)
29.4 cm
(11.5 in.)
21 cm
(8.2 in.)
2.2 cm (0.8 in.)
9.9 cm
(3.9 in.)
4.4 cm
(1.7 in.)
9.8 cm
(3.8 in.)
11.6 cm (4.5 in.)
4.4 cm (1.7 in.)
Max 4.5 cm
(1.7 in.)
Ø3.5 cm
(1.3 in.)
9/16 in.

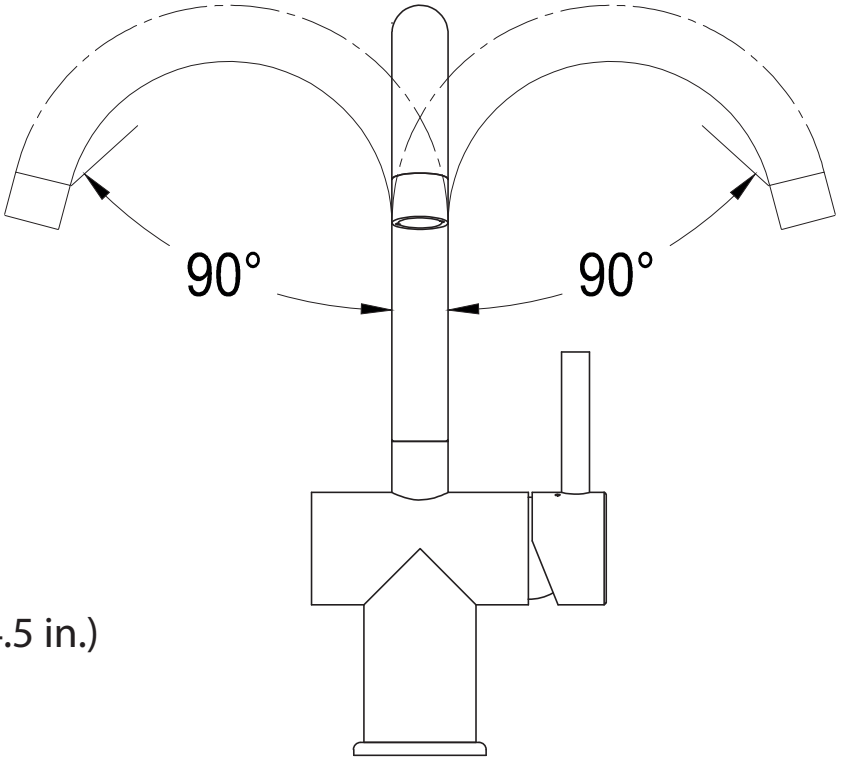
90°
90°