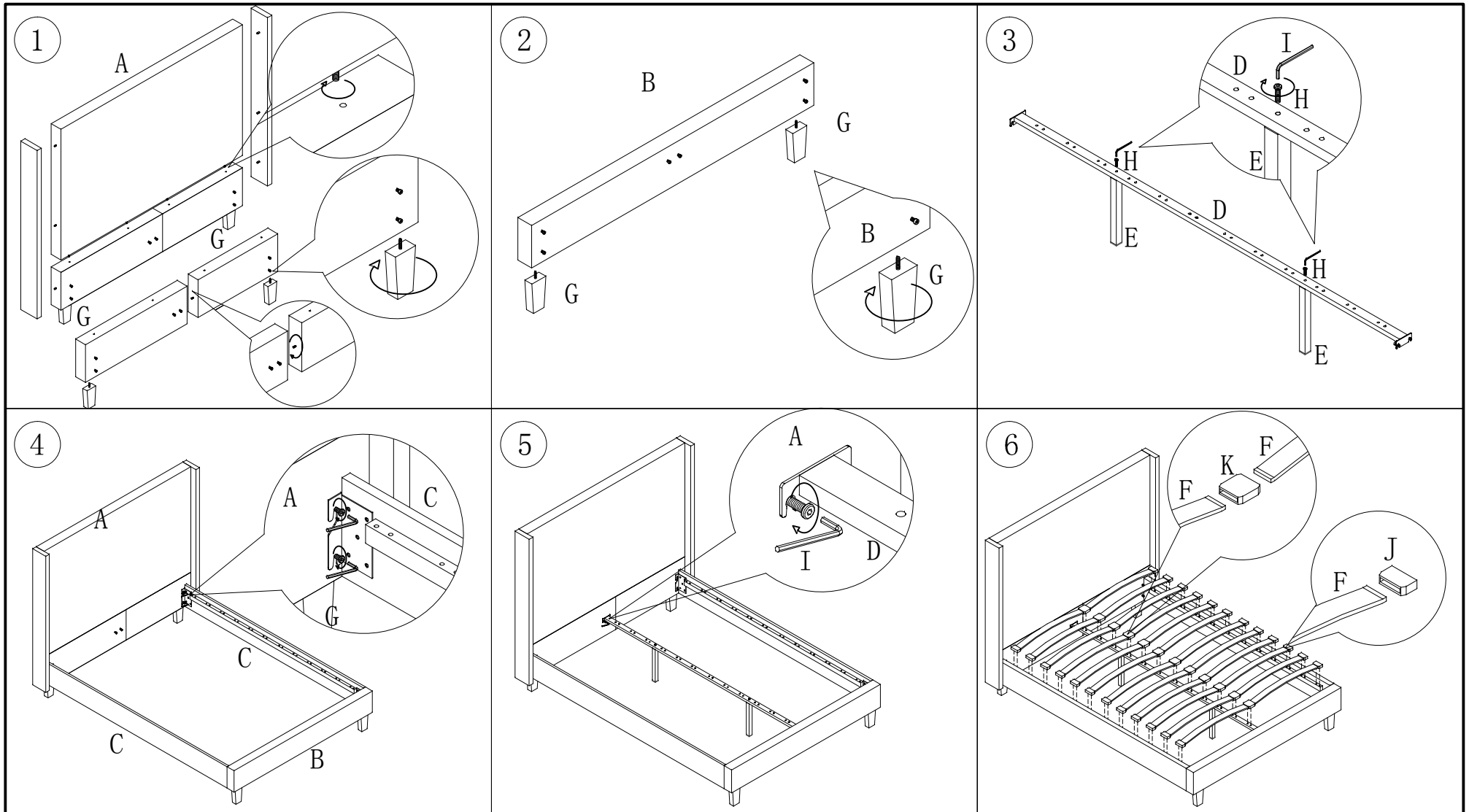

A Headboard	B Footboard	C Siderails	D Middle cross beam	E Middle leg	F Slat	G Bed leg	H Innerscrew ø8*40	I Inner allen wrench	J Edge slab	K Middle slab				
1pcs	1pcs	2pcs	1pcs	2pcs	28pcs	4pcs	13pcs	1pcs	28pcs	14pcs				Assembly instruction