ASSEMBLY INSTRUCTION FOR

LODEN DOUBLE WASHSTAND

Hardware List				
A		Allen Bolt	Ø6x10mm	08
B		Washer	M6 x 16	08
C		Allen Key	M4	01
D		Metal Tab	54x20mm	08
E		Allen Bolt	Ø8x20mm	06
F		Washer	M8 x 20	06
G		Allen Key	M5	01

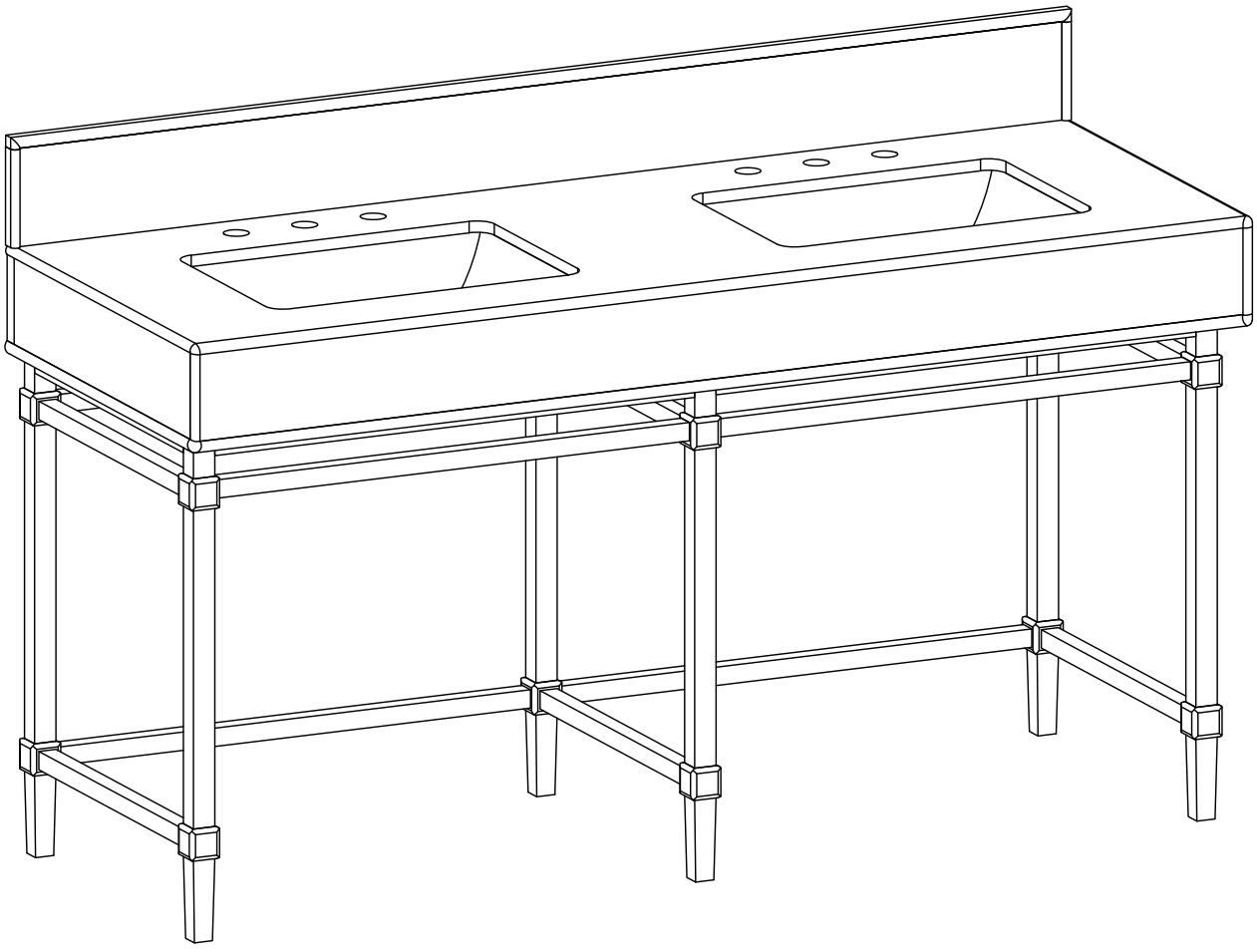

CAUTION : Please do not over tighten bolt / Screws

Made in India

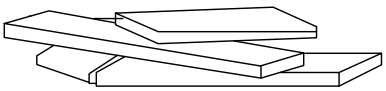

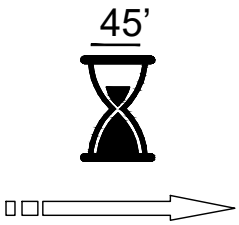

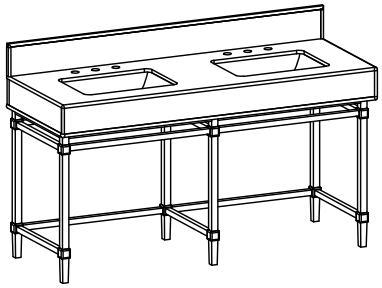

PROFESSIONAL INSTALLATION REQUIRED - CONTRACTOR AND PLUMBER needed for Installation.

- Please read all instructions carefully before assembling.
- For your safety, assembly by two or more adults is strongly recommended.
- Keep instructions for future use.
- Use only vendor supplied hardware to assemble. Using unauthorized hardware could jeopardize the structural integrity of the item.
- The Vanity Base must be secured to the wall. Wall attachment hardware is not included. For safe mounting it is essential to use the proper hardware for your wall type. If walls are drywall or wood stud, concrete, brick or plaster, please consult your local hardware store for assistance in selecting the appropriate hardware.

- Note: Consoles usually need to be leveled and mounted to both wall and floor. Some hardware items needed for proper assembly and installation are not included: ex. shim, spacer, high quality silicone or acrylic based bath sealant, etc.

- DO NOT USE PLUMBERS PUTTY OR ANY OIL BASED SEALANT AS THIS WILL STAIN THE MARBLE.

Note: Some cutting of the baseboard, and drilling may be necessary to mount console base to wall.

PRE-ASSEMBLY:

- Remove all parts and hardware from the box and lay out on a clear carpeted or scratch-free work surface, as this will avoid damaging parts during assembly. The shipping box provides an ideal work surface.
- Do not dispose of any packaging or contents of the shipping carton until assembly is completed to avoid accidentally discarding small parts or hardware.
- Use the parts and hardware lists below to identify and separate each of the pieces included.
- The illustrations provided allow for easier assembly when used in conjunction with the assembly instructions. The use of power tools to aid in assembly is not recommended. Power tools can damage hardware and split wood.
- Keep all parts out of the reach of children.
- A standard 8" spread faucet should be used with this Marble top console.

Note: Consoles usually need to be leveled and mounted to both wall and floor. Some hardware items needed for proper assembly and installation are not included: ex. shim, spacer, high quality silicone or acrylic based bath sealant, etc.

DO NOT USE PLUMBERS PUTTY OR ANY OIL BASED SEALANT AS THIS WILL STAIN THE MARBLE.

Note: Some cutting of the baseboard, and drilling may be necessary to mount console base to wall

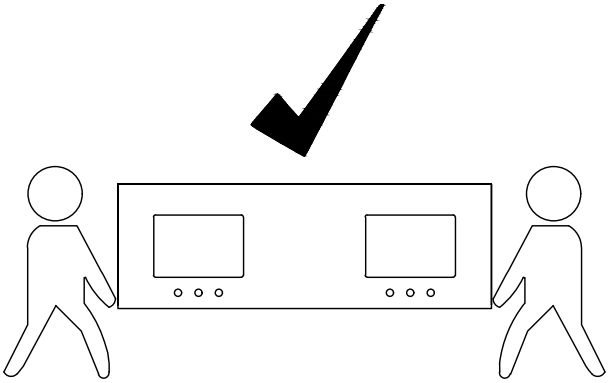

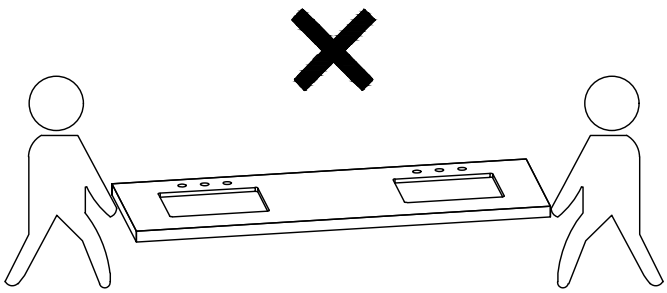

Step 1

To Seal The Connection Between The Basin Edge And The Bottom Of The Stone Top.
Caulking must be Silicon or Acrylic based.
Plumbers putty must not be used as it will stain the stone top.

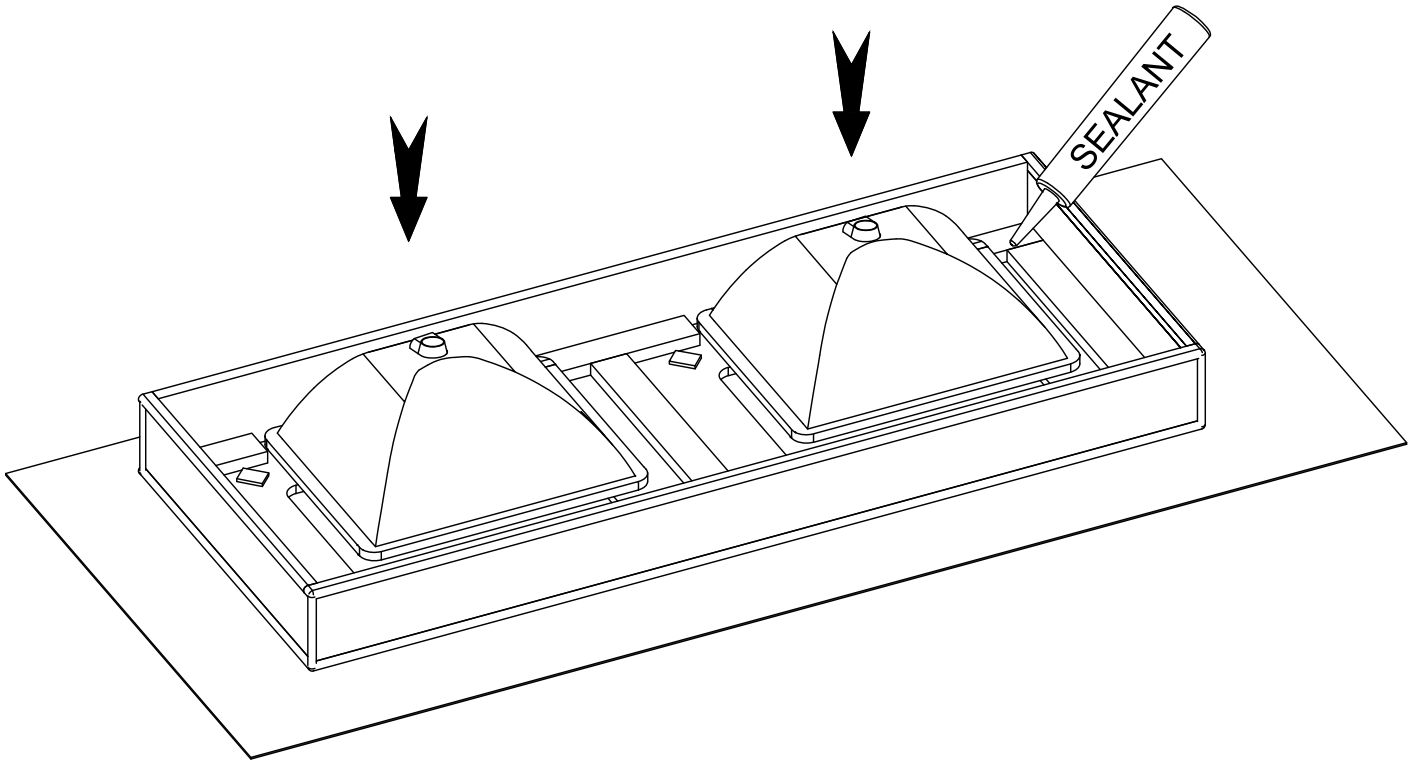

Step 2

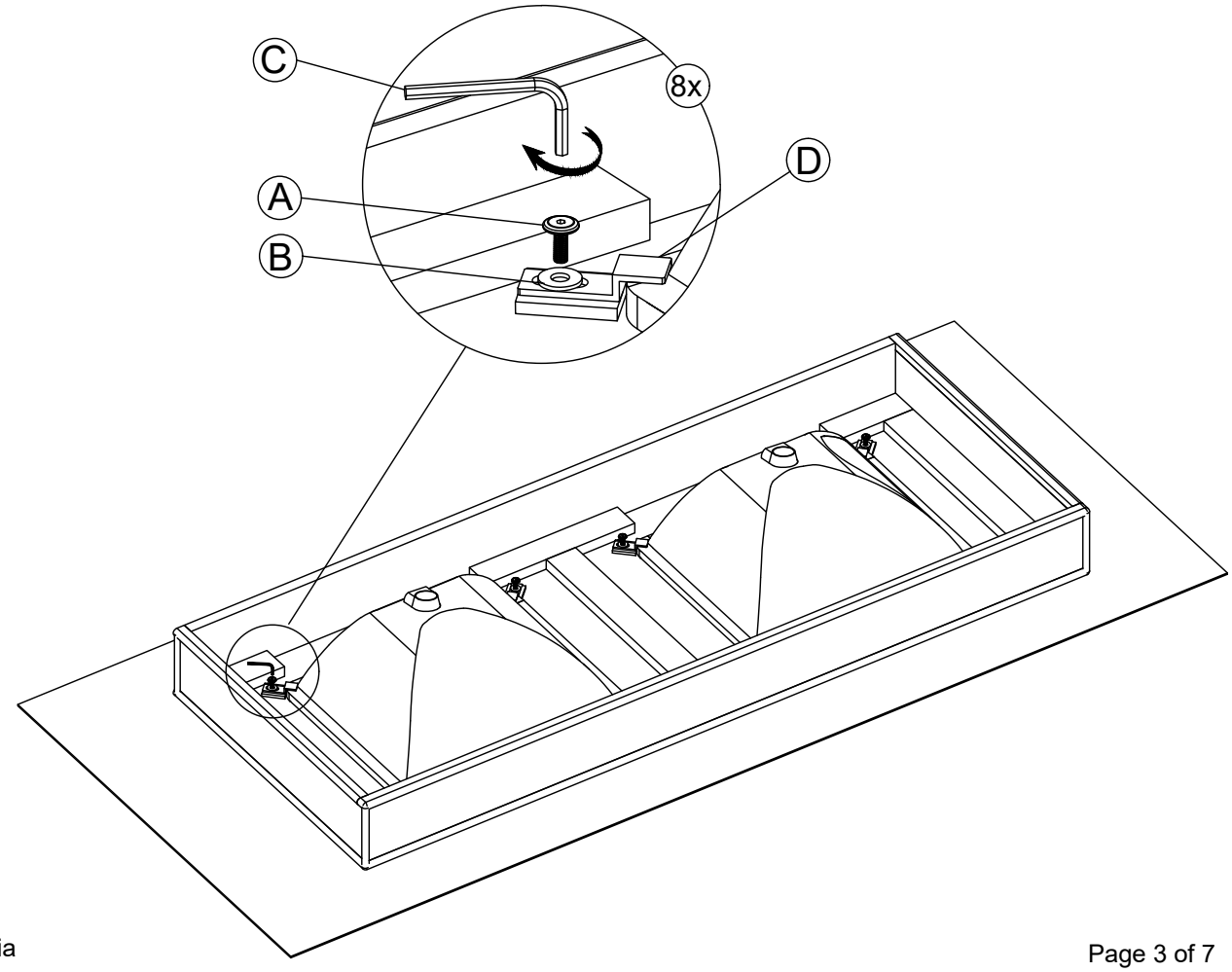

Step 3

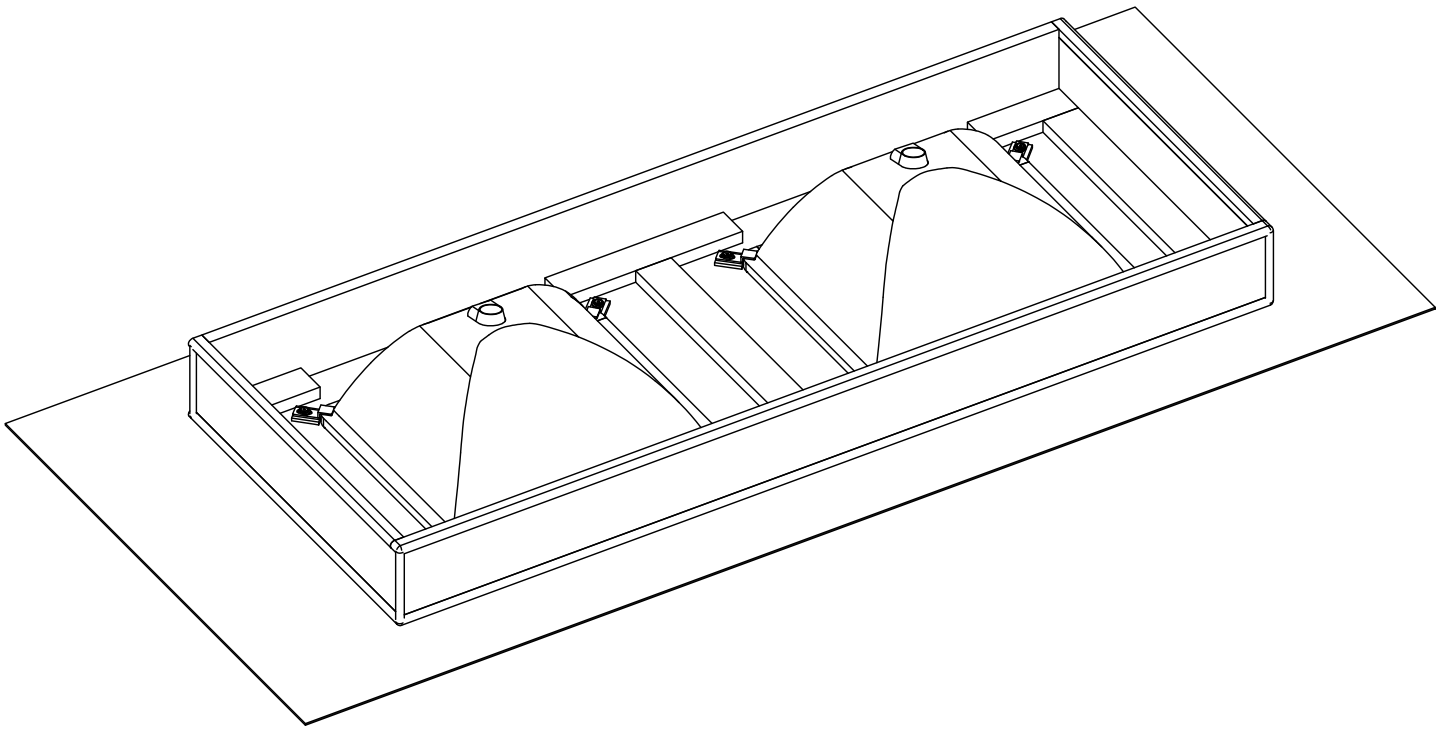

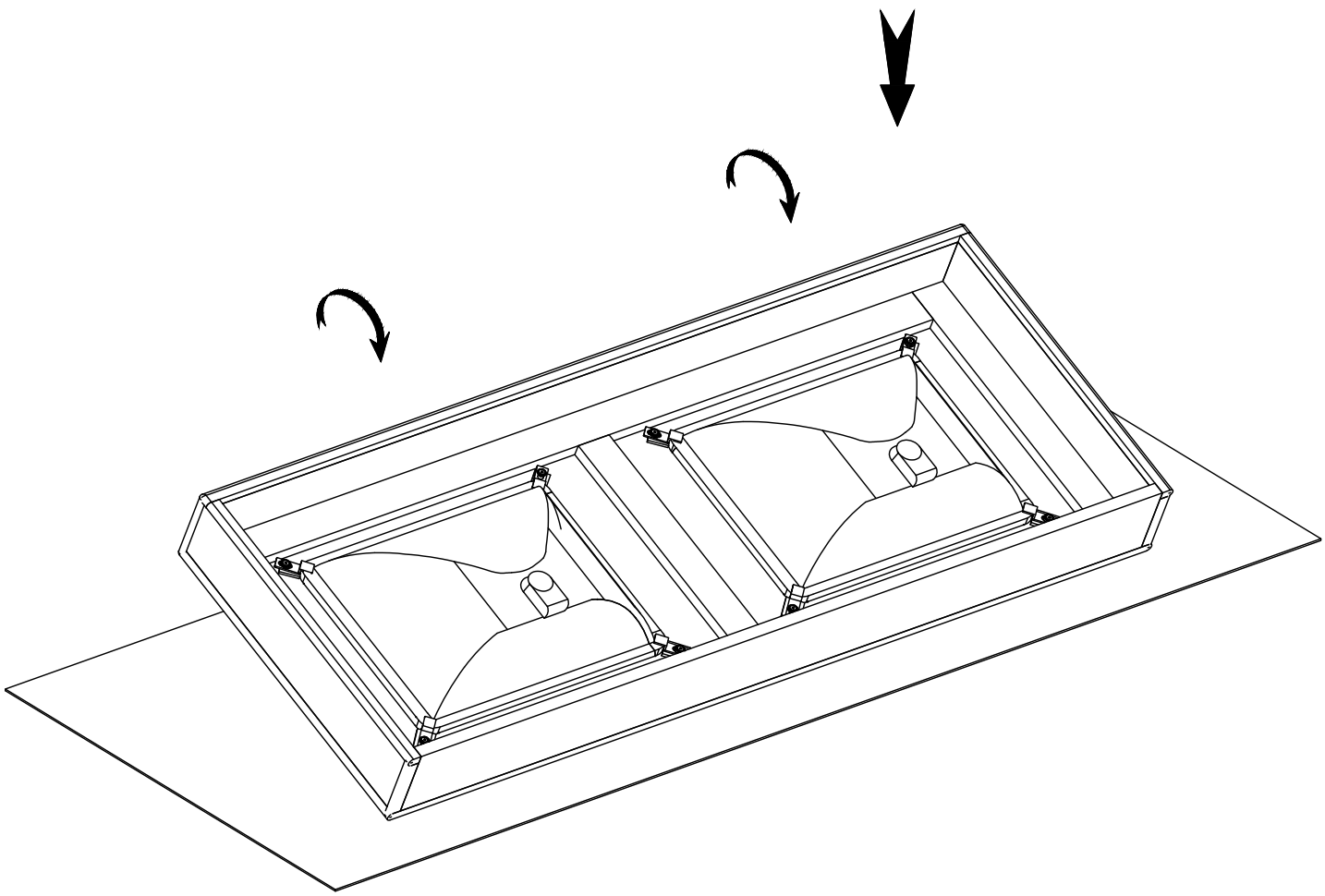

Step 4

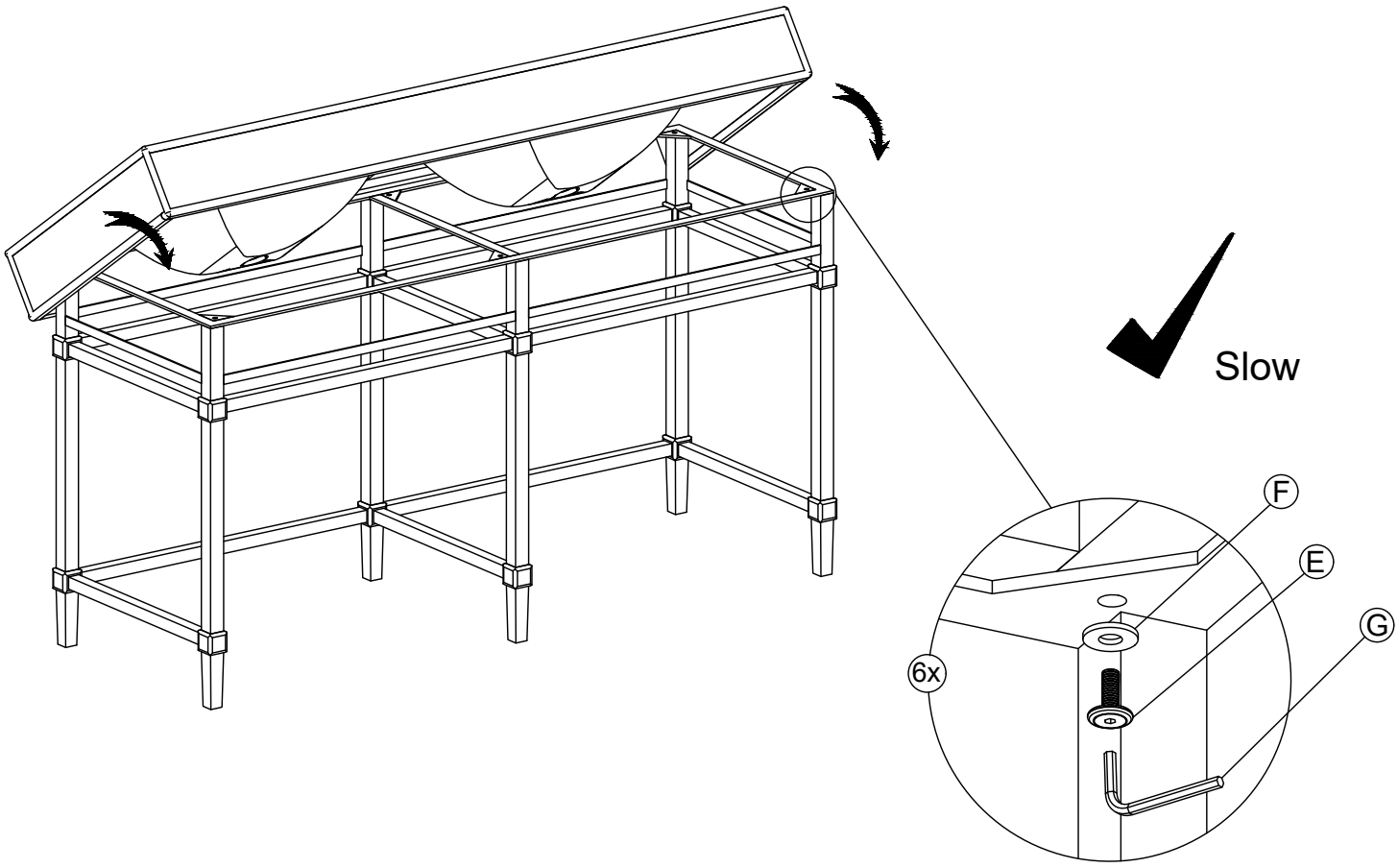

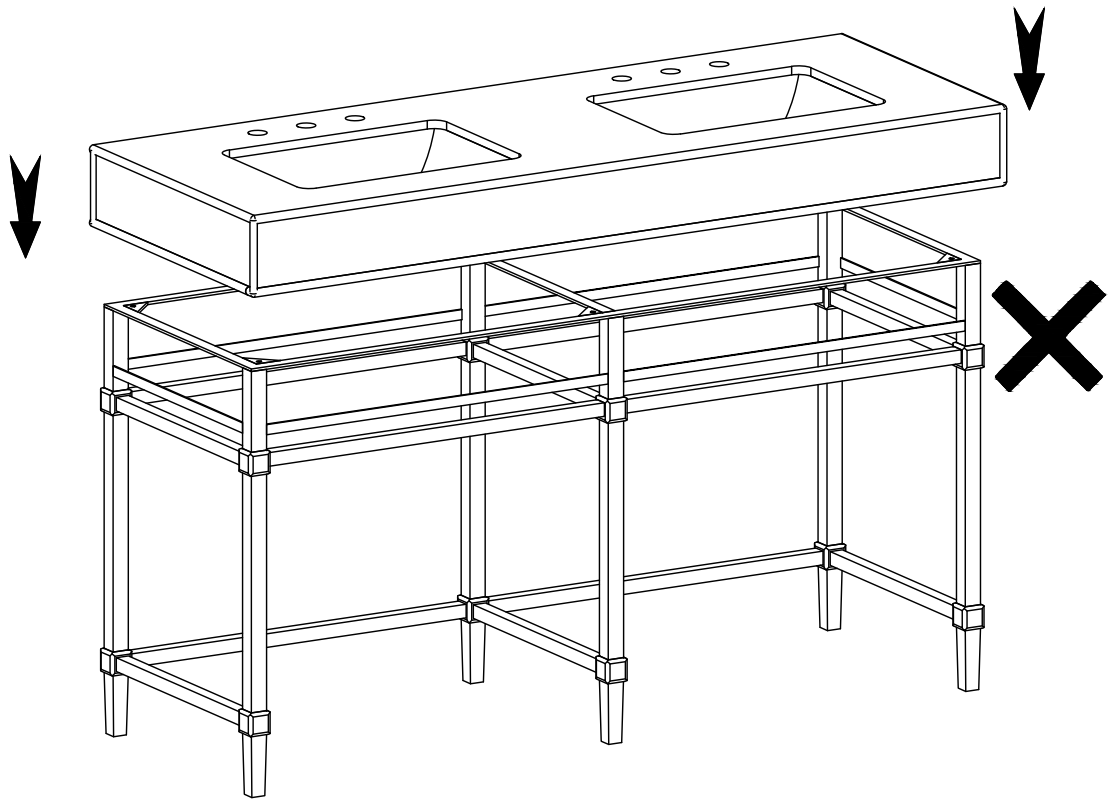

Step 5

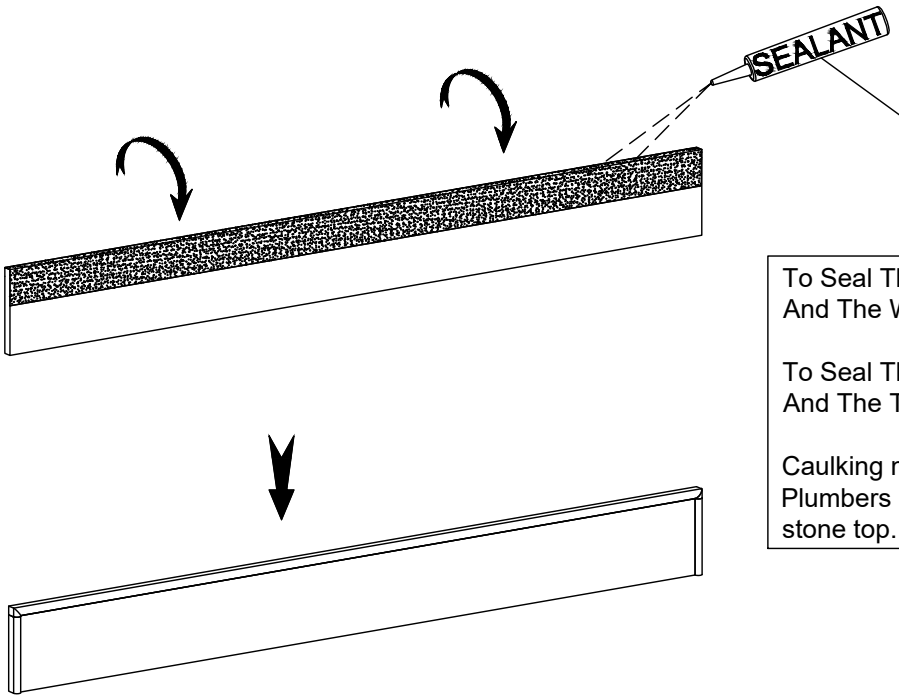

To Seal The Connection Between The Backsplash And The Wall.

To Seal The Connection Between The Backsplash And The Top Of The Stone.

Caulking must be Sillcon or Acrylic based. Plumbers putty must not be used as it will stain the stone top.

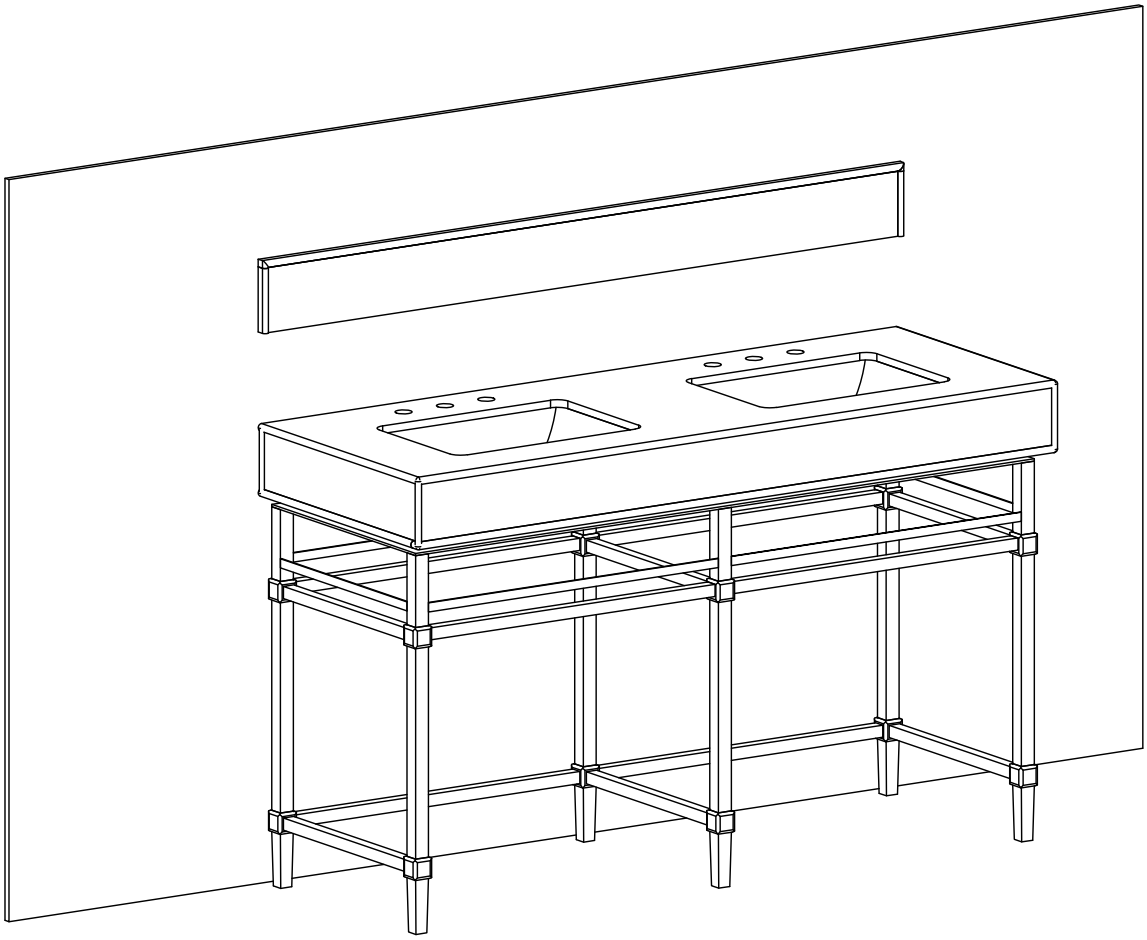

Step 6

Adjusting Floor Levelers

Your furniture has been expertly crafted and pre-adjusted by professionals. However, slight shifts can occur during transportation. If you notice that the doors are not perfectly aligned or the furniture wobbles, a quick adjustment can help ensure stability and a seamless look.

Step 1: Adjust the Floor Levelers

Check for Stability – Place the furniture in its final position on a level surface. If it wobbles or doesn't sit evenly, the floor levelers need adjusting.
Locate the Levelers – These are small adjustable feet found at the bottom corners of your furniture.
Adjust as Needed – Using your hand or a wrench, turn the levelers clockwise to raise or counterclockwise to lower the furniture. Make small adjustments and check stability after each turn.

