10×16FT Metal Carport Manual

Dear Customer,
Thank you for choosing our product! Toensure the safe and secure delivery of your items, we have opted for a split-box delivery method. We appreciate your patience as you await the arrival of all the packages before proceeding with the installation. Additionally, please follow the important recommendations below during the installation and usage of our product:

1.Before beginning assembly, please carefully read this manual.
2.Ensure all components are present in the carton, matching the types and quantities listed on each page.
3.Follow the assembly steps in the order specified in this manual.
4.Keep this manual in a safe place for future reference.

Our objective is to provide you with the highest quality and safest product experience. If you have any questions regarding installation or usage, please feel free to contact our customer service team.
Once again, thank you for choosing ourproduct, and we wish you a delightful user experience!

Phone:3022415039/6605538327
Email:aftersale@sannwsginc.com
Please contact us by phone or email.

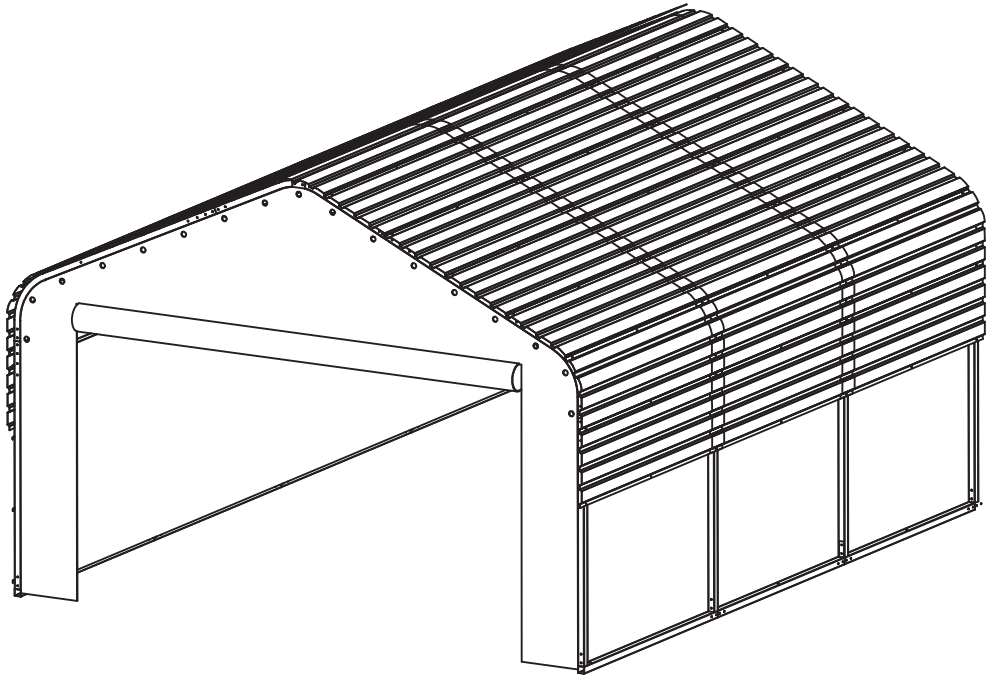

After-sales phone service hours:
US Central Time: 19:00-23:00
Seattle time: 17:00-21:00
US Eastern Time: 20:00-00:00
Toronto time: 20:00-00:00
Germany time: 8:00-11:00
After-sales mailbox service time: 7*24 hours

SAFETY&MAINTENANCE

Safety precautions MUST be followed at all times throughout the construction of your building!

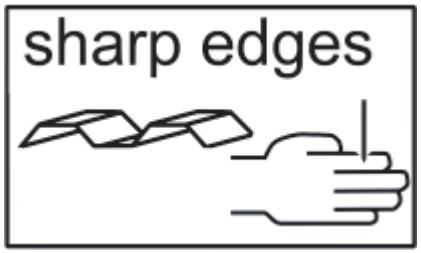

Care must be taken when handling various pieces of your building, since many contain sharp edges. Please wear work gloves, eye protection, and long sleeves when assembling or performing any maintenance on your building.

Practice caution with the tools being used in the assembly of this building. Be familiar with the operation of all power tools.

Do NOT attempt to assemble your building on a windy day. The large panels can catch the wind like a sail, causing them to be whipped around and making construction difficult. Any building left partially assembled may be seriously damaged by even light winds.

Never concentrate your weight on the roof of the building. Additionally, when using a stepladder, always ensure it is fully open and on even ground before climbing.

Keep children and pets away from the worksite during construction and until the building is completely assembled. This will help avoid distractions and any accidents which may occur.

SAFETY&MAINTENANCE

ExteriorCare:

For a long-lasting finish, clean and wax the exterior surface regularly. We recommend washing with a mild soap solution. DO NOT use a power washer, as it may damage the finish. If you live in a high-humidity or coastal area, periodically applying a spray automotive-type wax is highly recommended.

All combustible and corrosive materials must be stored in airtight containers specifically designed for chemical or combustible storage. Immediately clean any spills of corrosive chemicals—such as fertilizers, pesticides, or herbicides—from both interior and exterior surfaces. Please note that rust resulting from chemical exposure is not covered under the warranty.

To help prevent rust from forming or spreading:

Avoid scratching or scraping the coated surfaces, inside and out.

Keep the roof and base perimeter clear of leaves, debris, and moisture buildup. Decaying organic matter can produce acids that accelerate corrosion.

Promptly touch up any scratches, nicks, or visible rust. Ensure the surface is clean, dry, and free of oils or dirt before applying a high-quality touch-up paint in an even coat.

Many paint manufacturers offer rust treatment products. If you notice surface rust, treat it as soon as possible according to the instructions of your chosen paint supplier.

Roof:
Keep the roof free of leaves and snow accumulation. Excessive snow load can cause structural damage and make the building unsafe to enter.

Fasteners:
Periodically inspect all fasteners and retighten as needed.

General Maintenance:
Remove inked part numbers on coated panels using soap and water.

Please note, the manufacturer cannot be held responsible for any consequences due to buildings that are not installed per these instructions, or for damage due to weather conditions or acts of God.

TOOL&EQUIPMENT

Protective Equipment

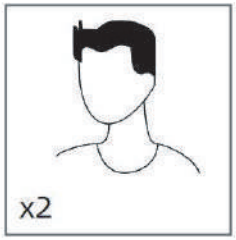

☐ 2 people needed

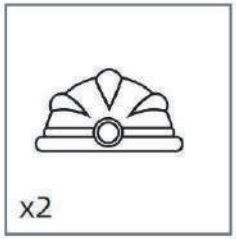

☐ Safety Helmet

☐ Gloves

☐ Goggles

Measuring Tools & Installation Equipment

☐ Tape Measure

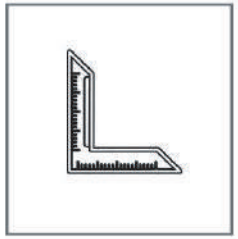

☐ Angle Rule

☐ Triangular Ladder

☐ Mallet

☐ SpannerC10

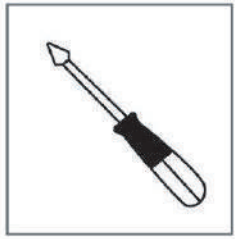

☐ Cross Screwdriver

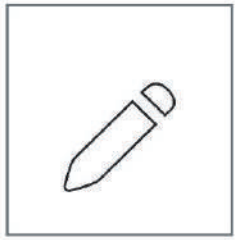

☐ Marking Pen

assembly parts list

1	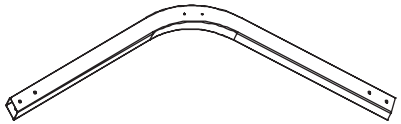	x4
2	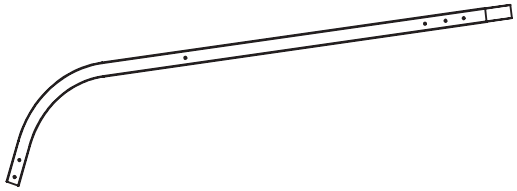	x8
3	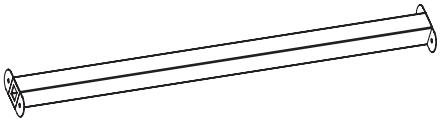	x12
4		x8

5	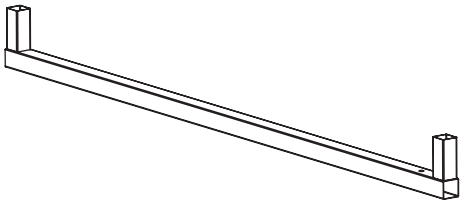	x4
7	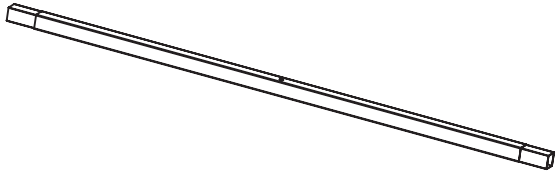	x2
8	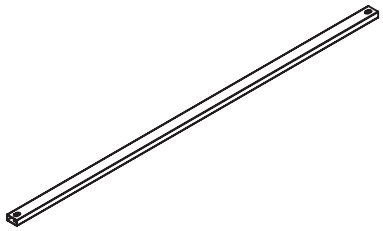	x4

assembly parts list

10	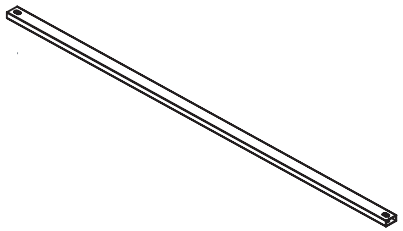	x8	F2		x40
11	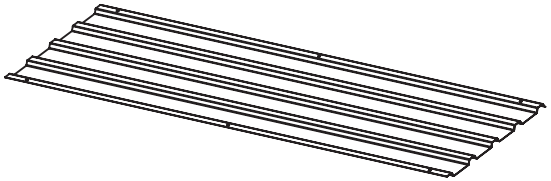	x33	F3		x200
12	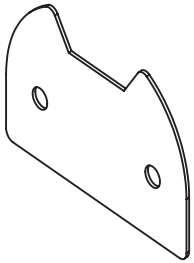	x4	F4	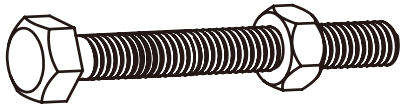	x40
F1	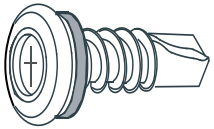	x234	F5	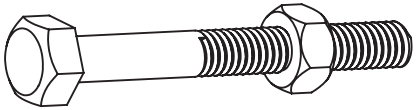	X24

assembly parts list

F6	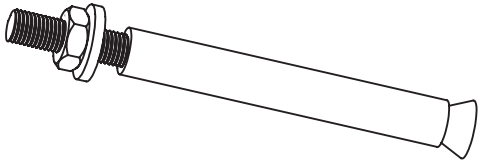	X6	A2		X2
F7		x4			
F8	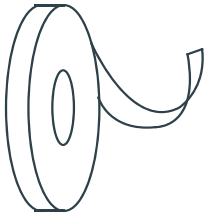	x1			
A1		X2			

exploded view

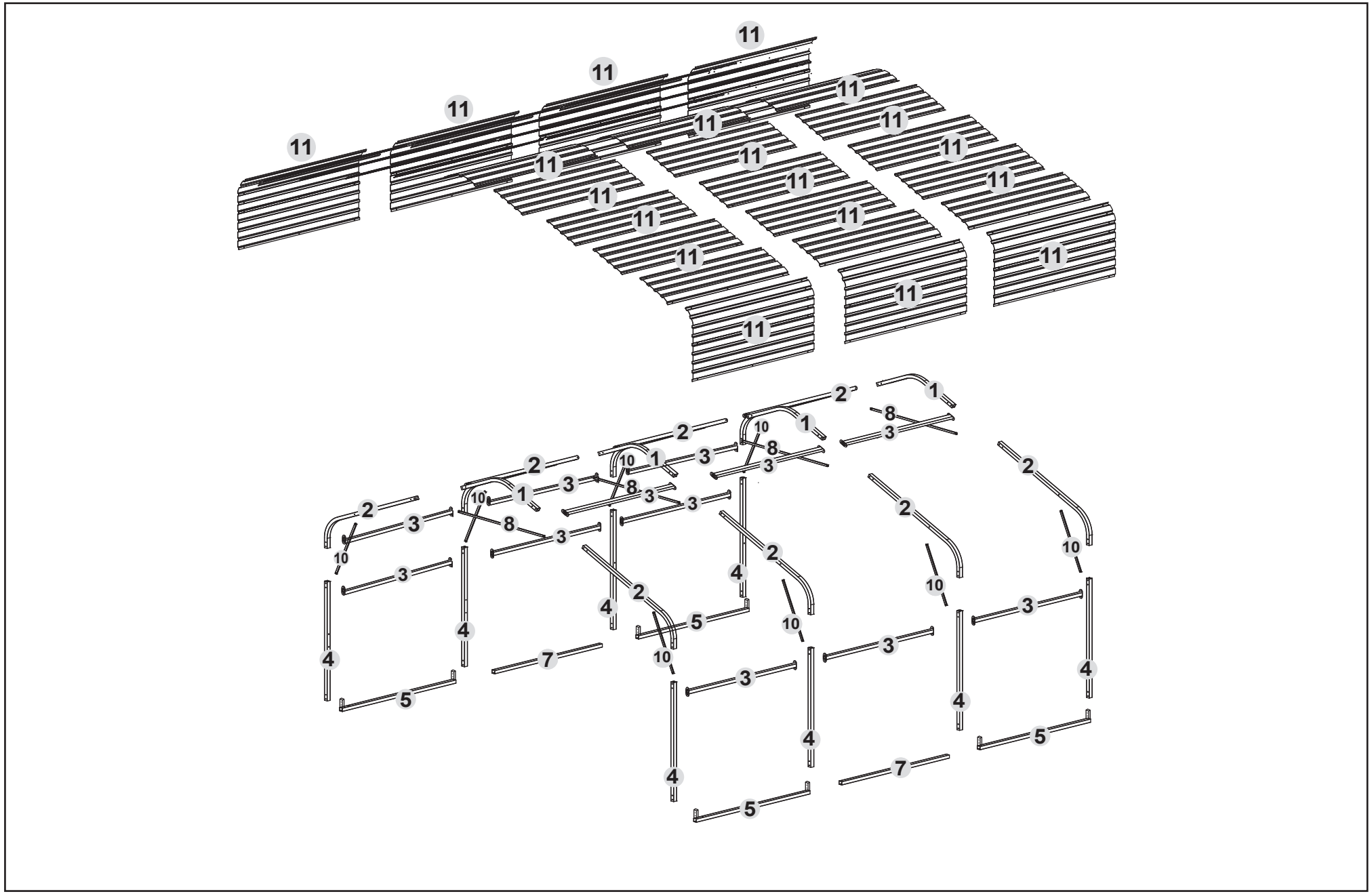

assembly parts list

B1		X50
B2	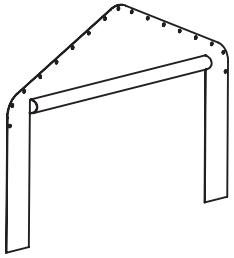	X1
B3	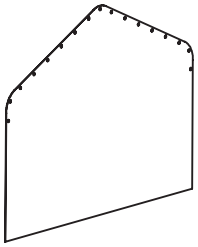	X1
B4	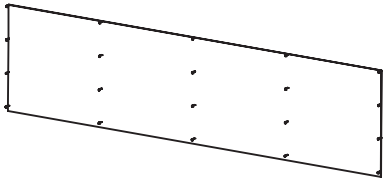	X2

exploded view

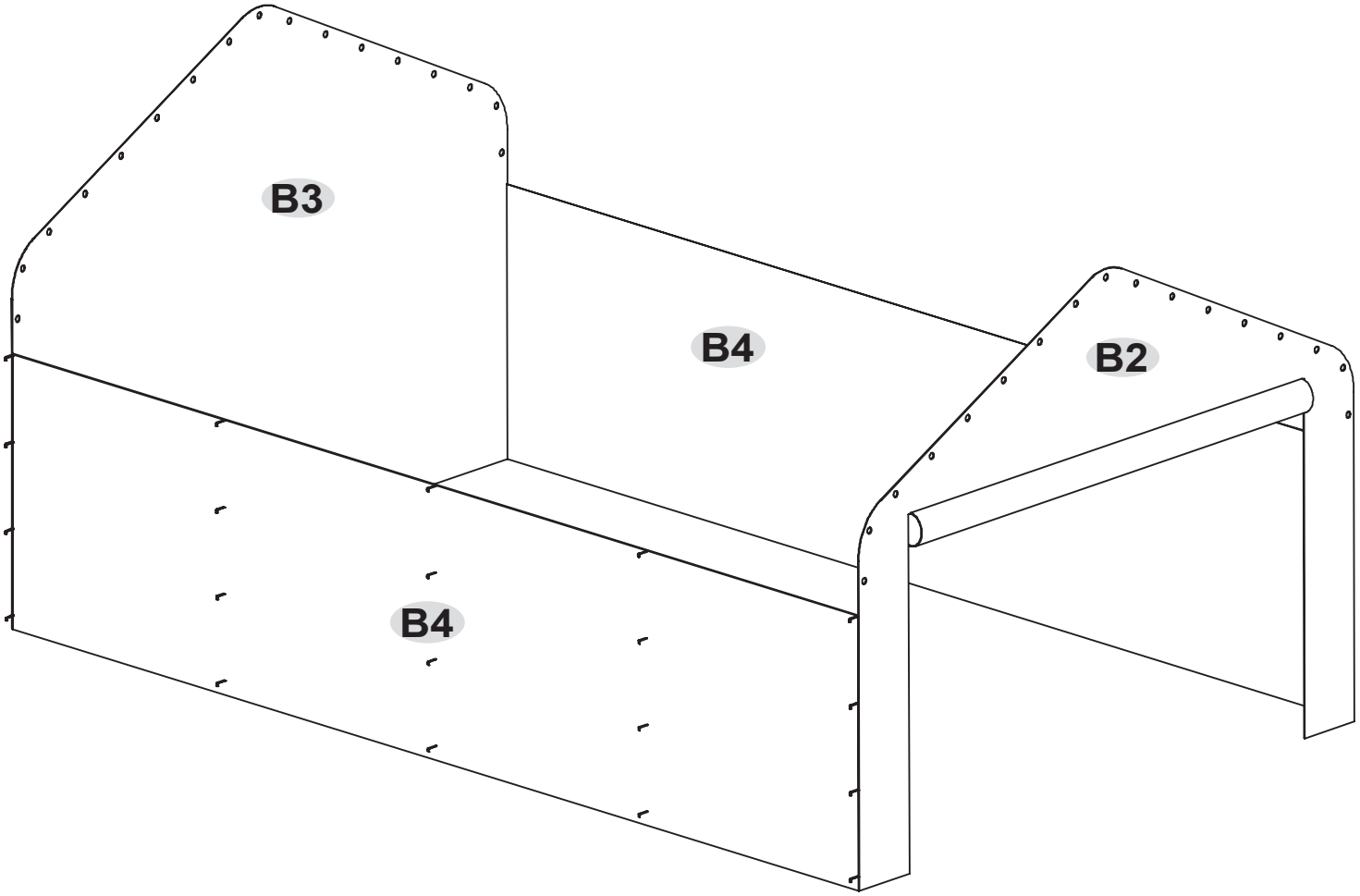

Installation steps

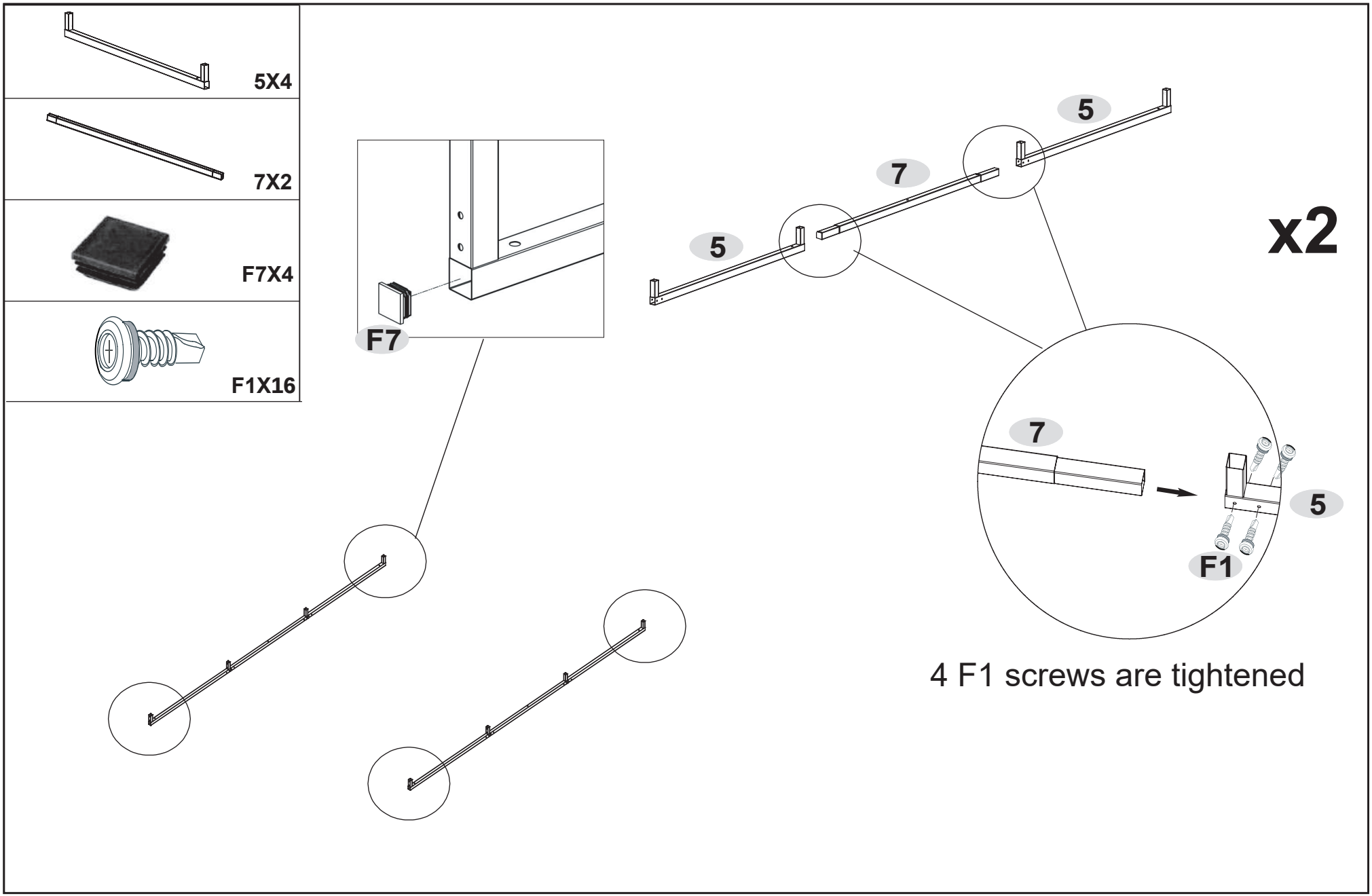

Installation steps

1X4

12X4

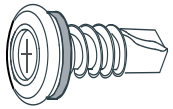

F1X8

x4

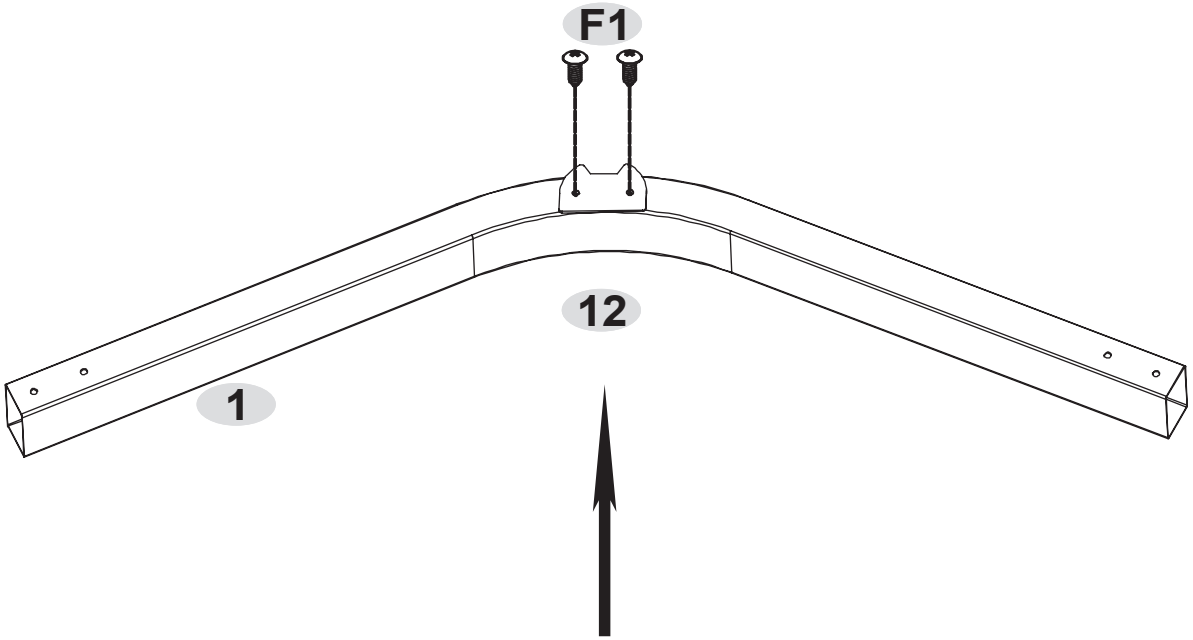

Attention: Center position of tube 1

Installation steps

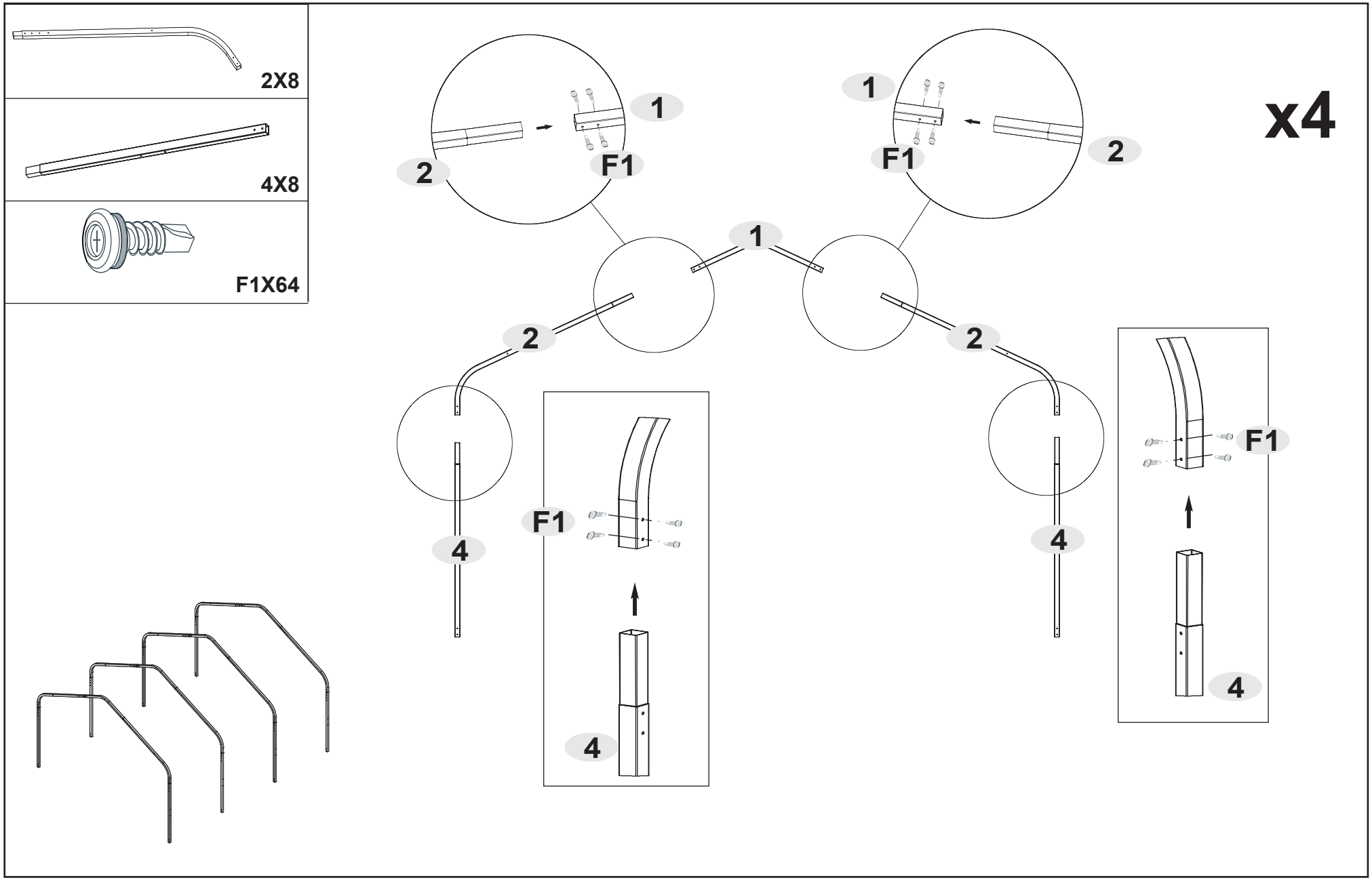

Installation steps

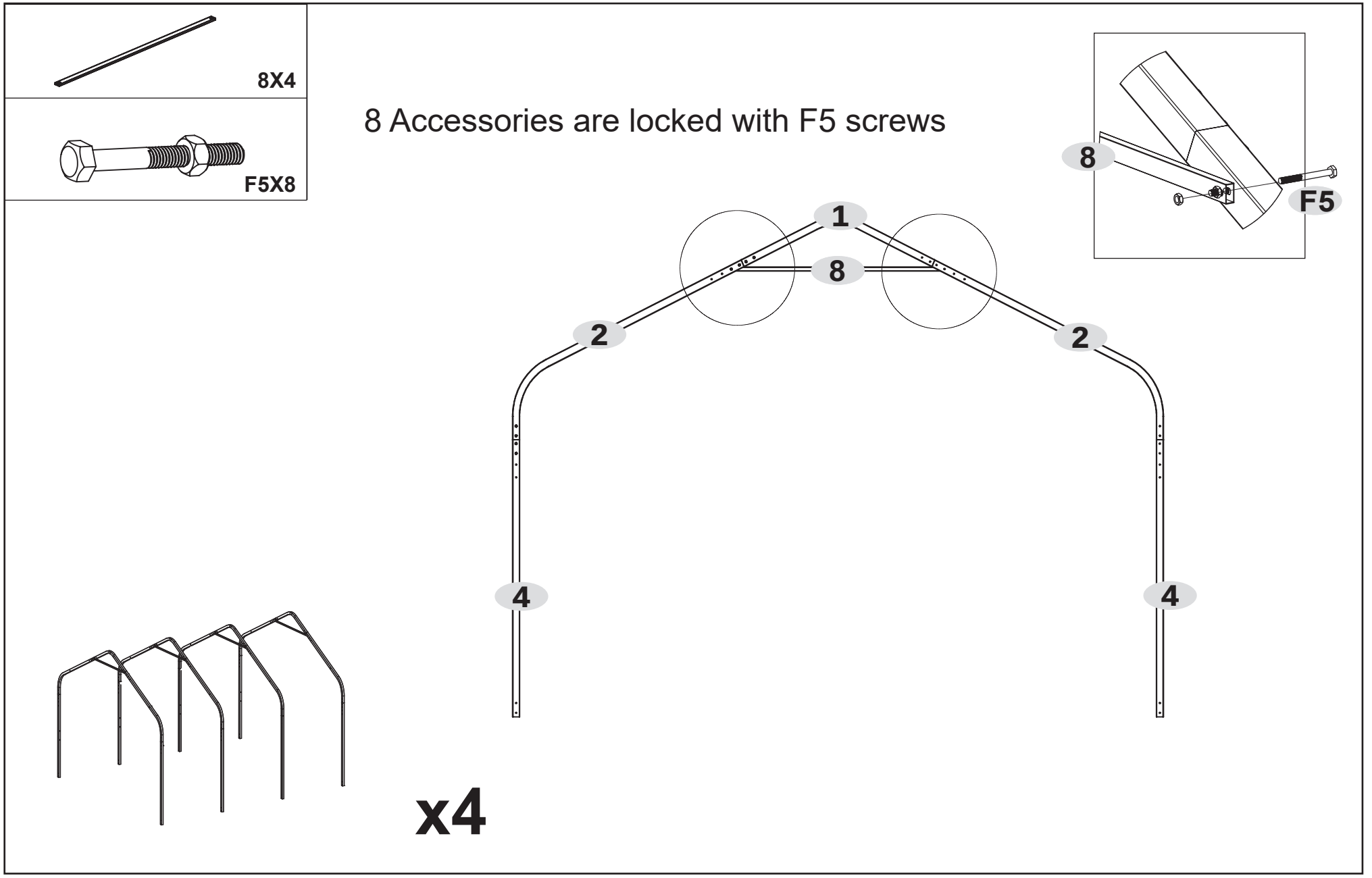

Installation steps

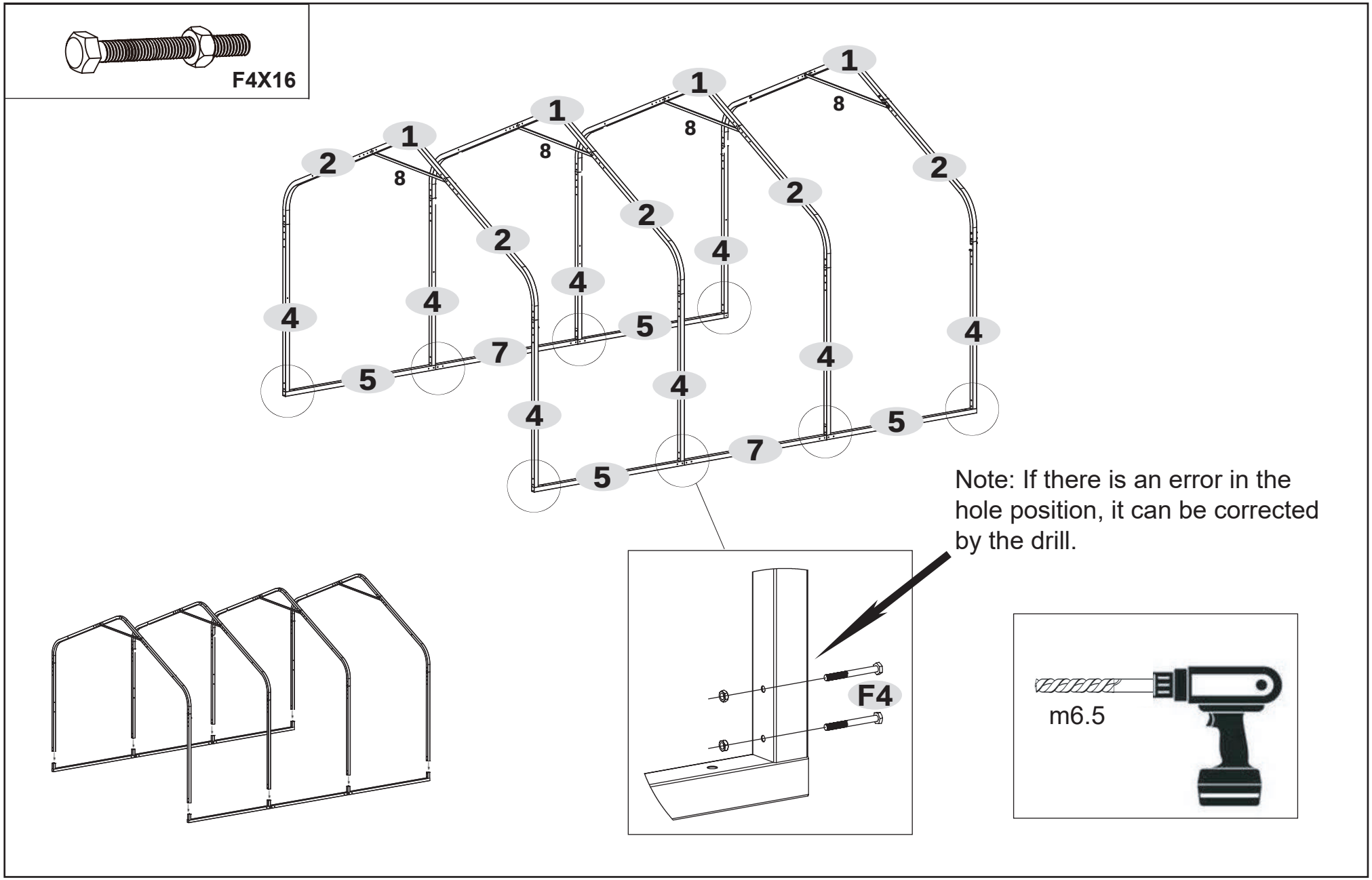

Installation steps

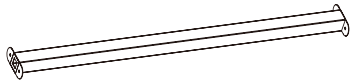

3X6

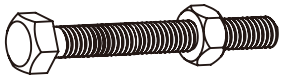

F4X16

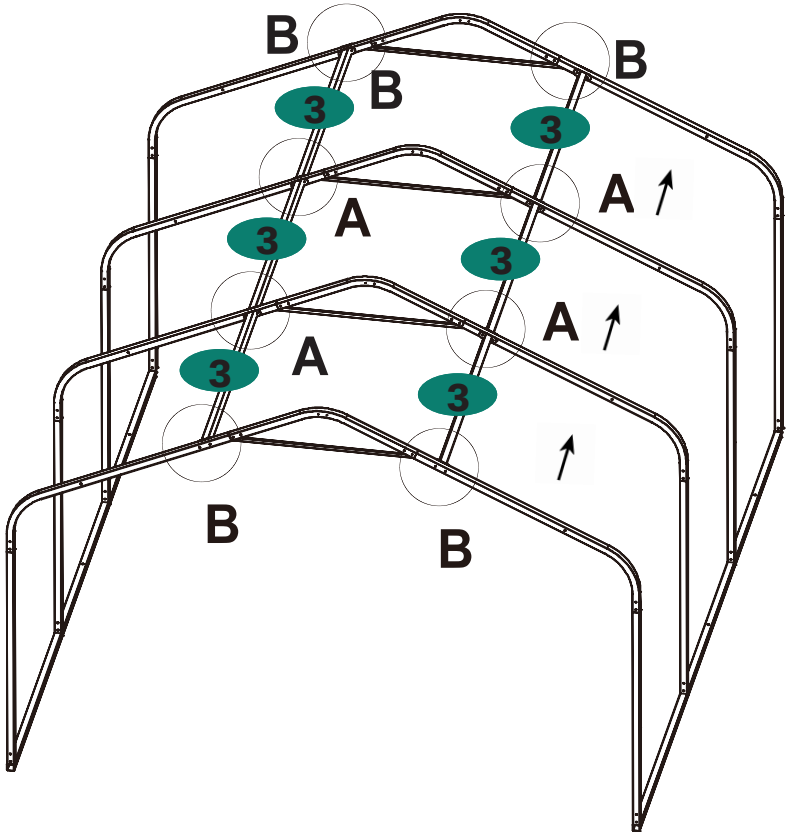

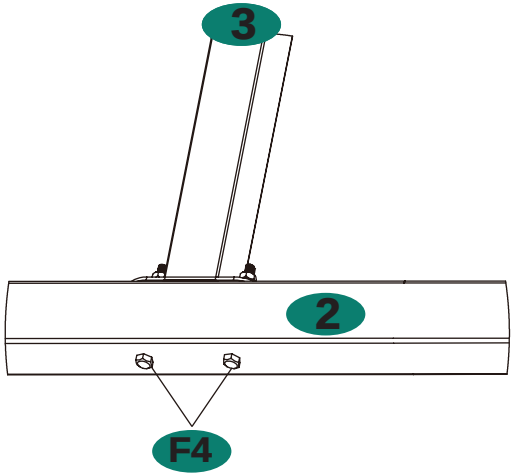

Following the direction indicated by the arrows, secure part 3 onto part 2 using F4 fittings in sequence.
Note: Section A uses one F4 fitting shared by two part 3 fittings.

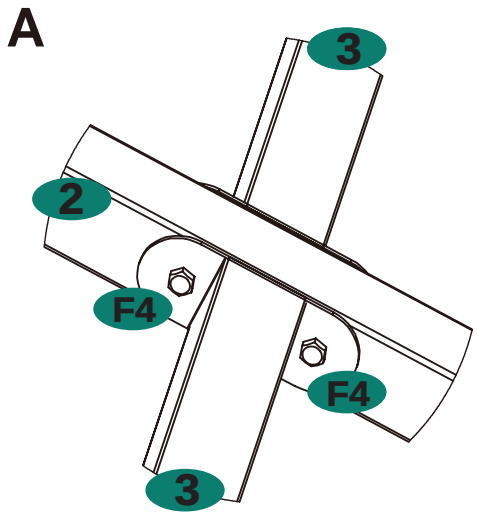

Installation steps

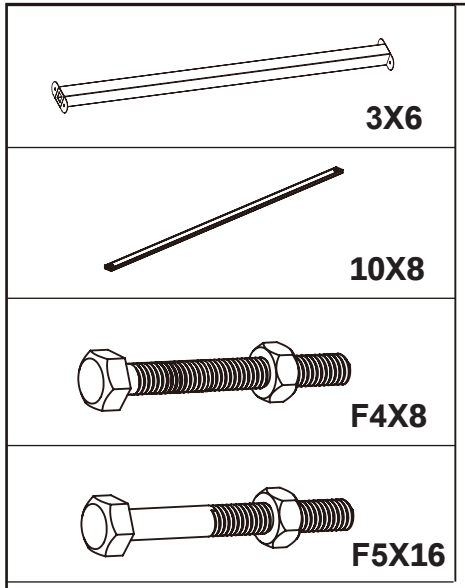

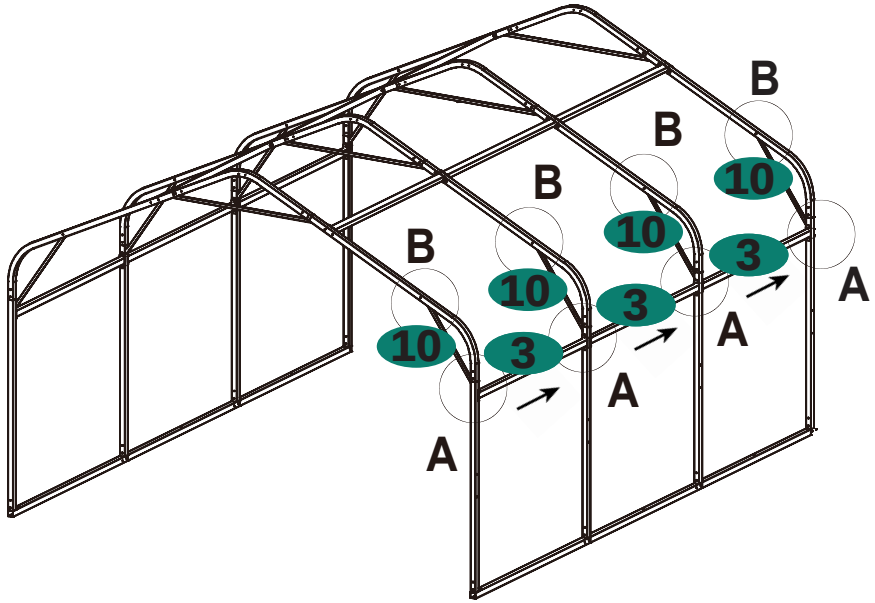

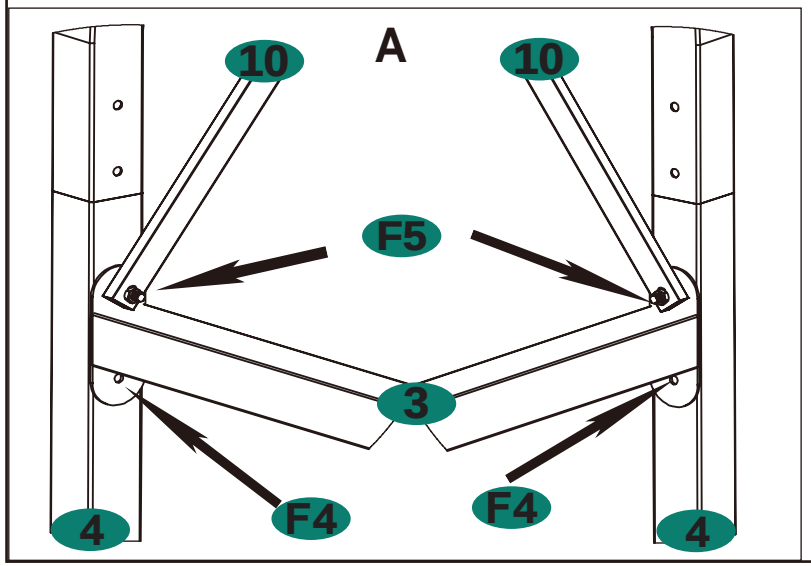

First install Part B: Secure Part 9 to Part 2 using fitting F4.
Do not tighten the screws first• •

After completing Section B, install Section A:
Following the direction of the arrows , use fitting F4 to secure fitting 3 to the rod of fitting 4, starting with the lower holes.
Then, using fitting F5, connect the other end of fitting 9 to the upper hole section of fitting 3, following the arrow direction. The F5 fittings on both ends of Section A will pass through fittings 4-3-9 in sequence, while the F5 fitting on the middle Section A will pass through fittings 9 -3-4-3 in sequence.

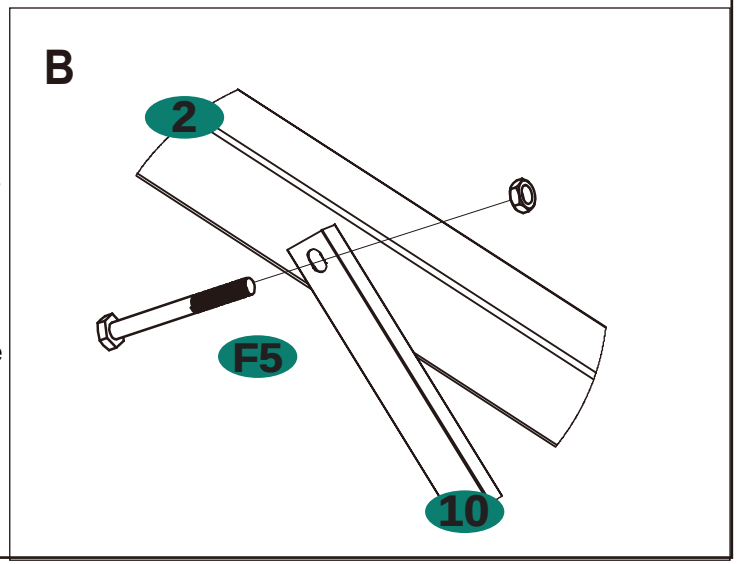

Installation steps

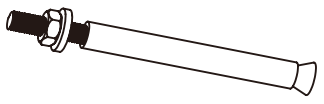

First,useadrillbittodrillholeson theground, andtheninstallthecorner screws.

Note: Be sure measurements diagonally across the overall frame are within 0.2in of the same distance after completing this step.

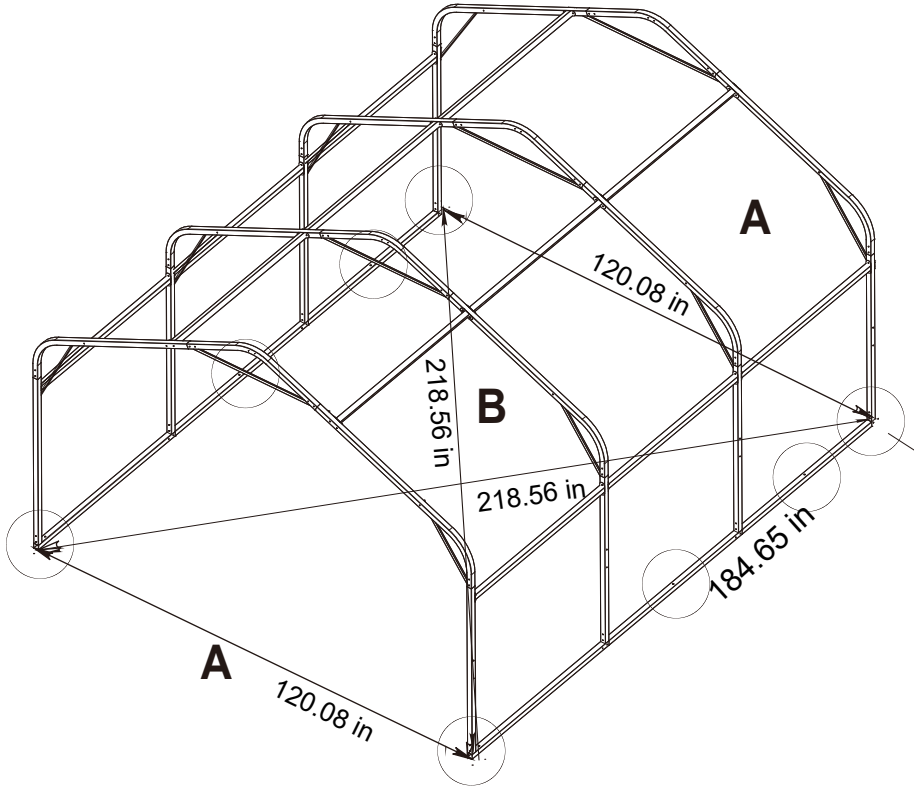

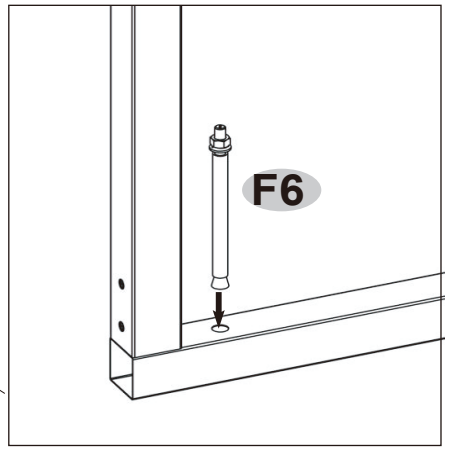

Pay attention to the intersection size of A/B

Installation steps

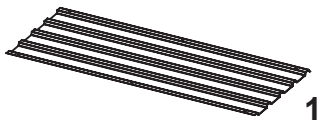

11X33

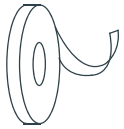

F8

Attention: First, paste the F8 sealing strip onto the 11 color steel tile, and then cut it off

x33

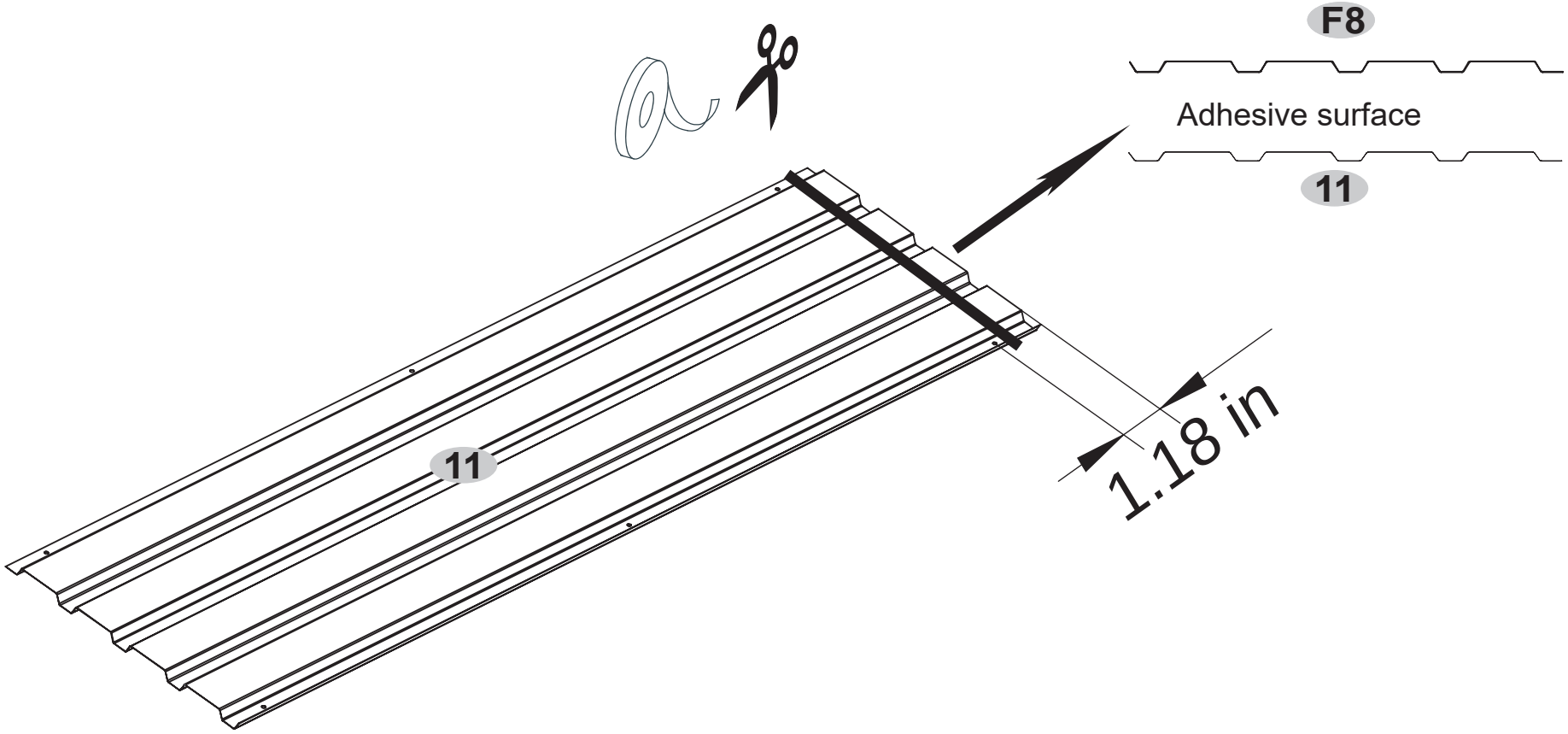

Installation steps

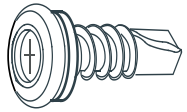

F1X6

F3X6

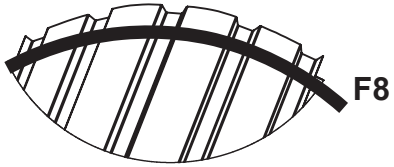

Tips：Secure the other end of the panel with screws,do not secure this end.

Locate the center point of Component 11's plate. Align the center point of Component 11's plate with the groove on Component 12. Secure it to the rod of Component 1 using F1/F3 components. Press firmly downward to drive the screws in.

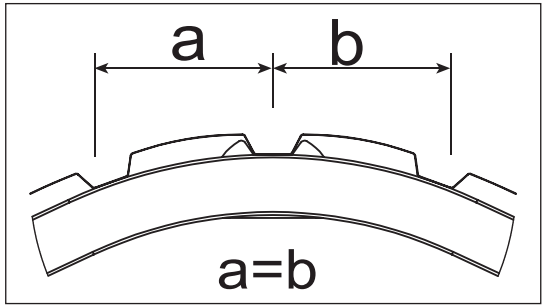

D

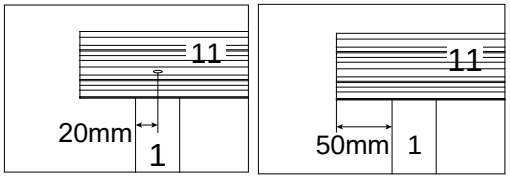

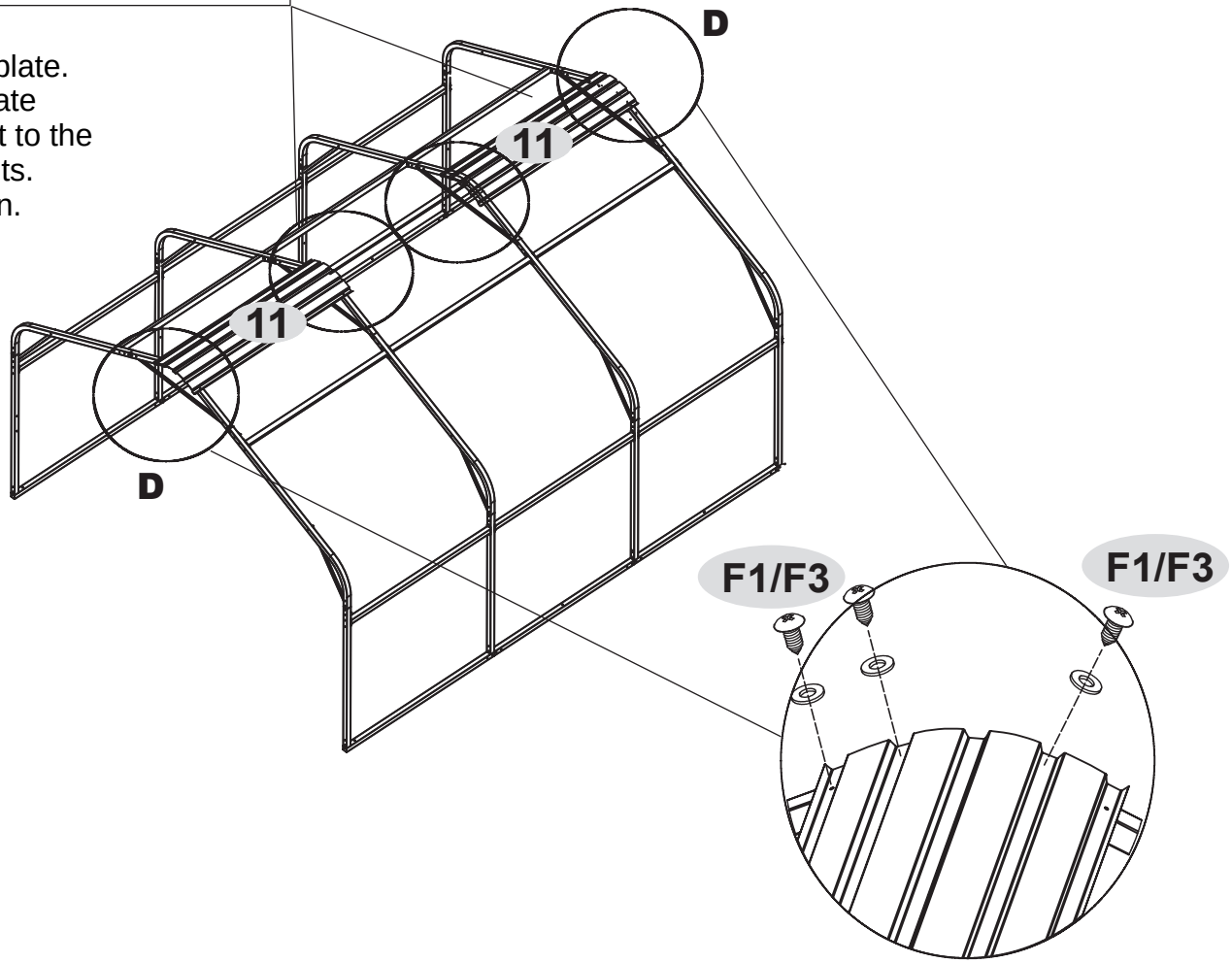

Installation steps

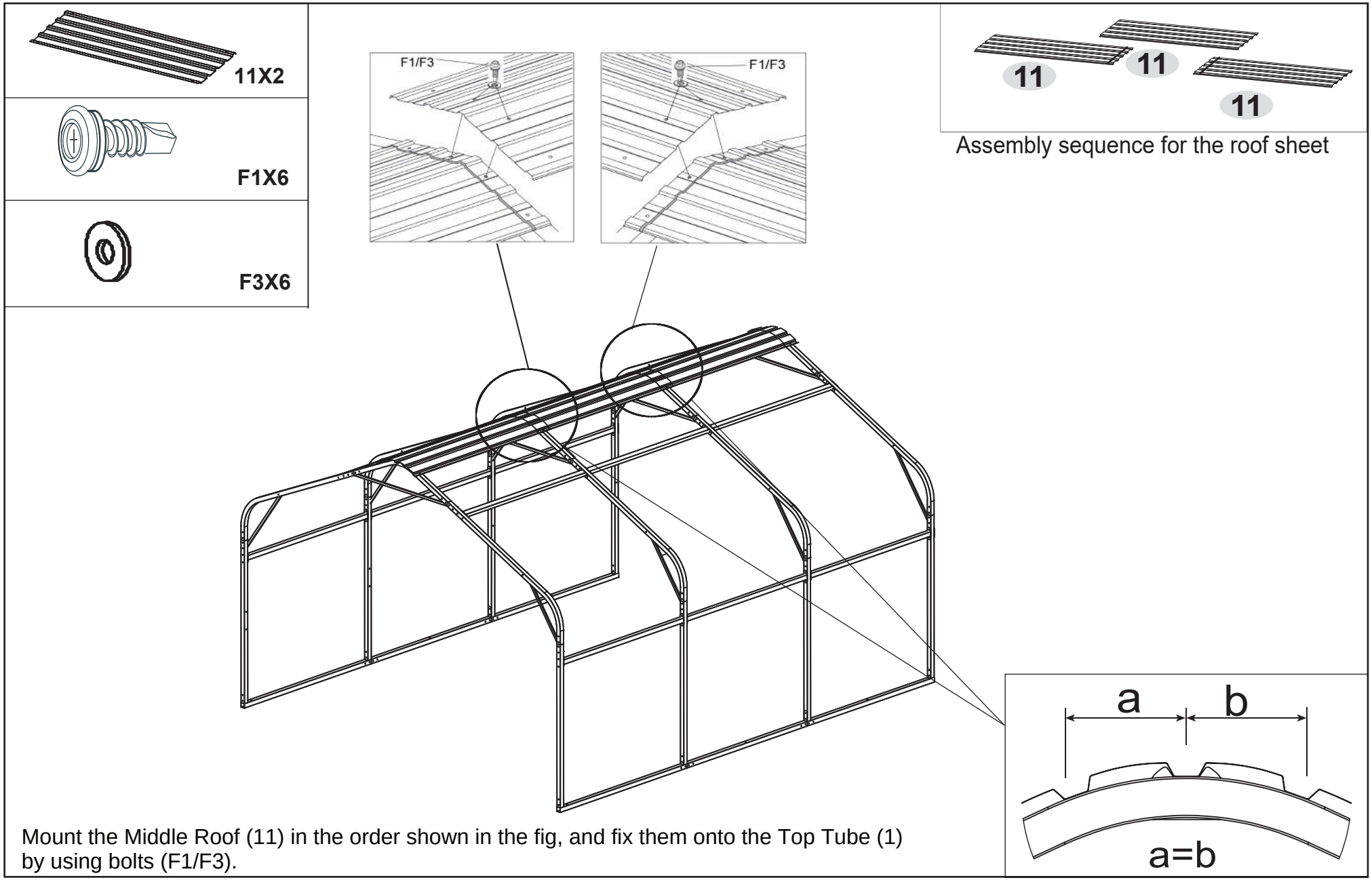

Assembly sequence for the roof sheet

Mount the Middle Roof (11) in the order shown in the fig, and fix them onto the Top Tube (1) by using bolts (F1/F3).

Installation steps

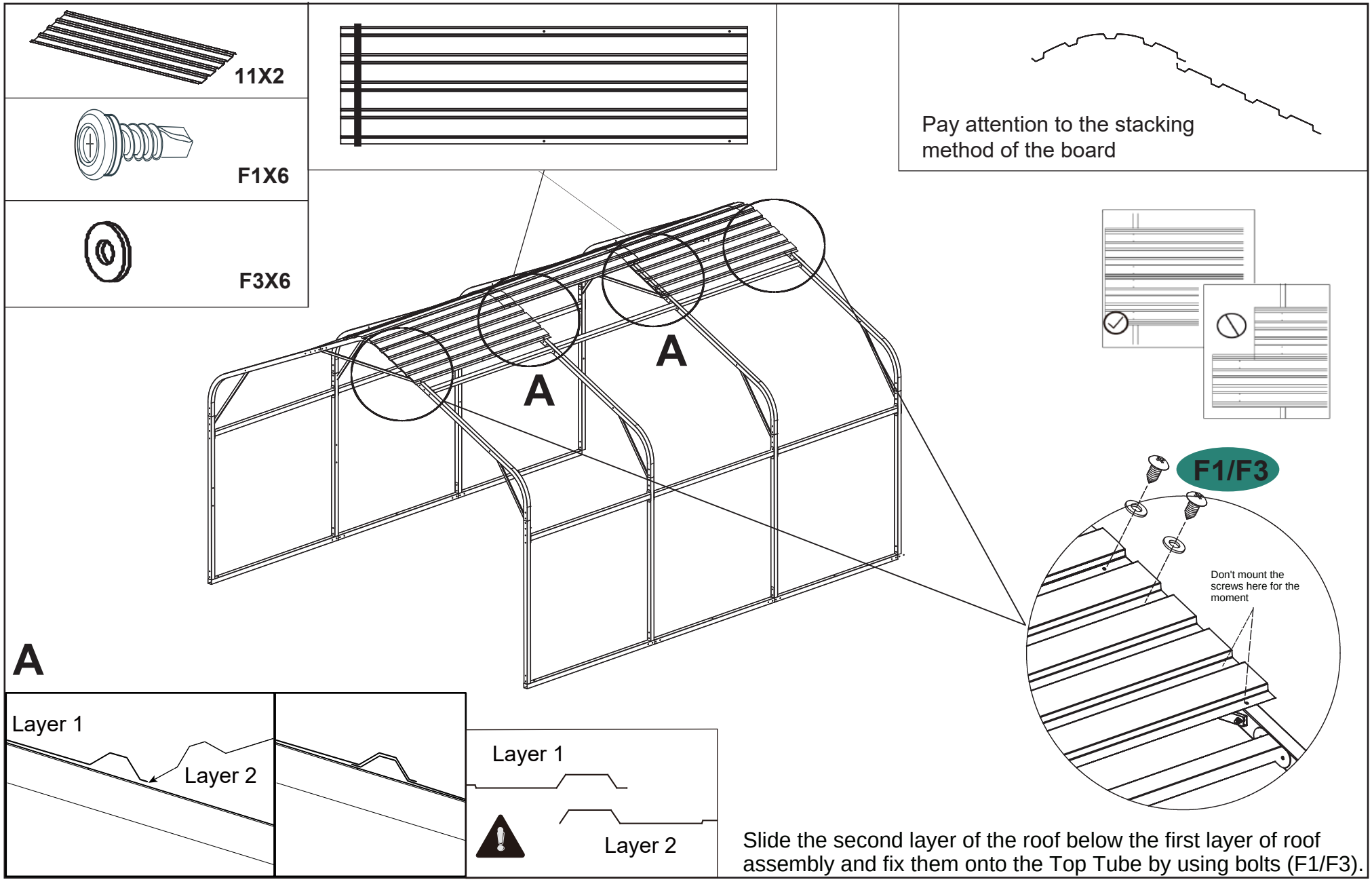

Installation steps

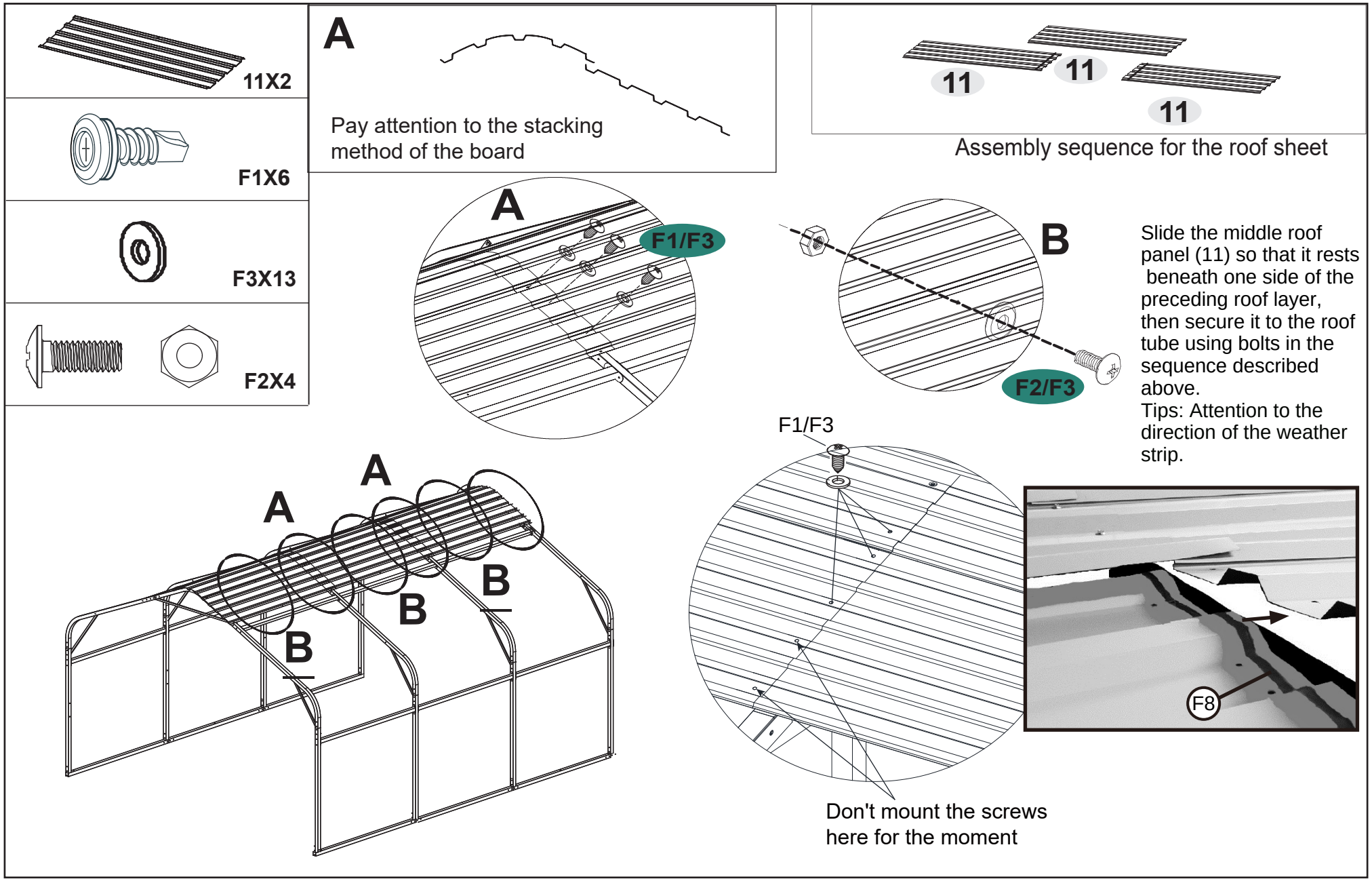

Installation steps

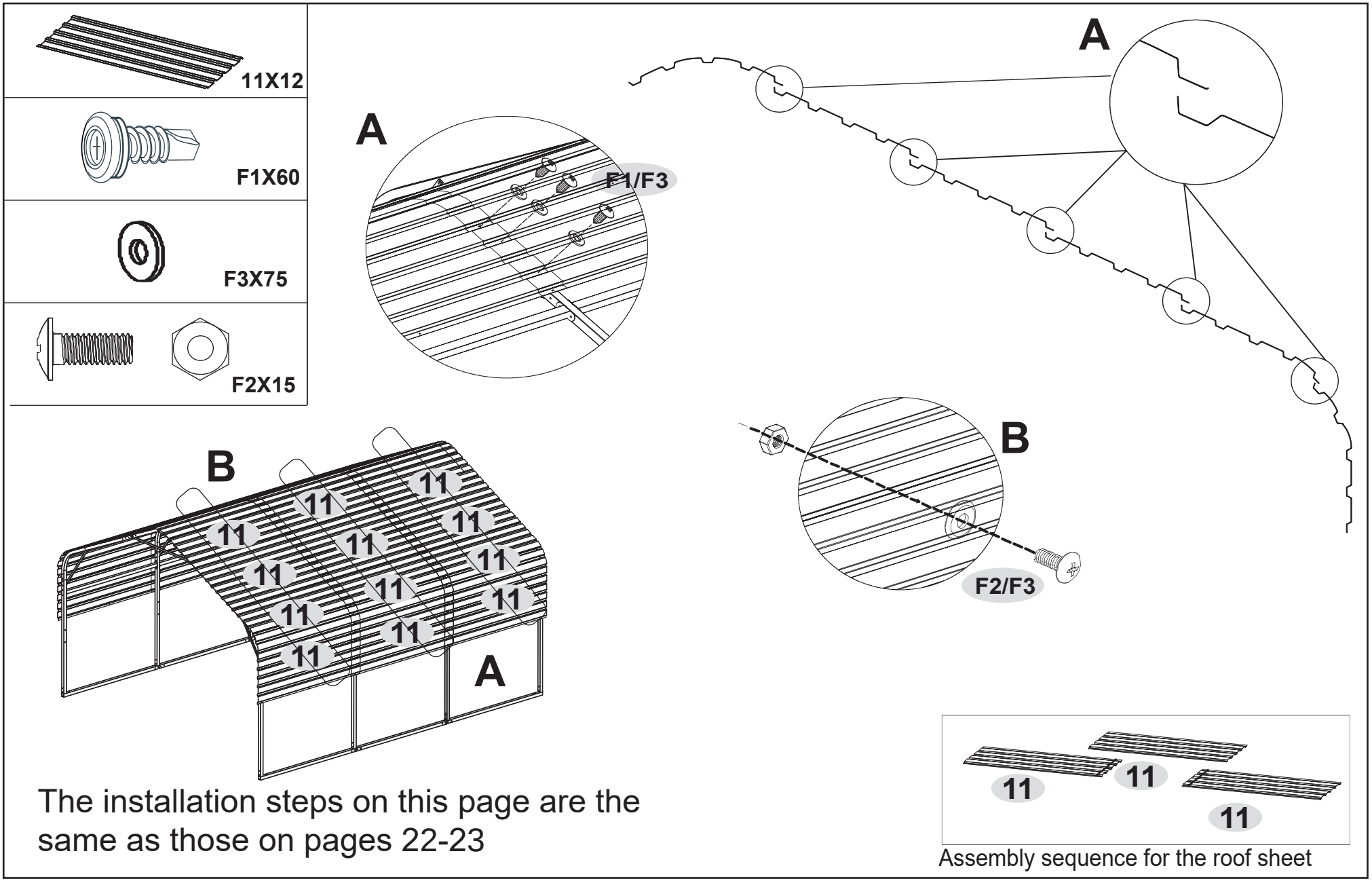

The installation steps on this page are the same as those on pages 22-23

Assembly sequence for the roof sheet

Installation steps

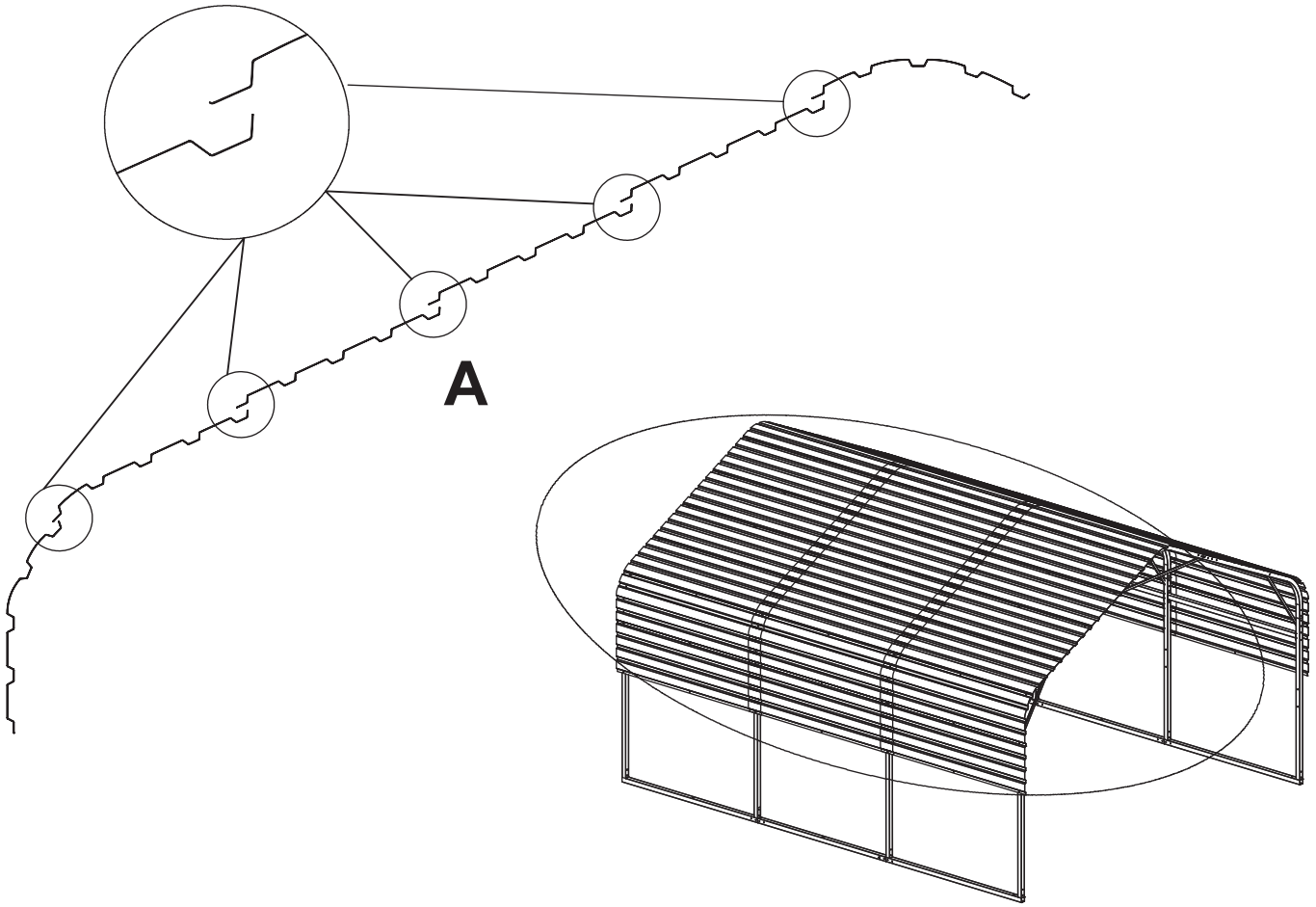

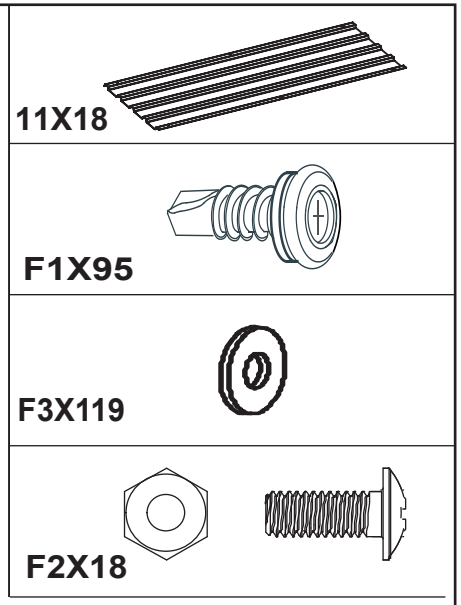

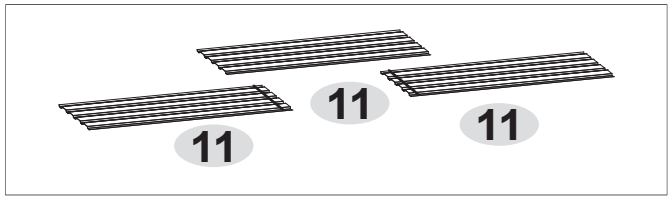

Assembly sequence for the roof sheet

The installation steps on this page are the same as those on pages 22-23-24

Installation steps

A1X2

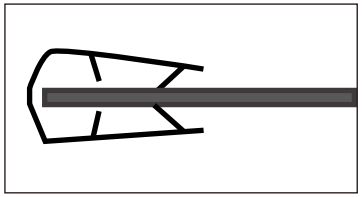

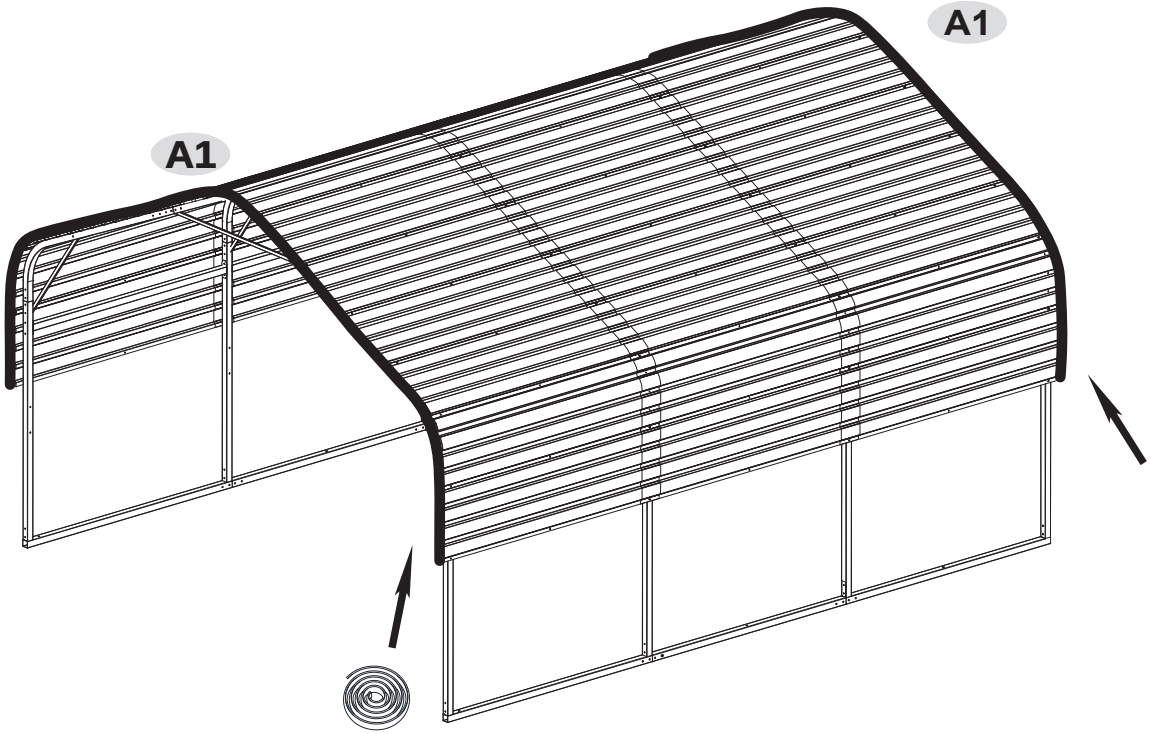

Install the A1 edging strip in the direction indicated by the arrow

Installation steps

B1		X14
B2	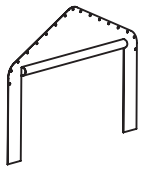	X1
B3	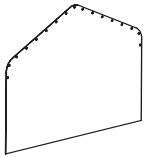	X1

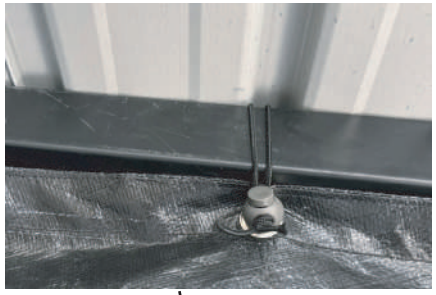

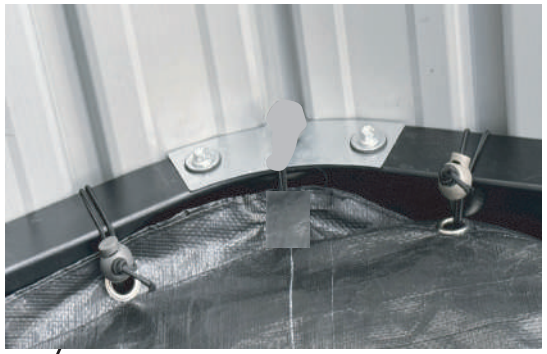

Note: Hang the middle hole of B2 at the highest point and tie it tightly to B1.

Note:Bind with Velcro

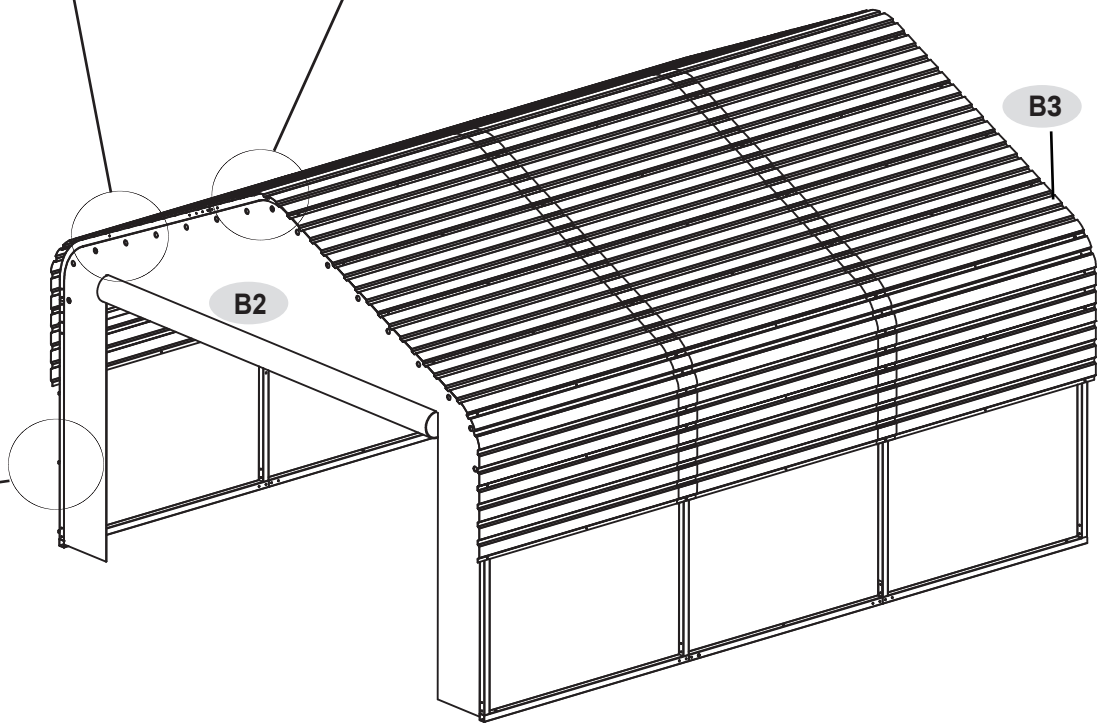

Installation steps

B1		X8
B4	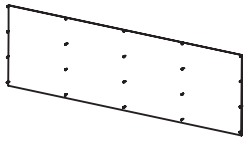	X2

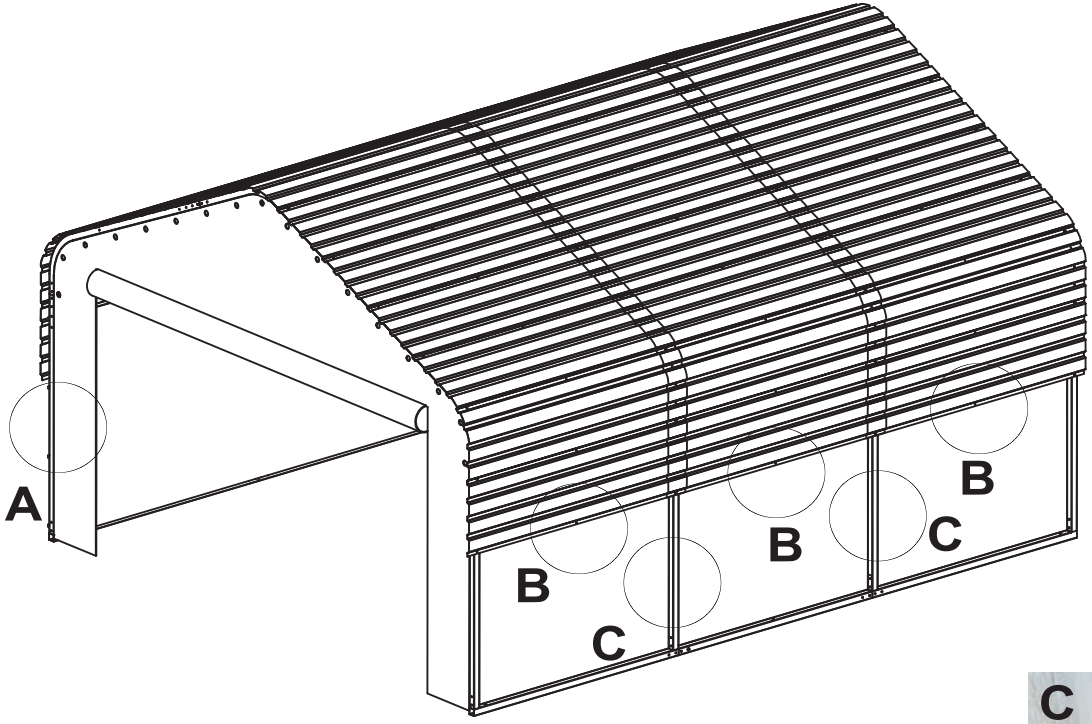

A

Note:Bind with Velcro