ASSEMBLY INSTRUCTIONS

QUEEN MURPHY BED WITH DRAWER

TYPE 1

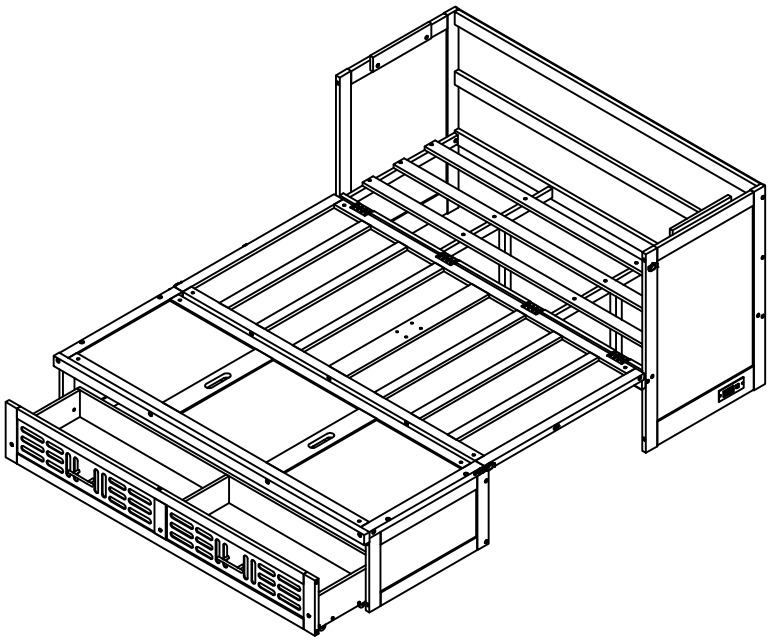

TYPE 2

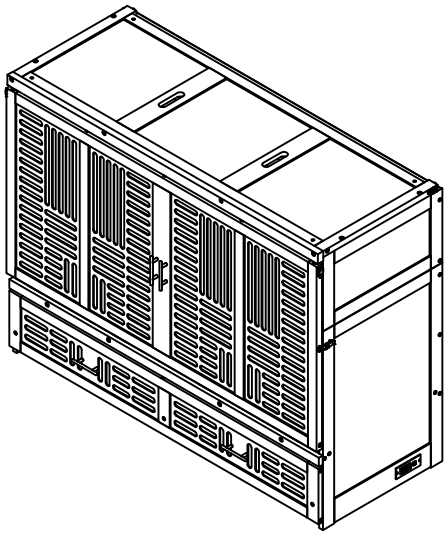

SA33872

Detail View

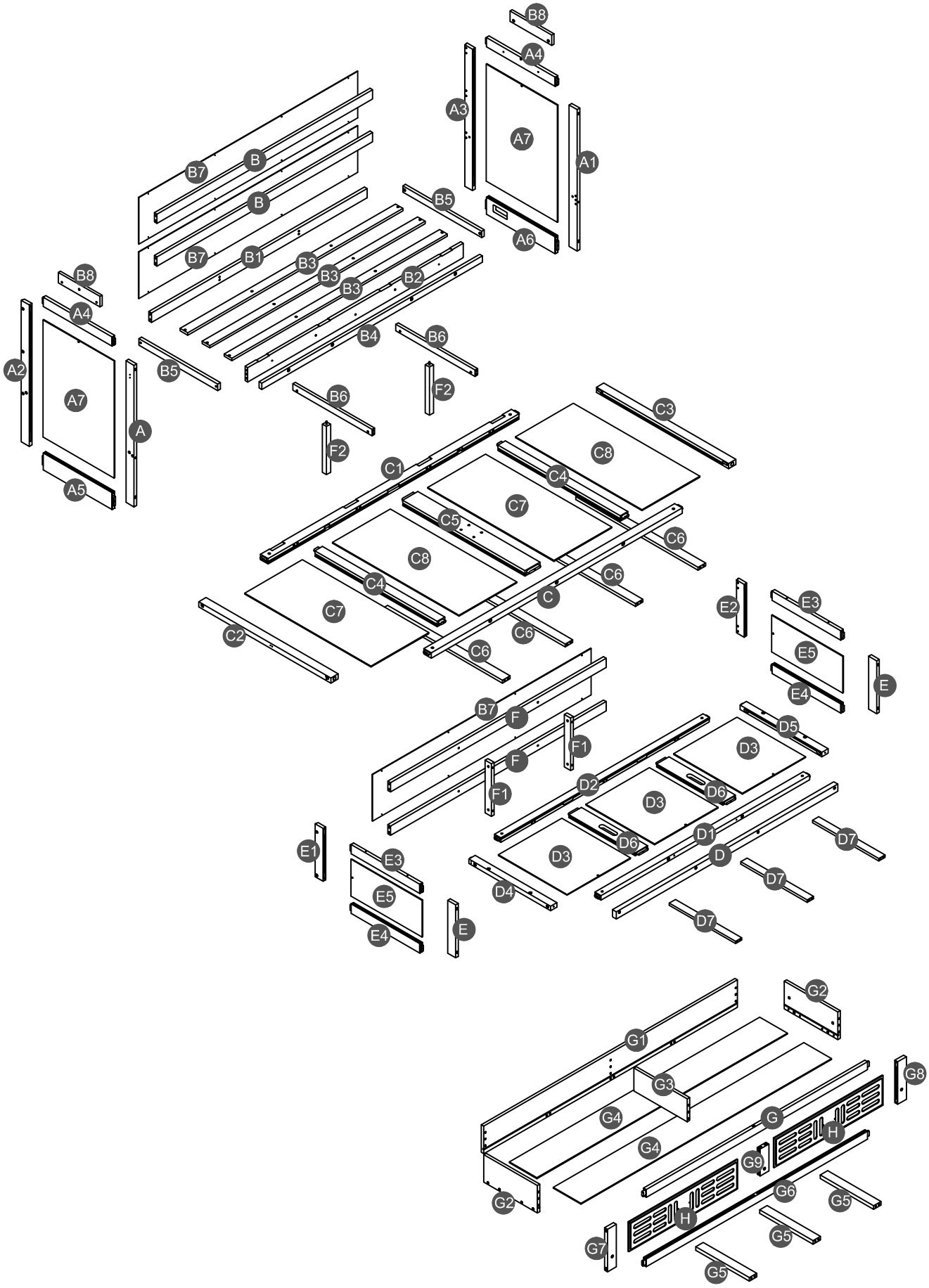
B8
A4
A3
A7
A1
B7
B
B
B5
A6
B7
B1
B3
B3
B3
B2
B8
A4
B4
B6
A2
B5
A7
A
B6
F2
F2
A5
C3
C8
C1
C4
C7
C5
C6
C8
C6
C4
C
C7
C2
C6
C6
E2
E3
E5
E
E4
B7
F
D5
F1
D3
F
D2
D6
F1
D3
D1
D7
E1
E3
D6
D3
D
D7
E5
D4
E4
E
D7
G2
G1
G8
G3
G4
G
H
G4
G9
G6
G5
G2
H
G5
G7
G5

Part list (Box 1 - SA33872 (1-2))

A 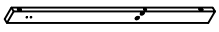 Vertical bar HB (left front) -1pc	**A1** 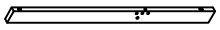 Vertical bar HB (right front) -1pc	**A2** 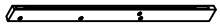 Vertical bar HB (left back) -1pc
A3  Vertical bar HB (right back) -1pc	**A4** 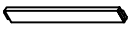 Upper horizontal bar HB- 2pcs	**A5**  Lower horizontal bar HB (left) -1pc
A6  Lower horizontal bar HB (right) -1pc	**B** 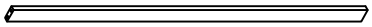 Upper horizontal bar HB - 2pcs	**B1** 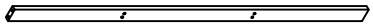 Lower horizontal bar HB -1pc
B2 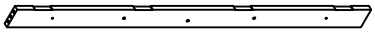 Horizontal bar HB (front) - 1pc	**B3**  Slat - 3pcs	**B4** Support HB (front) - 1pc
B5 Horizontal bar HB (left/right) - 2pcs	**B6** Lower support slat - 2pcs	**B7** 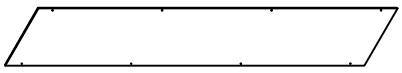 Back panel HB/FB - 3pcs
B8 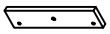 Support HB - 2pcs	**C**  Horizontal bar (front) - 1pc	**C1**  Horizontal bar (back) - 1pc
D 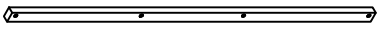 Support FB (front) - 1pc	**D1** 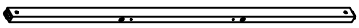 Horizontal bar FB (front) - 1pc	**D2**  Horizontal bar FB (back) - 1pc
D4 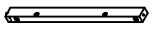 Horizontal bar FB (left) - 1pc	**D5**  Horizontal bar FB (right) - 1pc	**D6**  Divider horizontal bar FB - 2pcs
E  Vertical bar FB (left/right) - 2pcs	**E1**  Vertical bar FB (left back) -1pc	**E2**  Vertical bar FB (right back) -1pc
E3 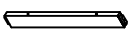 Upper horizontal bar FB- 2pcs	**E4**  Lower horizontal bar FB - 2pcs	**E5** 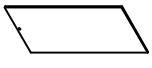 Side panel FB - 2pcs

F 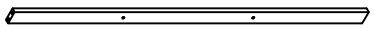 Upper horizontal bar FB - 2pcs	**F1**  Vertical bar support FB -2pcs	**G**  Upper horizontal bar front drawer - 1pc
G1 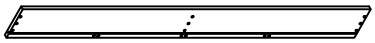 Back drawer panel - 1pc	**G2** 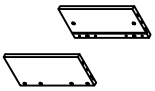 Left / right drawer panel - 2pcs	**G3**  Divider drawer panel - 1pc
G4 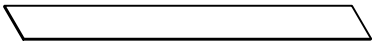 Drawer bottom - 2pcs	**G5**  Support drawer - 3pcs	**G6**  Lower horizontal bar front drawer - 1pc
G7  Vertical bar front drawer (left)- 1pc	**G8**  Vertical bar front drawer (right)- 1pc	**G9**  Mid vertical bar front drawer - 1pc
H  Front drawer panel - 2pcs		

Part list & Hardware list (Box 2 - SA33872 (2-2))

A7 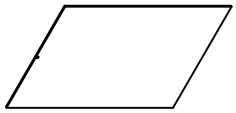 Side panel HB - 2pcs	**C2** 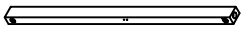 Horizontal bar (left) - 1pc	**C3** 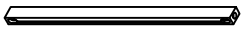 Horizontal bar (right) - 1pc
C4 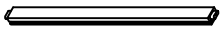 Horizontal bar - 2pcs	**C5** 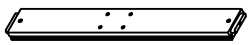 Mid horizontal bar support - 1pc	**C6** Horizontal bar support - 4pcs
C7  Side panel (left) - 2pcs	**C8** 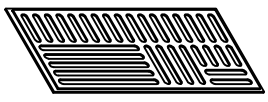 Side panel (right) - 2pcs	**D3** 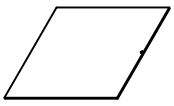 Side panel FB - 3pcs
D7 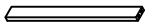 Horizontal bar support - 3pcs	**F2**  Leg support - 2pcs	

Hardware List (Box 2 - SA33872 (2-2))

1  Ø10*20mm Wood dowel (6pcs)	**2** 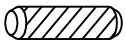 Ø8*30mm Wood dowel (75pcs)	**3** 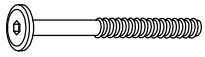 (Ø15)1/4"*80mm Hex-Head bolts (10pcs)
4  (Ø12)1/4"*60mm Hex-Head bolts (24pcs)	**5**  (Ø12)1/4"*35mm Hex-Head bolts (4pcs)	**6**  (Ø12)1/4"*65mm Hex-Head bolts (32pcs)
7  (Ø12)1/4"*40mm Hex-Head bolts (8pcs)	**8**  (Ø12)1/4"*30mm Hex-Head bolts (6pcs)	**9**  1/4"*15 (9.5mm) Horizontal-Hole bolts(34pcs)
10  Ø4*30mm Wood screws (20pcs)	**11**  Ø3.5*15mm Wood screws (34pcs)	**12** 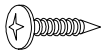 Ø3*12mm Wood screws (24pcs)
13  Ø3.5*19mm Wood screws (36pcs)	**14** 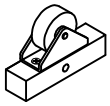 100*52*20 mm Wheels (4pcs)	**15**  45*20*33 mm Wheels (2pcs)
16 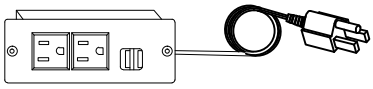 125*47*43mm Power outlet (1pc)	**17** 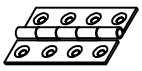 76*42*2mm Hinger (4pcs)	**18**  60*28*15mm Metal bracket (4sets)
19 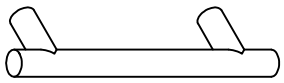 125*33*10mm Handle (4pcs)	**20**  5/32"*10mm Ph zinc(Knob) (4pcs)	**21**  (1/4")4.5*58mm Allen key (1pc)
22 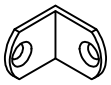 21*17*17*2mm Metal bracket (6pcs)	**23**  Ø9*32mm Plastic anchor (2pcs)	**24** 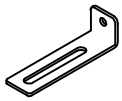 58*16*16*(1.5mm) Metal bracket (2pcs)
25 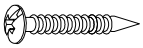 Ø4*38mm Wood screws (2pcs)	**26** 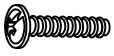 5/32"*15mm Ph zinc(Knob) (4pcs)	

OPTIONAL TOOLS FOR ASSEMBLY (NOT INCLUDED)

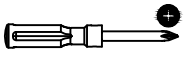
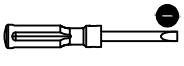

Electric Screwdriver

PLEASE BE CAREFUL DO NOT DAMAGE THE HOLE POSITION WHEN YOU USE POWER TOOLS !

STEP 1:

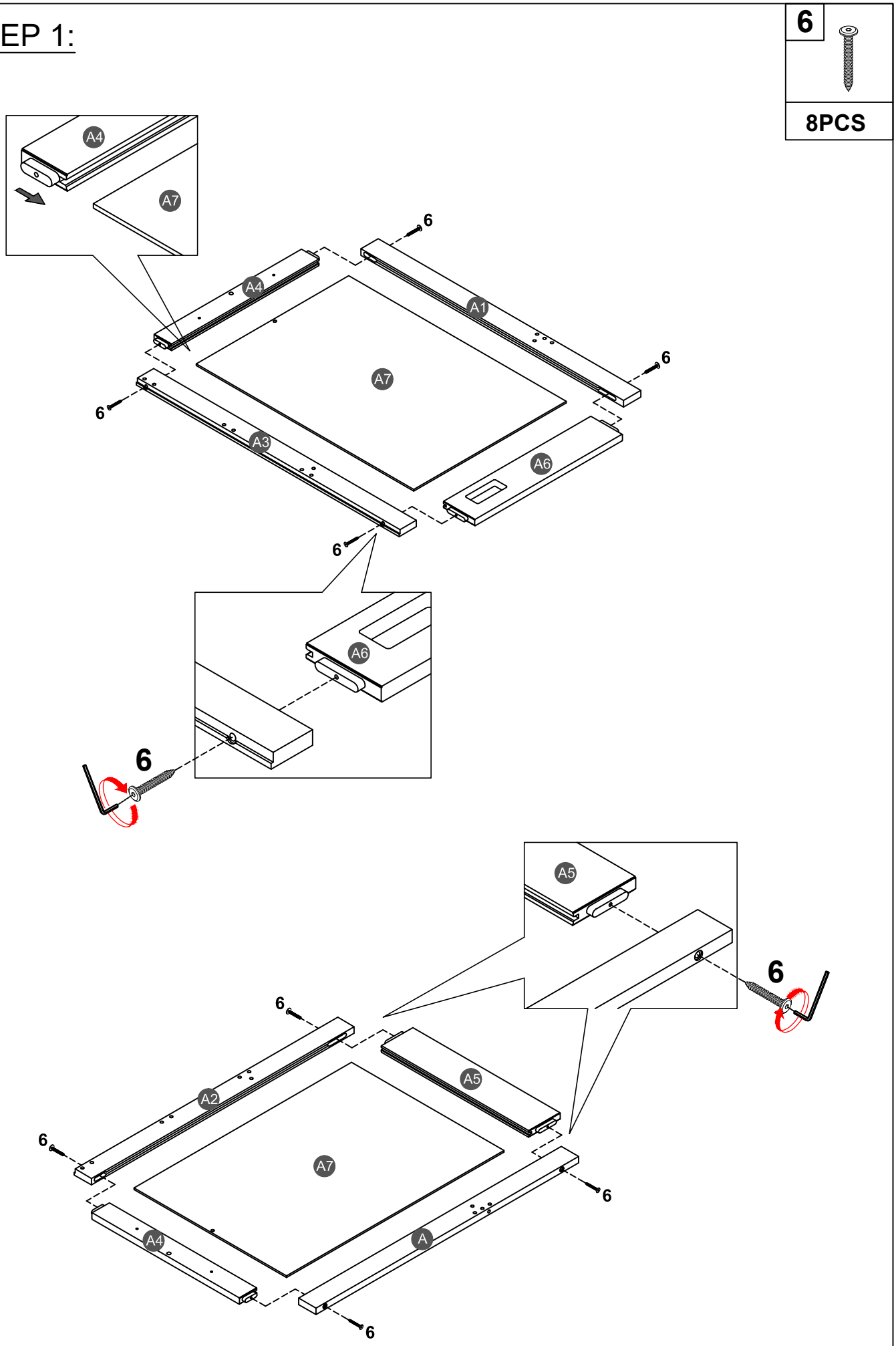

STEP 2:

5
4PCS

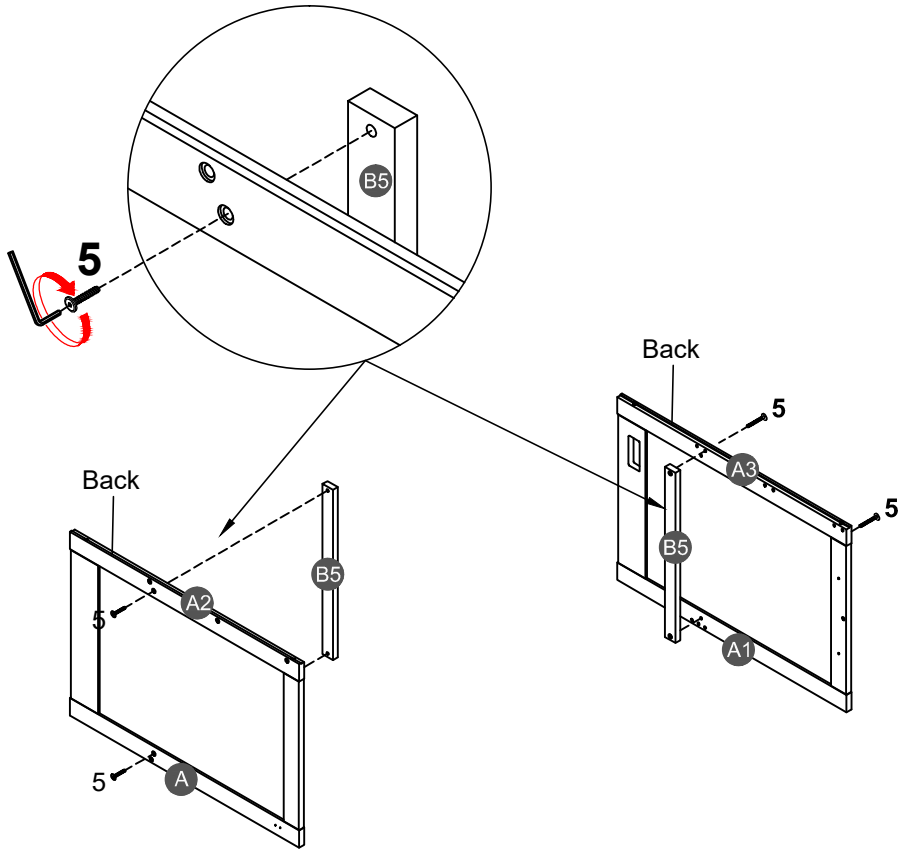

STEP 3:

2	4	9
2PCS	2PCS	2PCS

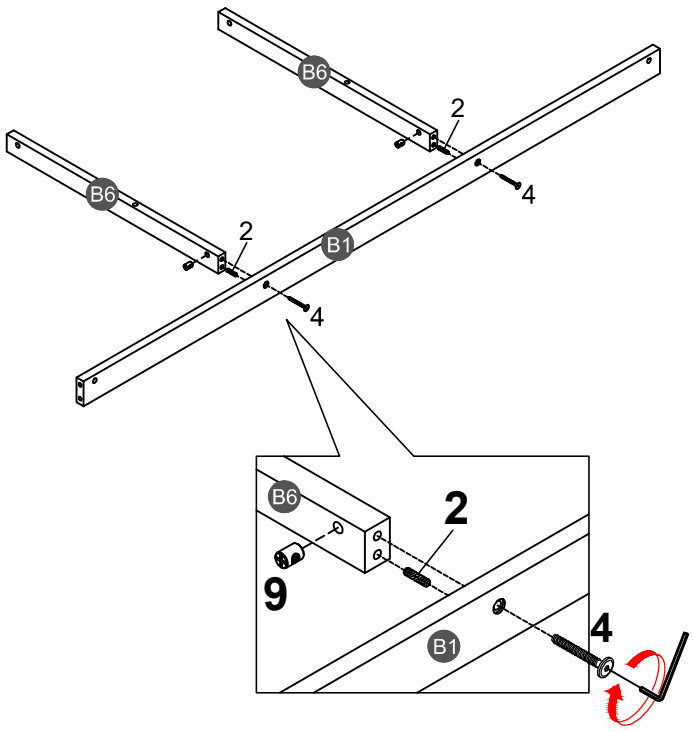

STEP 4:

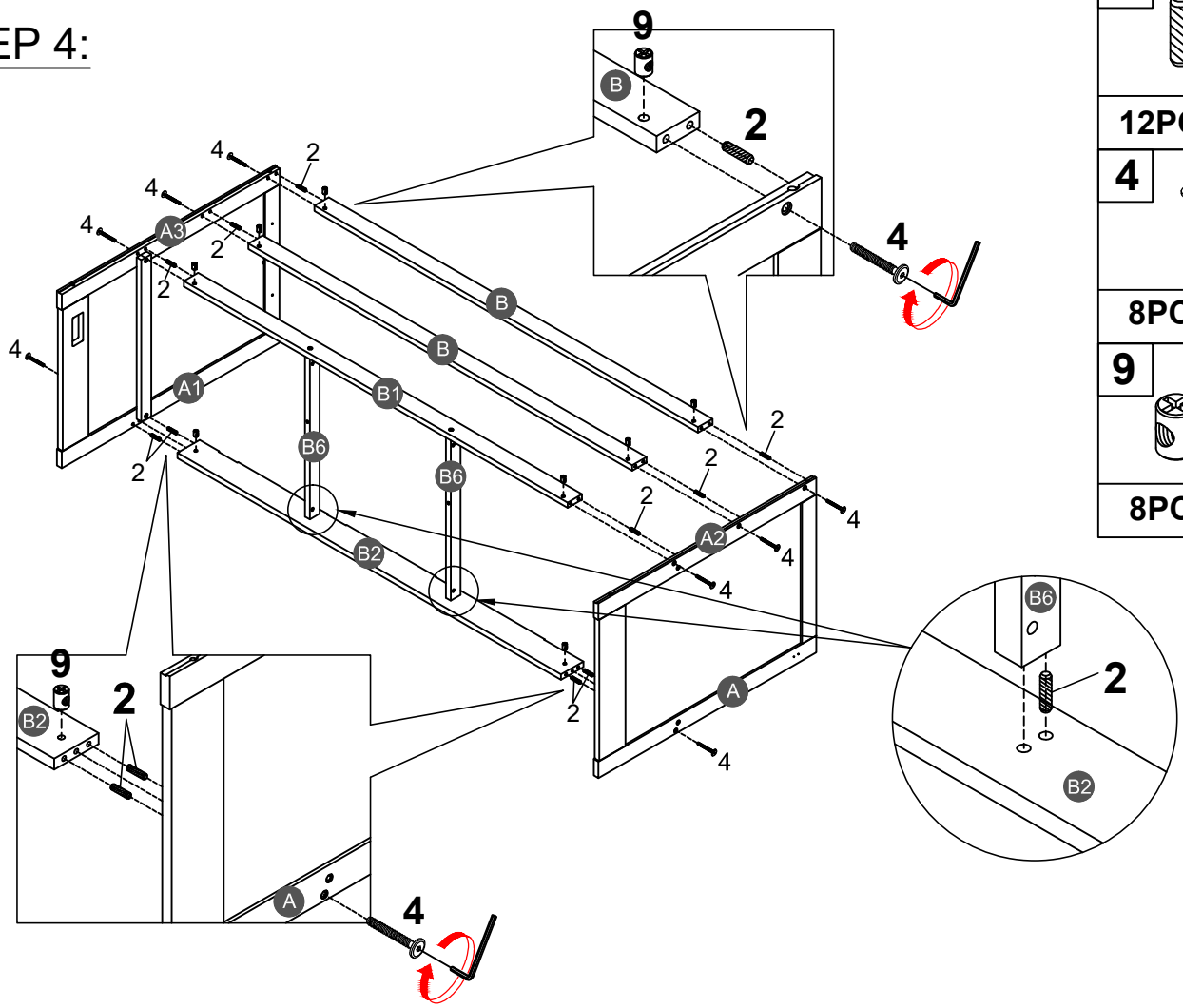

2	12PCS
4	8PCS
9	8PCS

STEP 5:

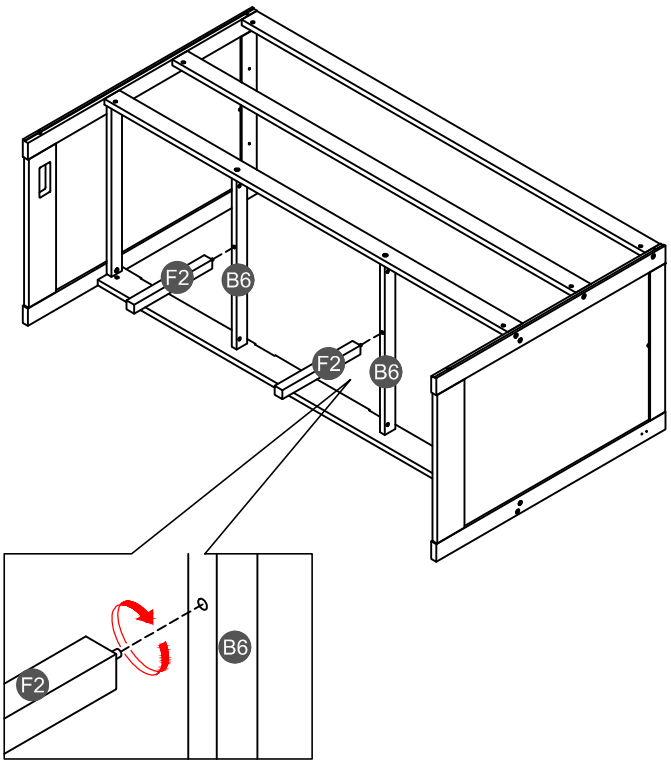

STEP 6:

1	8
2PCS	4PCS

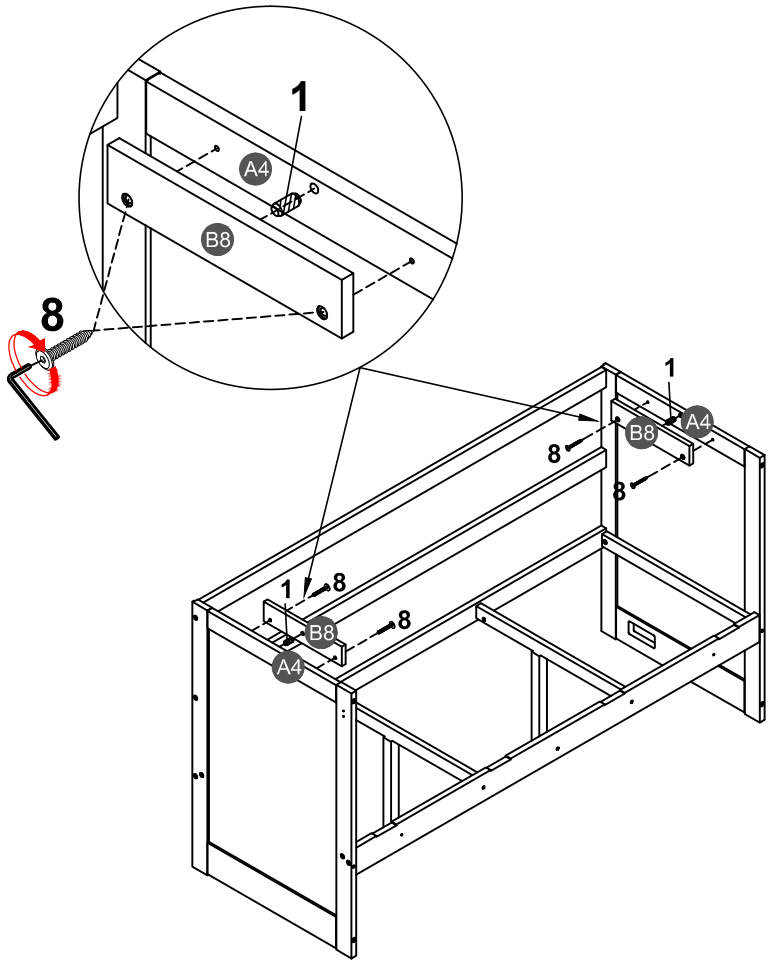

STEP 7:

2	8	3	9
3PCS	2PCS	2PCS	2PCS

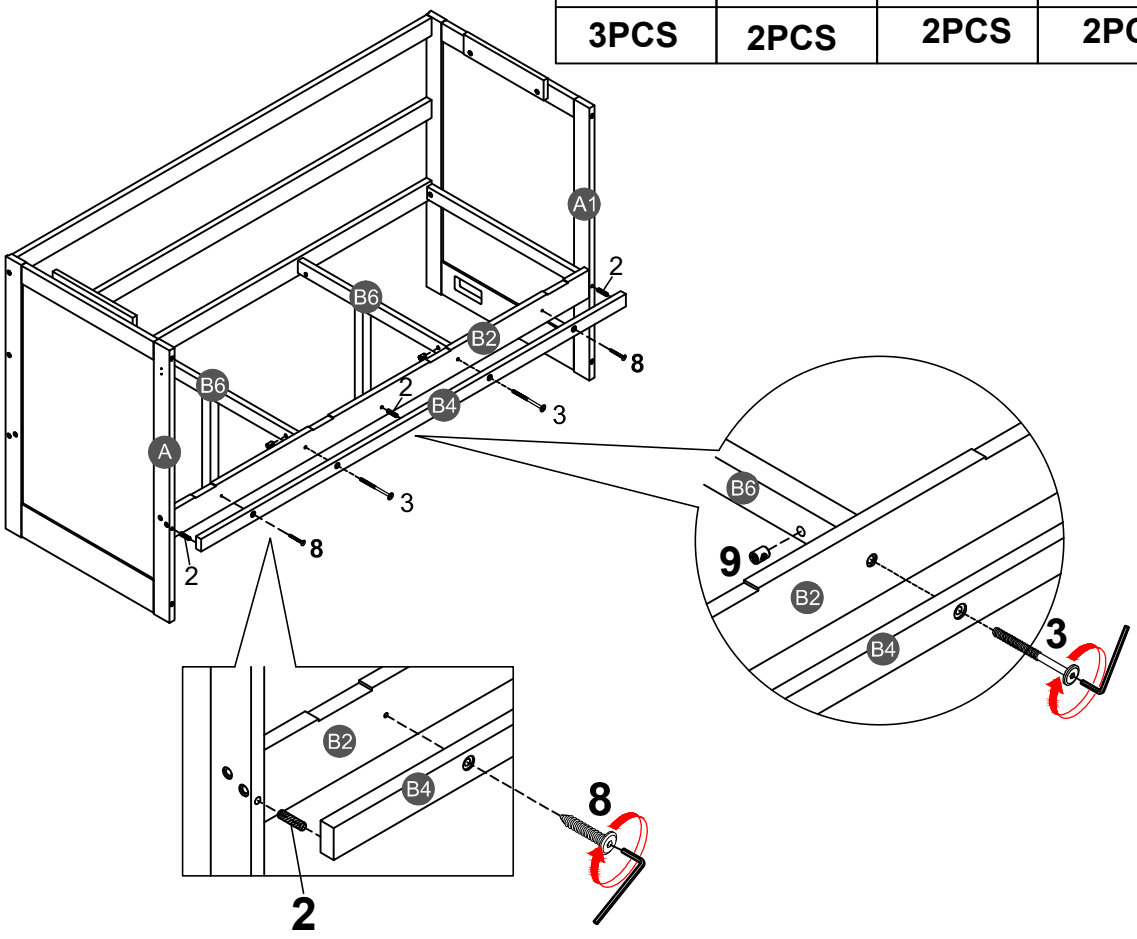

STEP 8:

10

12PCS

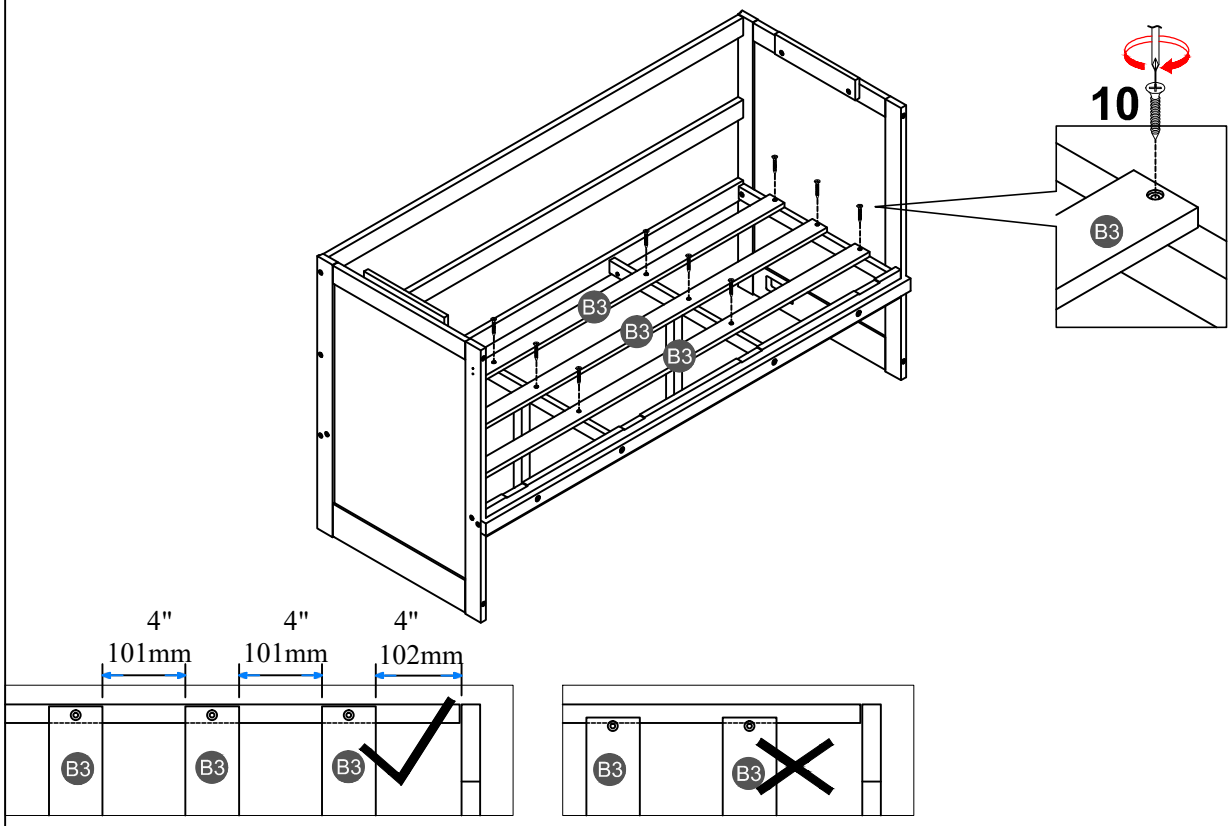

NOTE: Please make sure the bed slats close to the side rail before locking the screws to avoid breakage. This step is required for both the left and right sides. Moreover, please do not lock the screws of the bed slats at the outermost edge to avoid damaging.

STEP 9:

12

16PCS

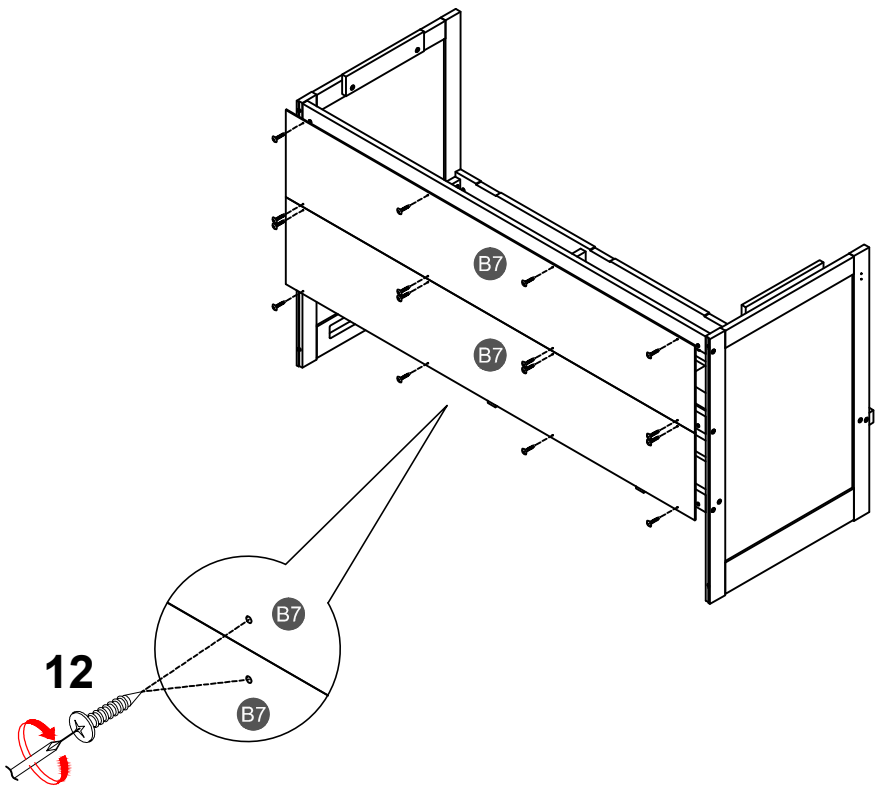

STEP 10:

11	16	18
6PCS	1PC	2PCS

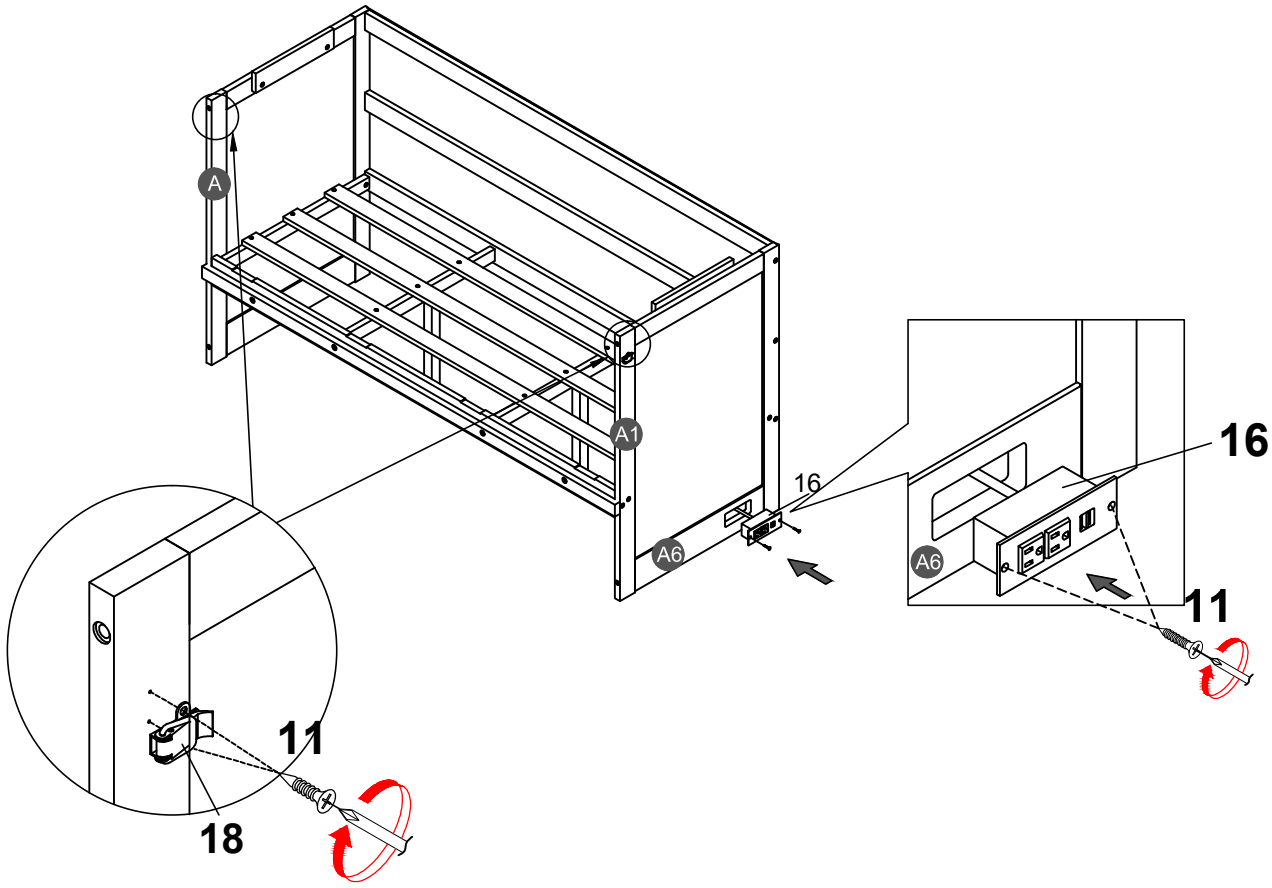

STEP 11:

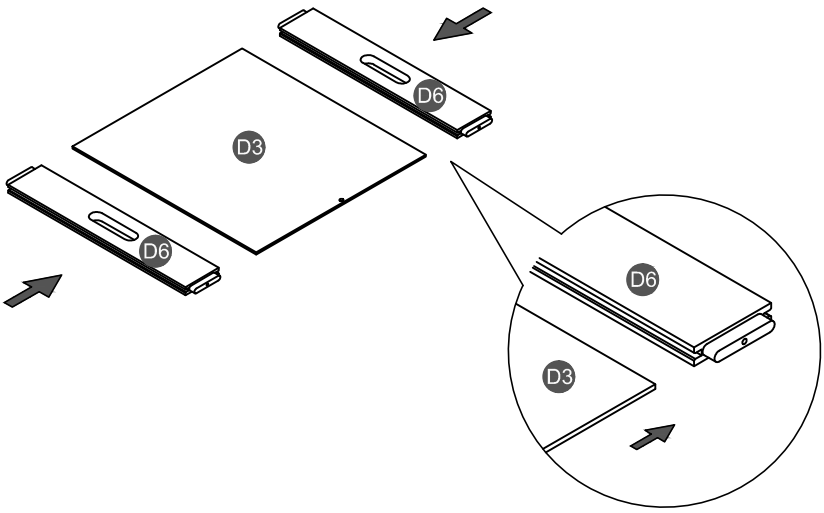

STEP 12:

2	6
12PCS	4PCS

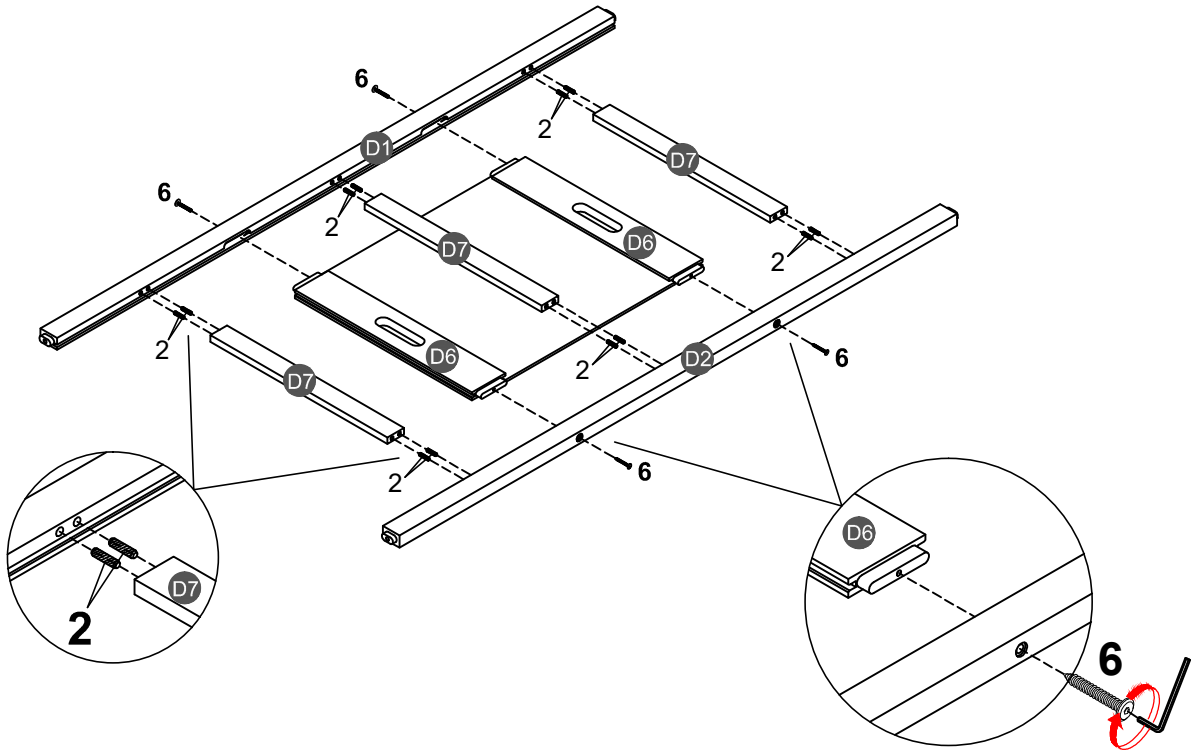

STEP 13:

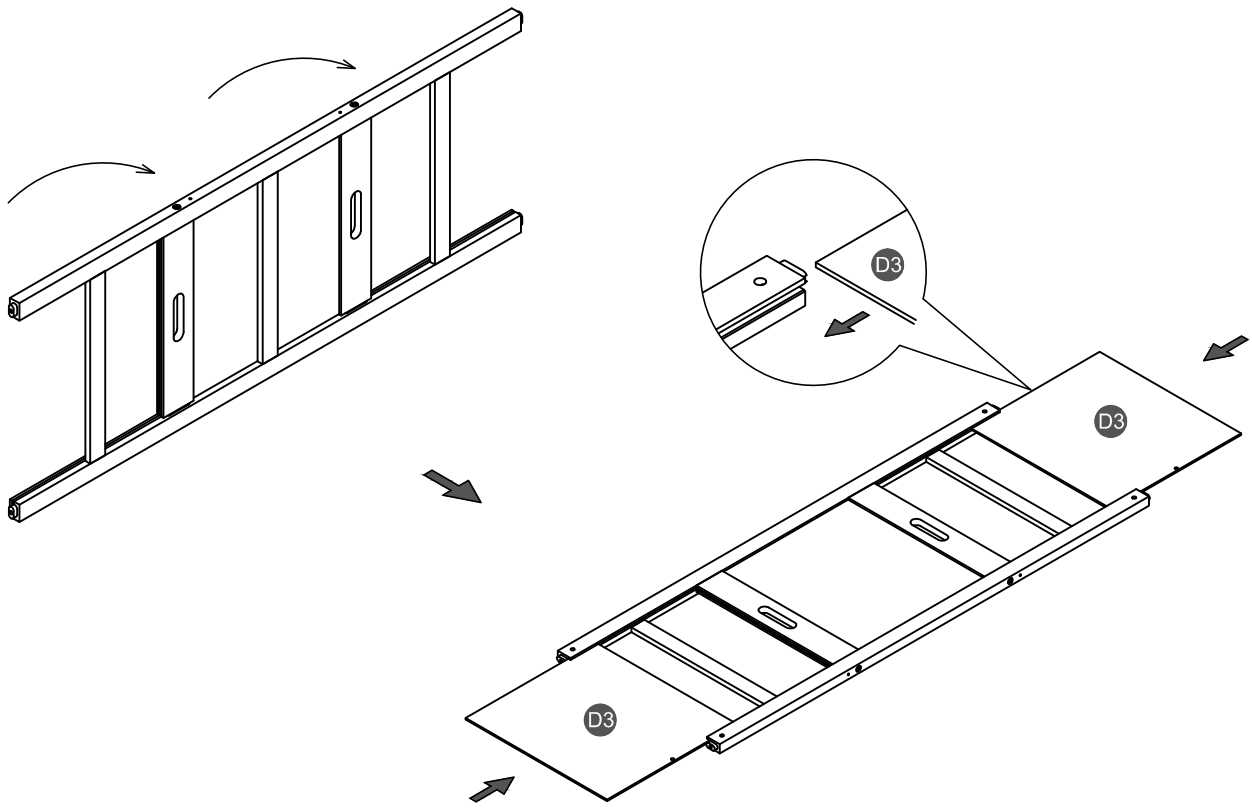

STEP 14:

3	9
4PCS	4PCS

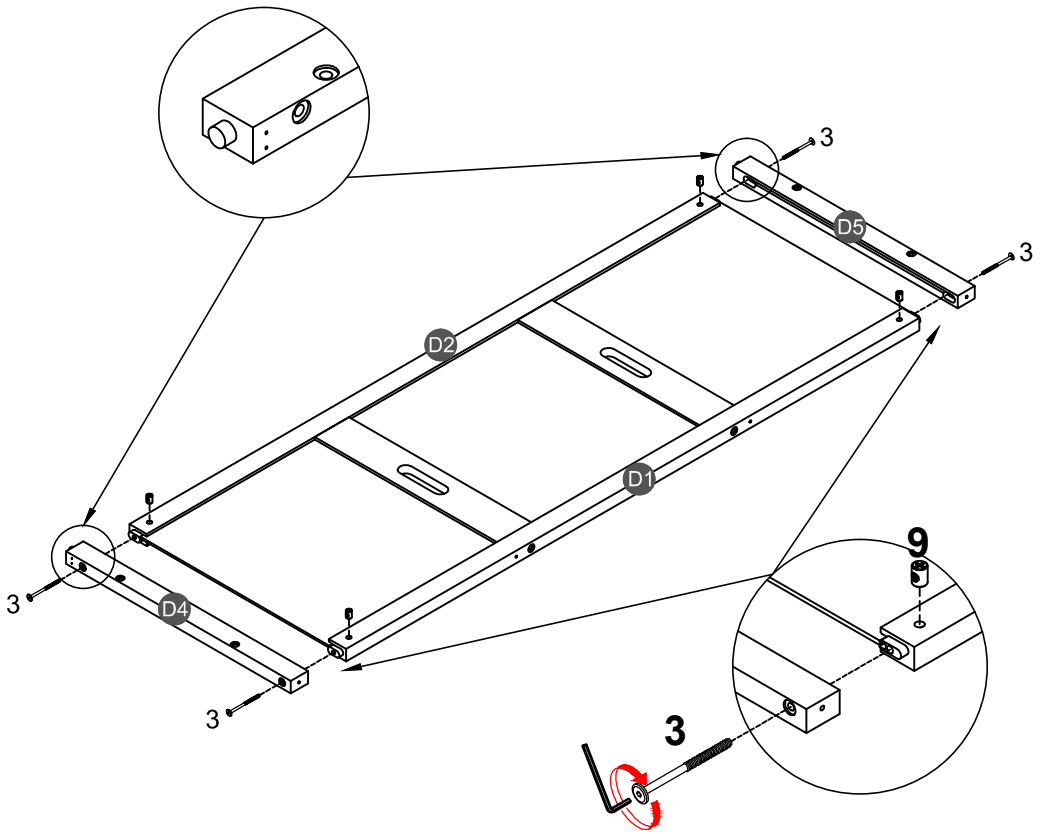

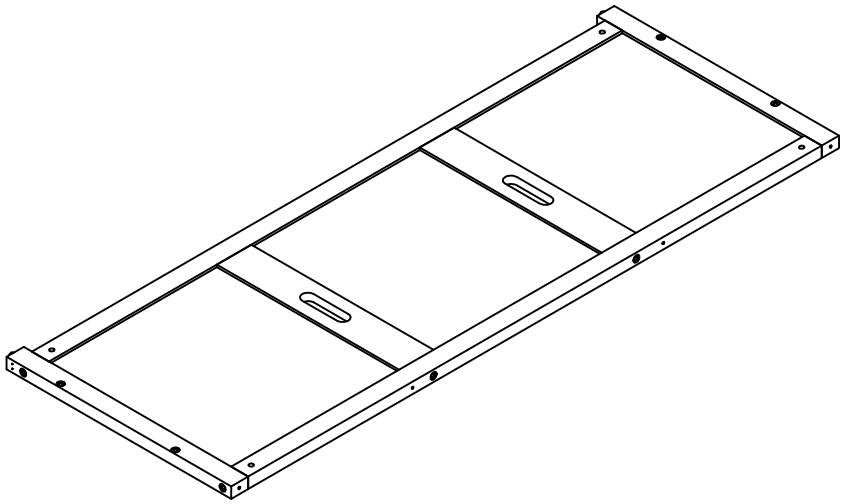

STEP 15:

6
8PCS

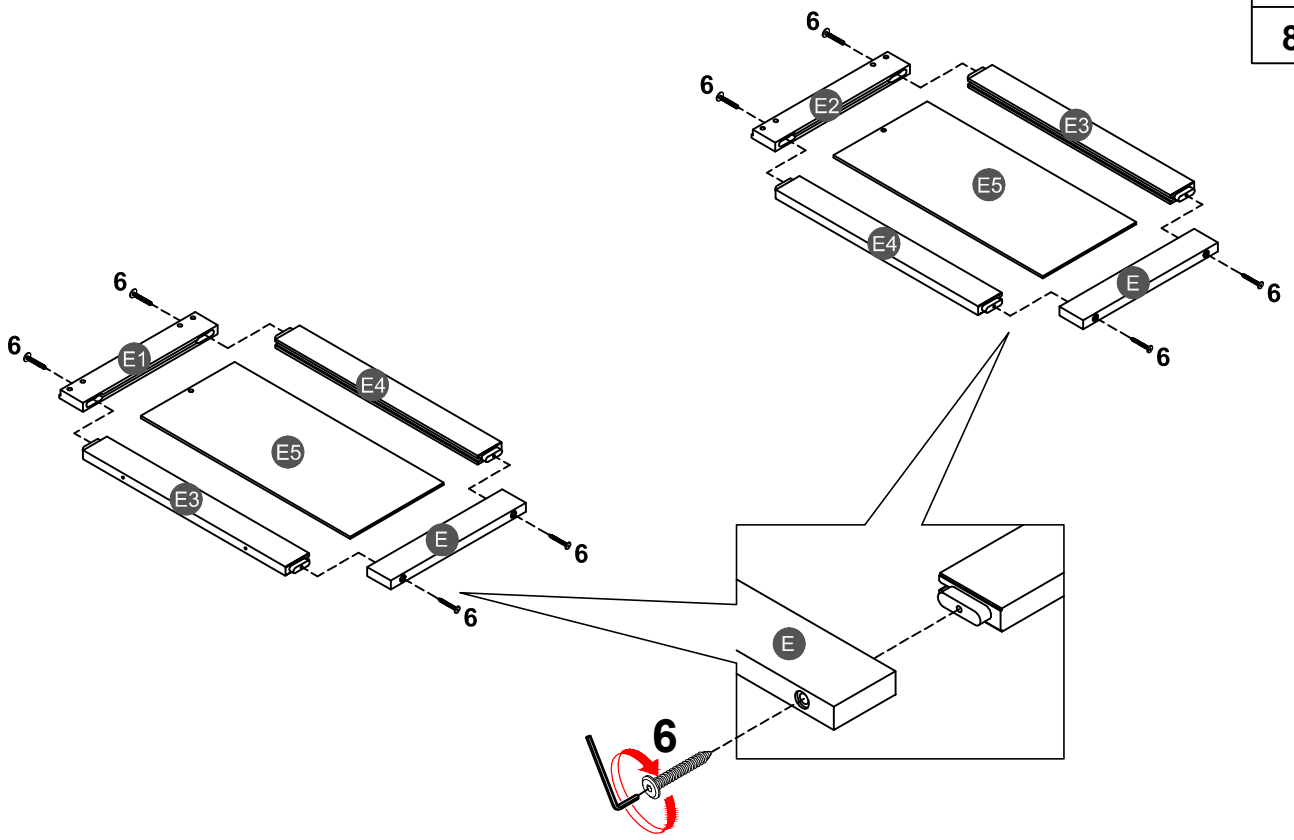

STEP 16:

2	4	9
4PCS	4PCS	4PCS

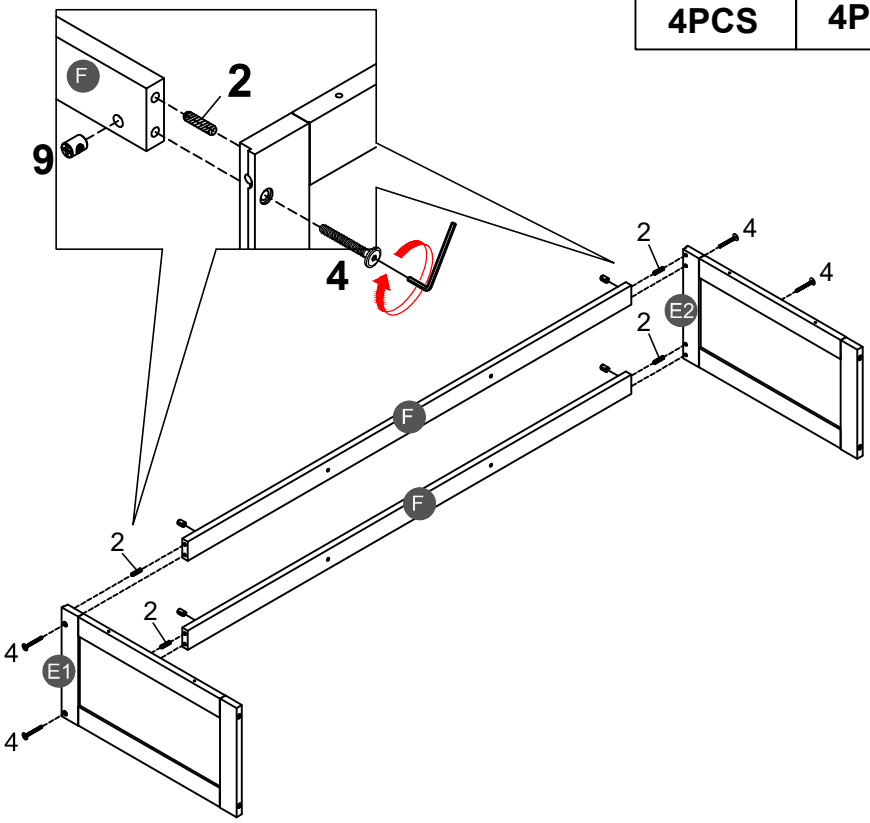

STEP 17:

4	9
4PCS	4PCS

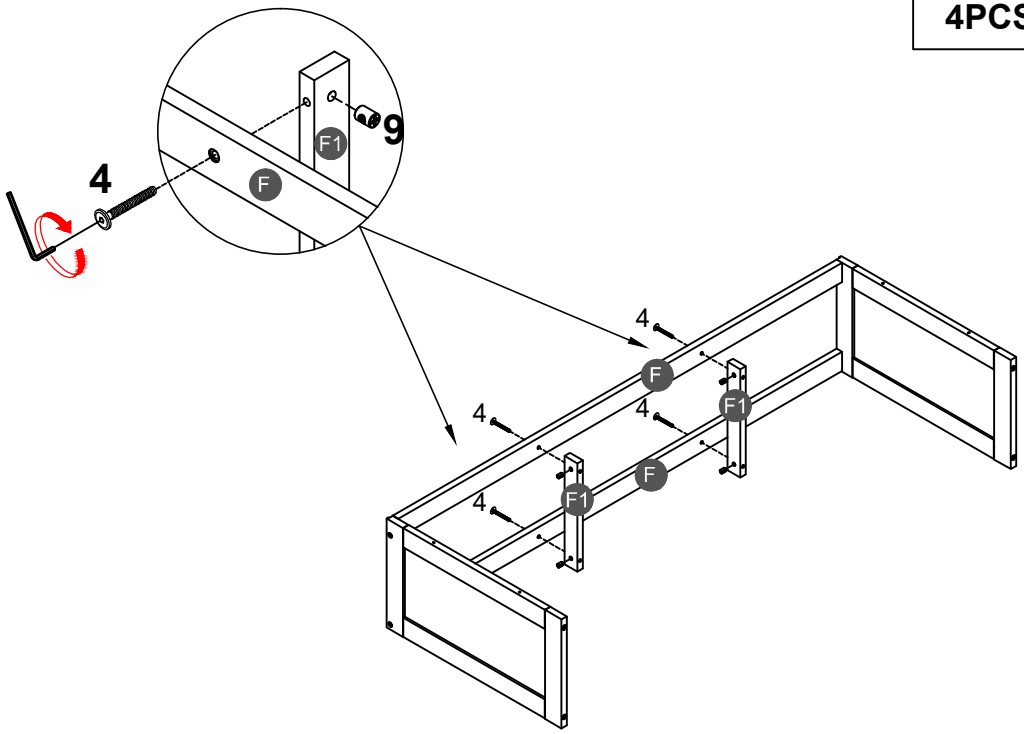

STEP 18:

7
4PCS

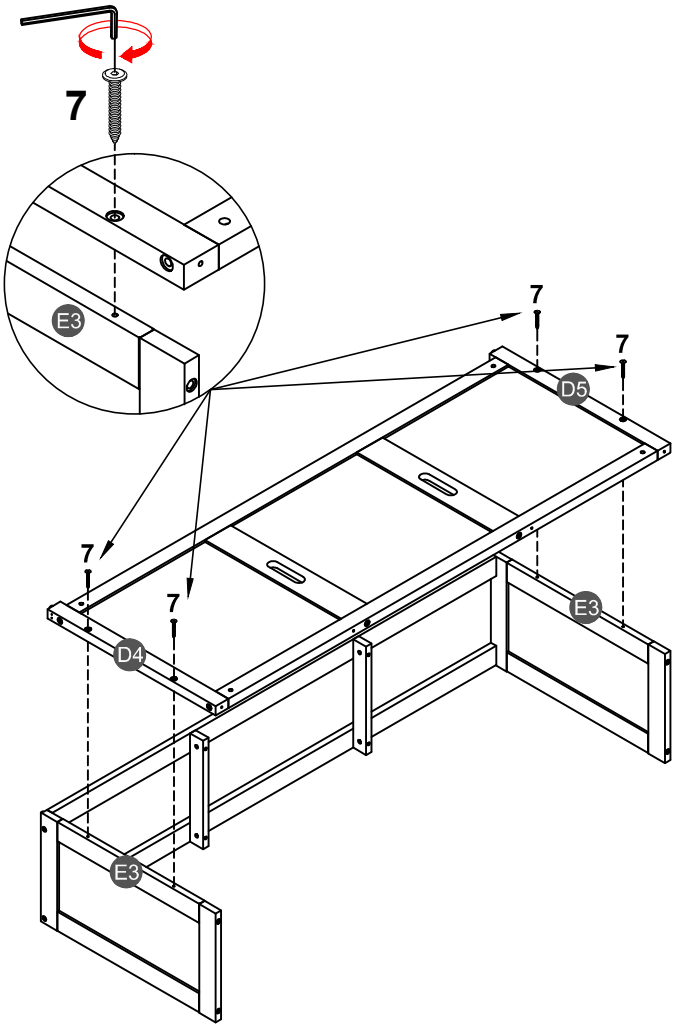

STEP 19:

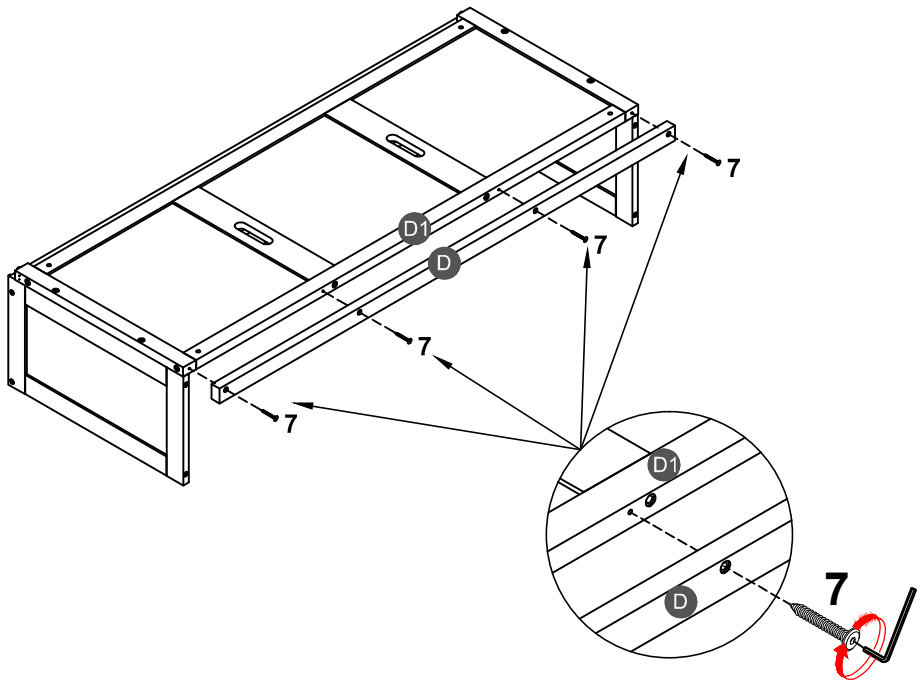

STEP 20:

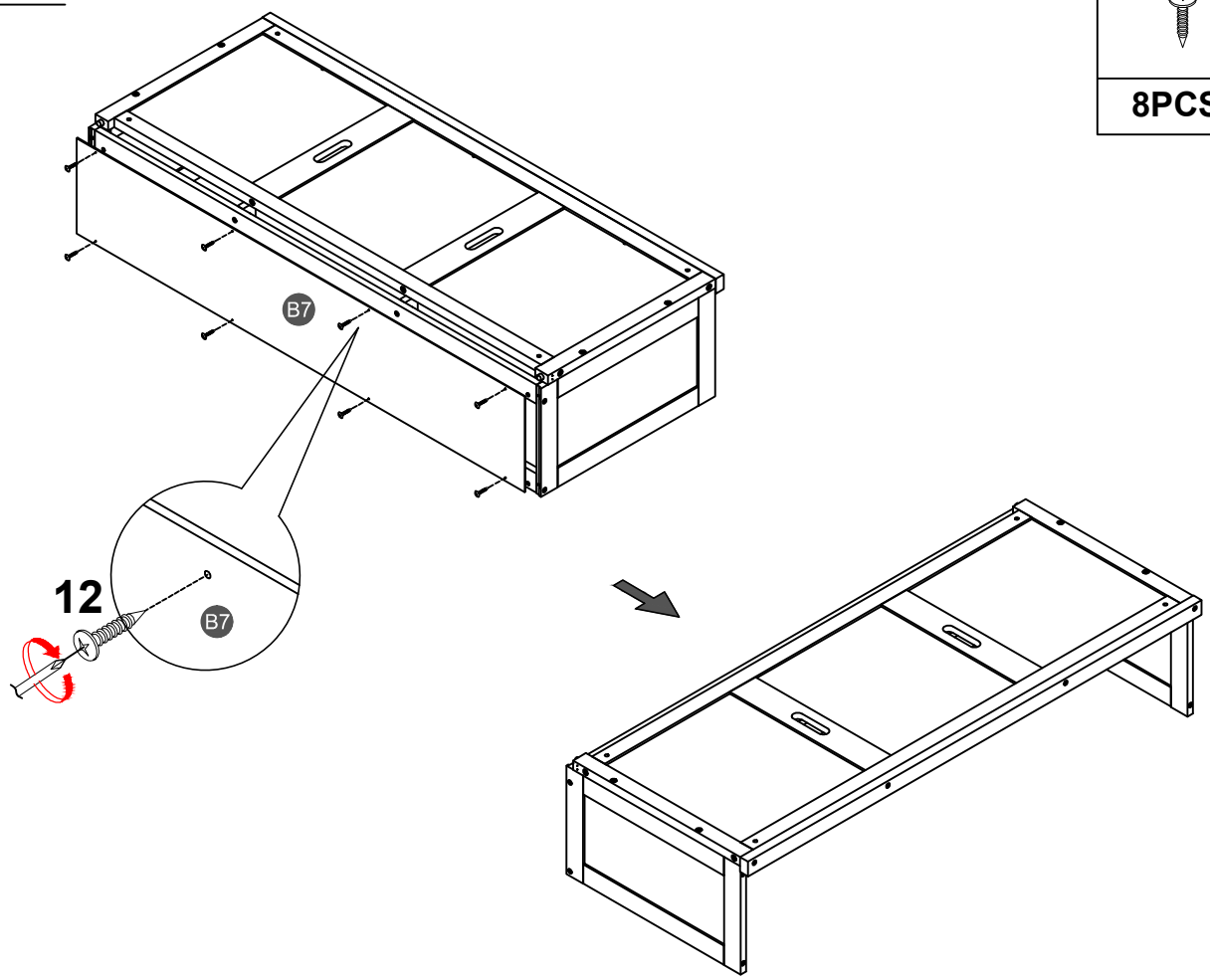

STEP 21:

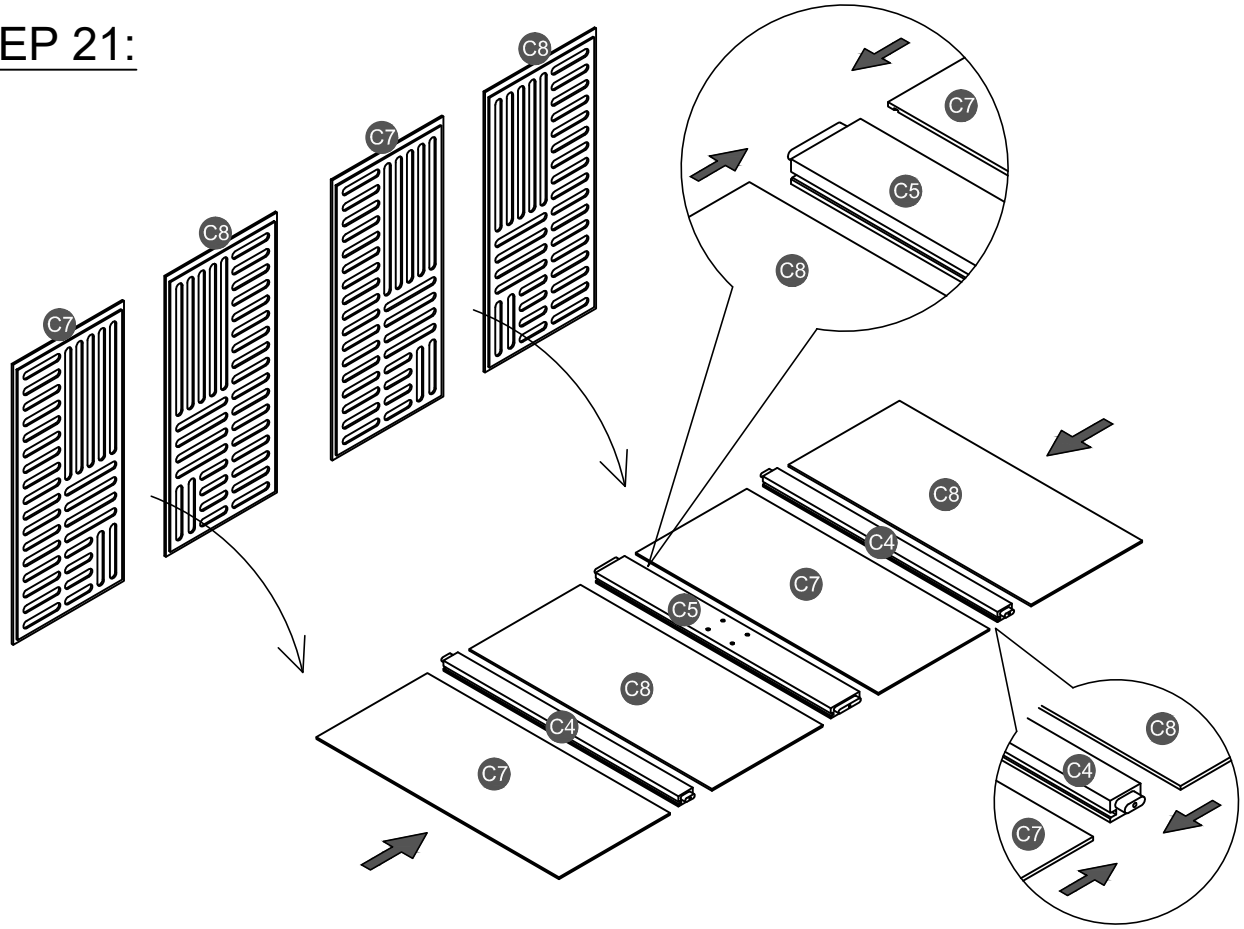

STEP 22:

2	6
16PCS	6PCS

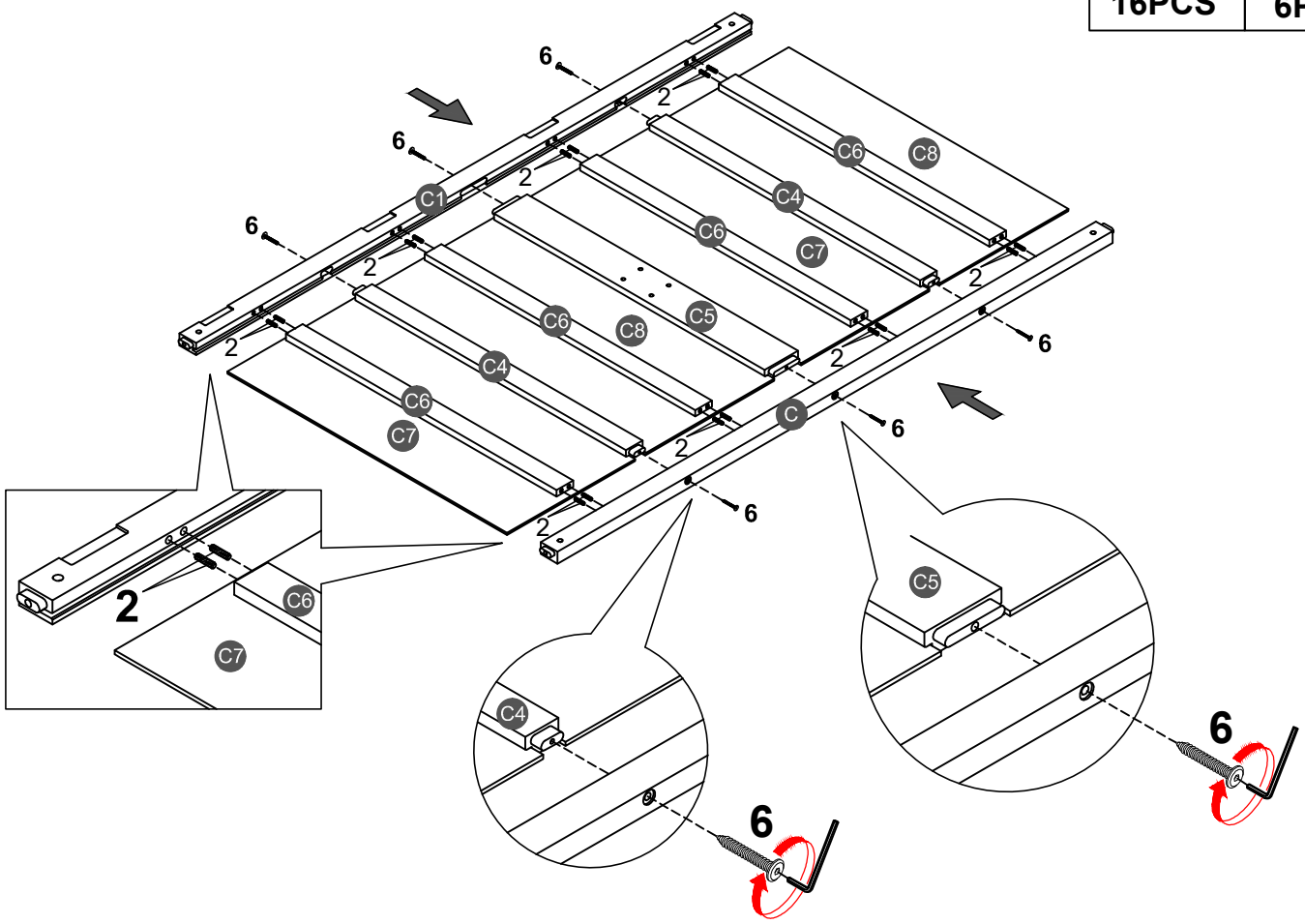

STEP 23:

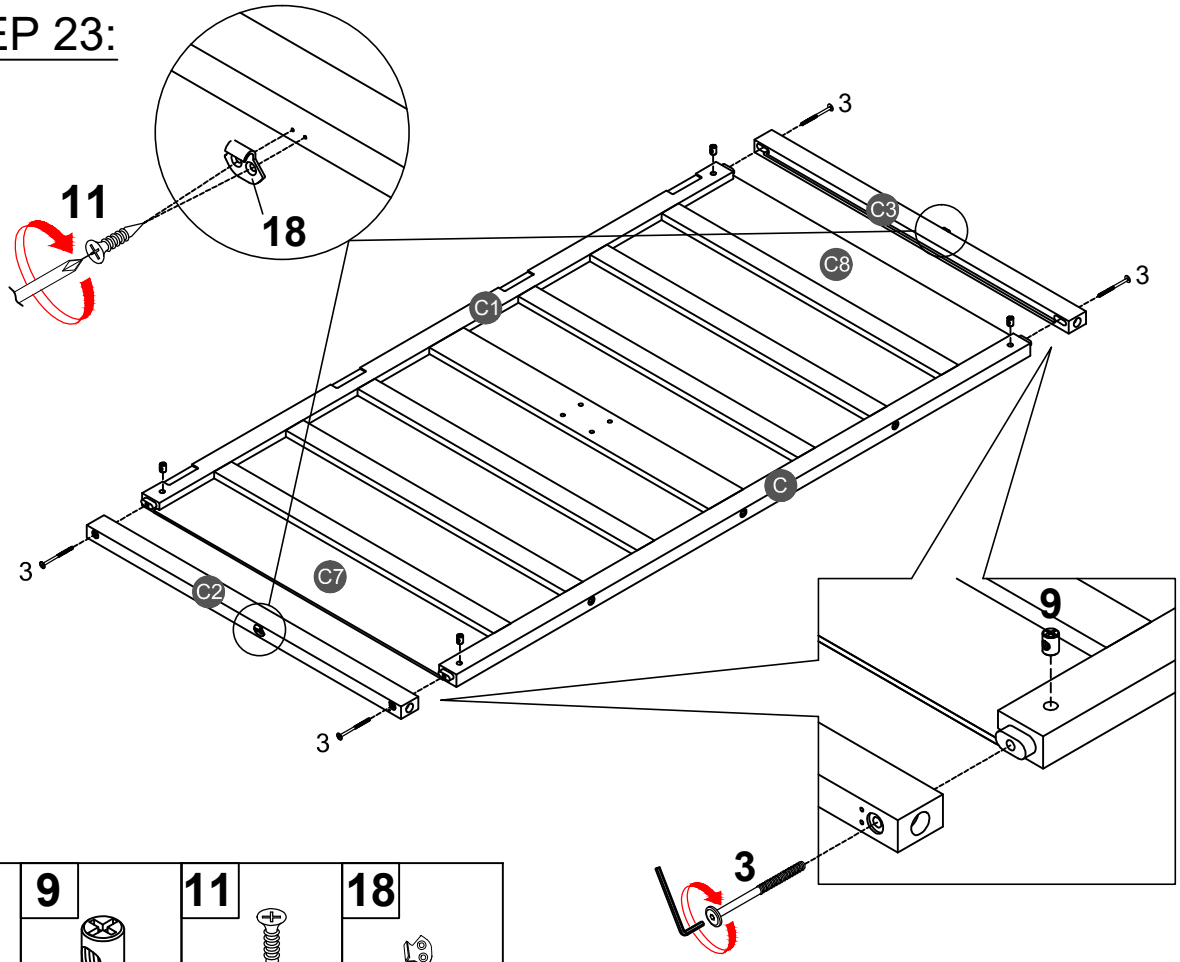

3	9	11	18
4PCS	4PCS	4PCS	2PCS

STEP 24:

19	26
2PCS	4PCS

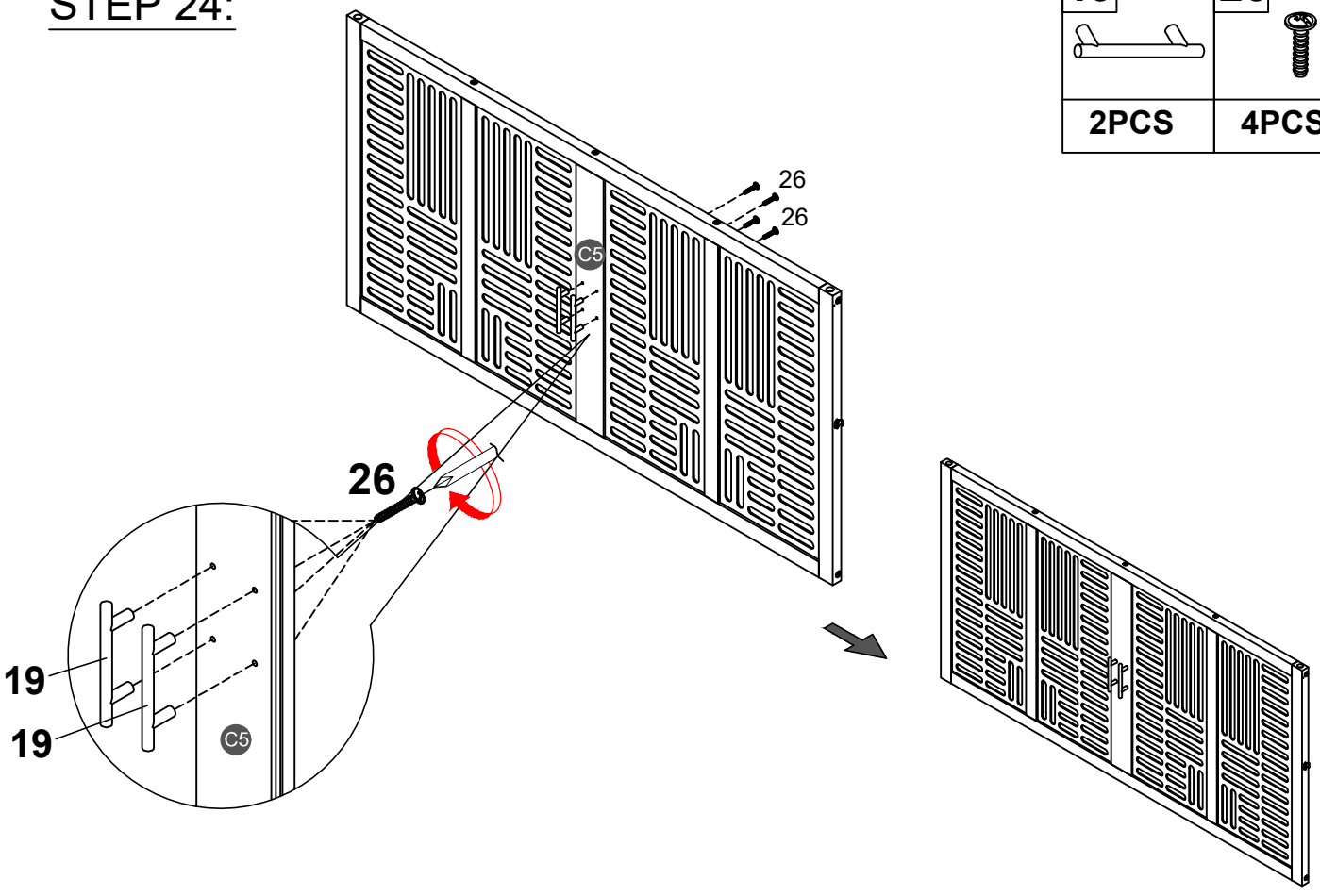

STEP 25:

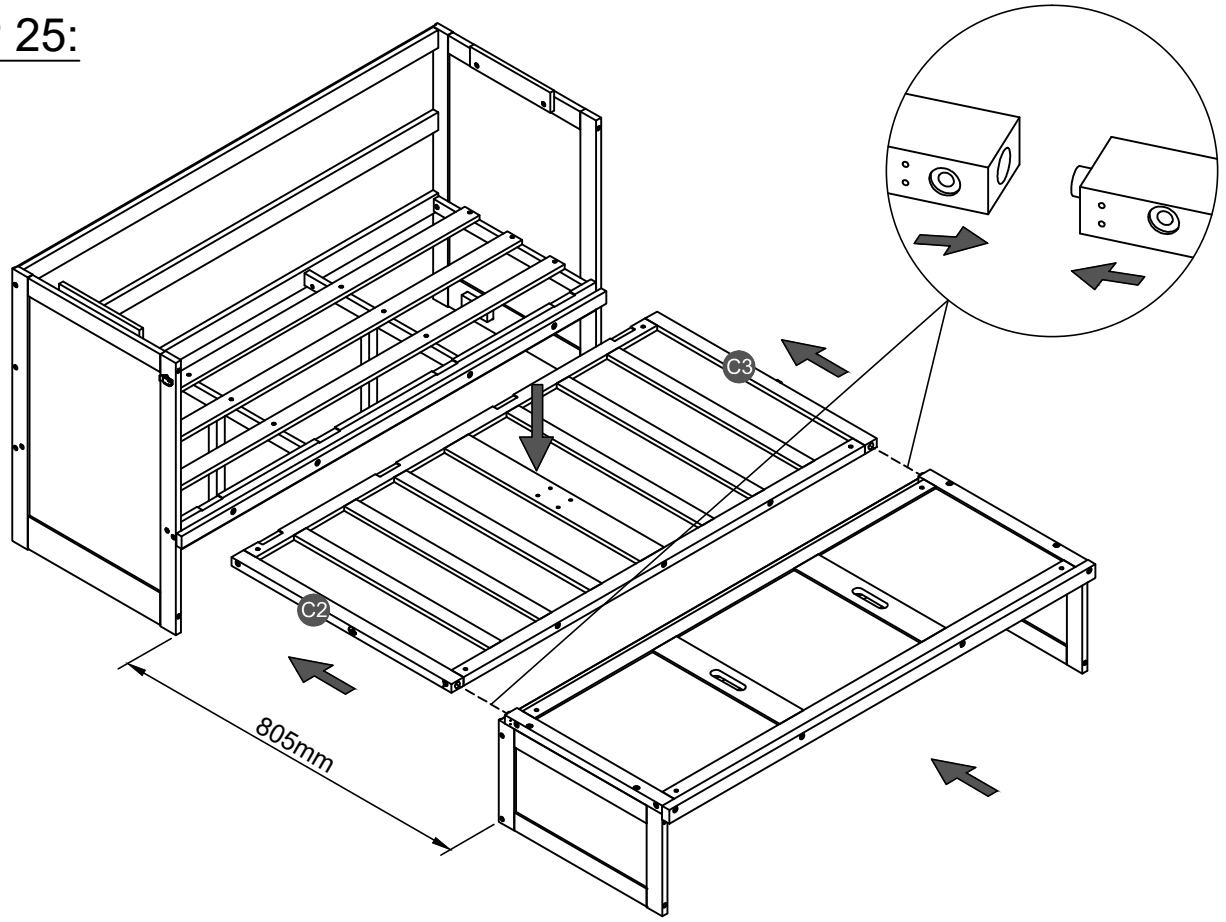

STEP 26:

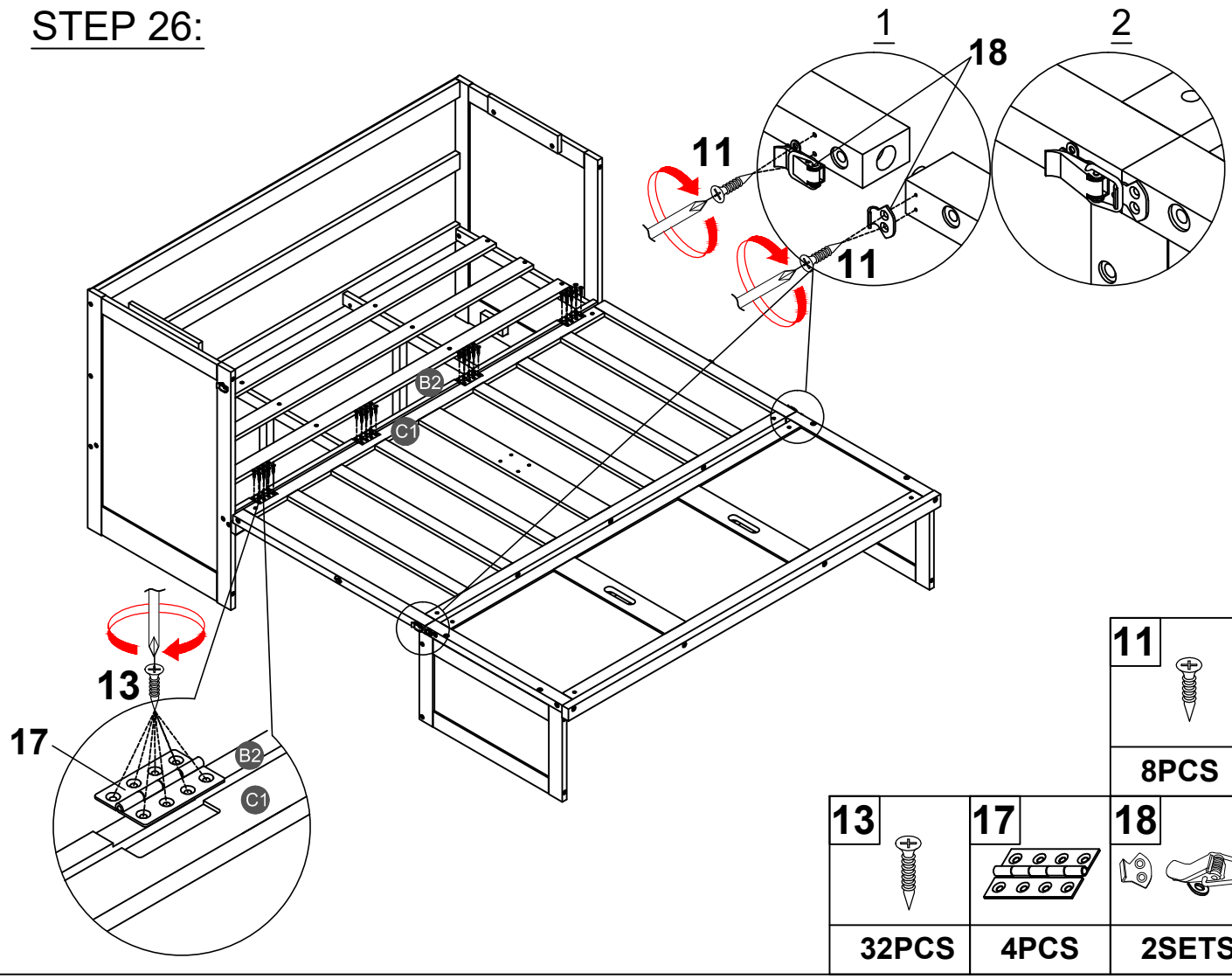

11	13	17	18
8PCS	32PCS	4PCS	2SETS

STEP 27:

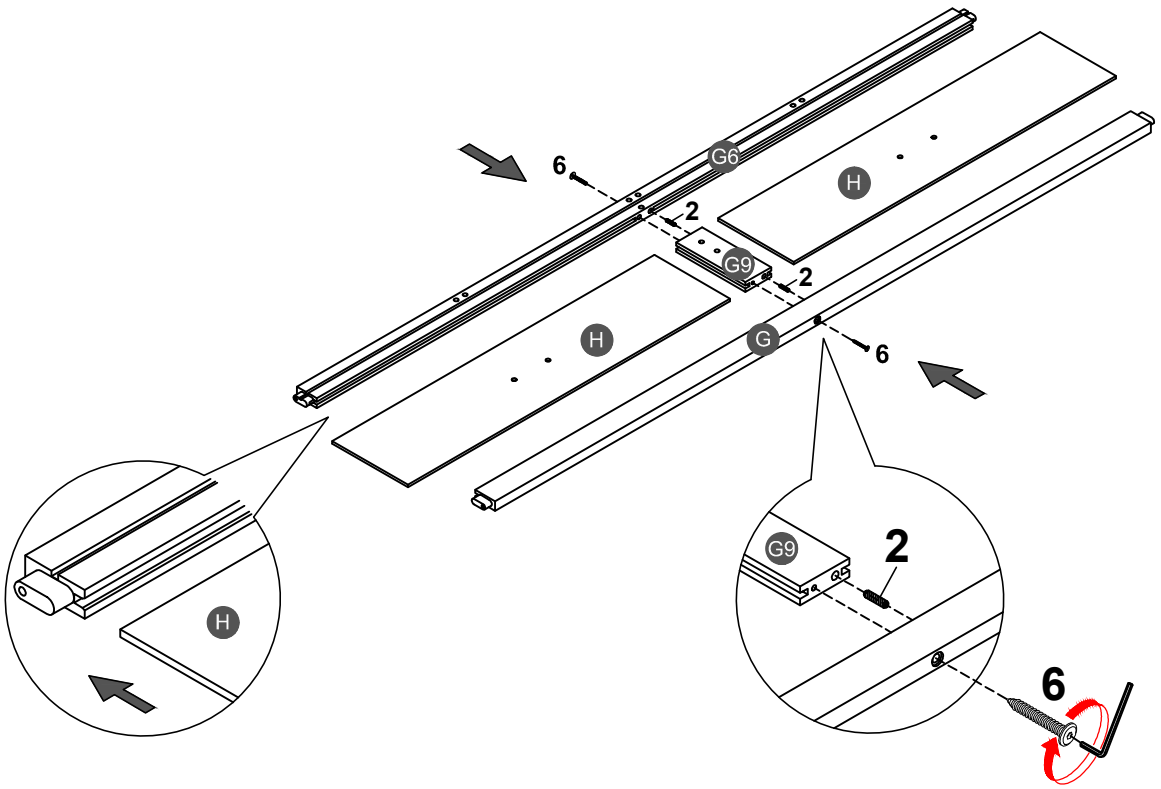

2
2PCS
6
2PCS

STEP 28:

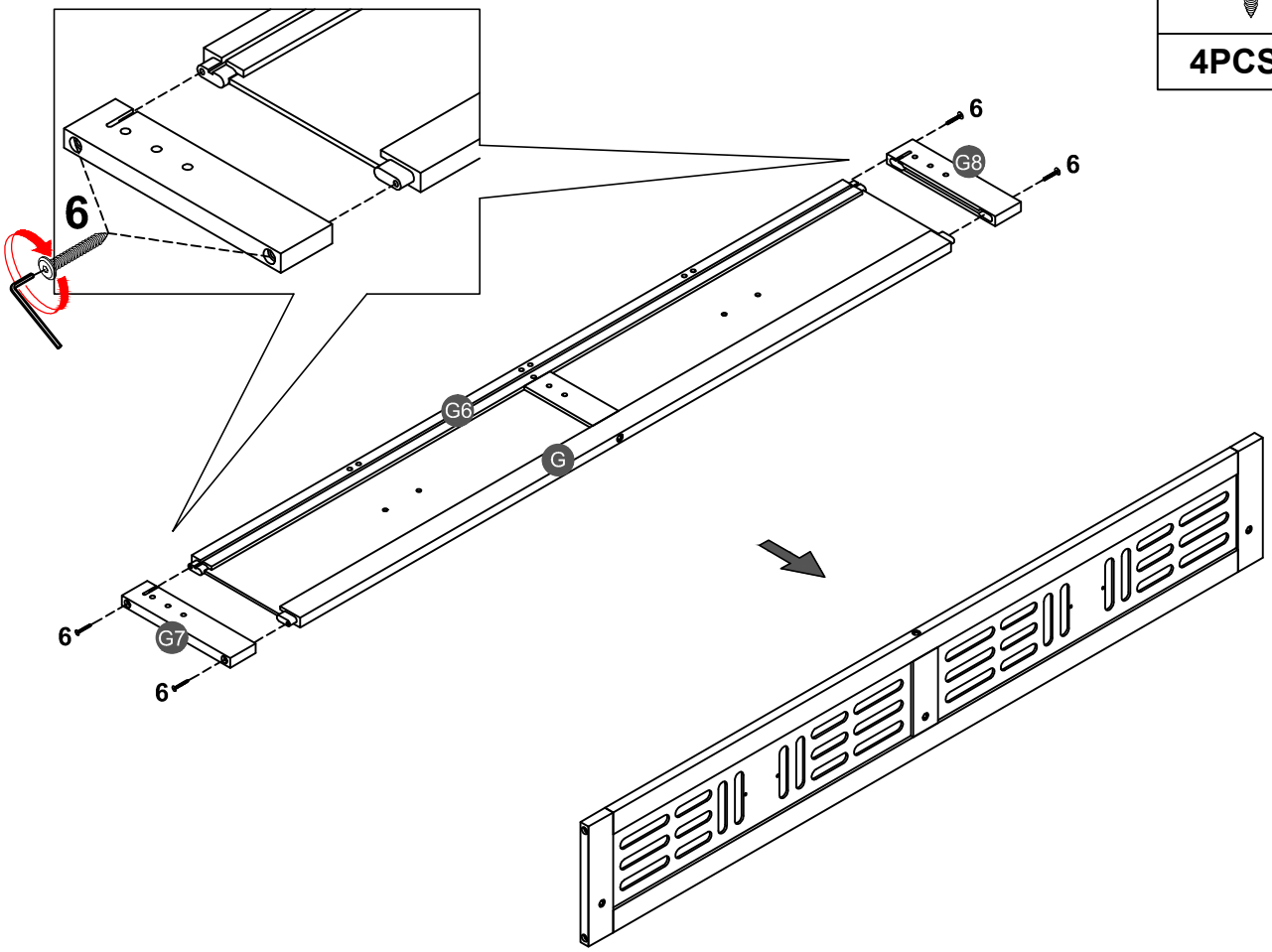

6
4PCS

STEP 29:

2	4	9
6PCS	3PCS	3PCS

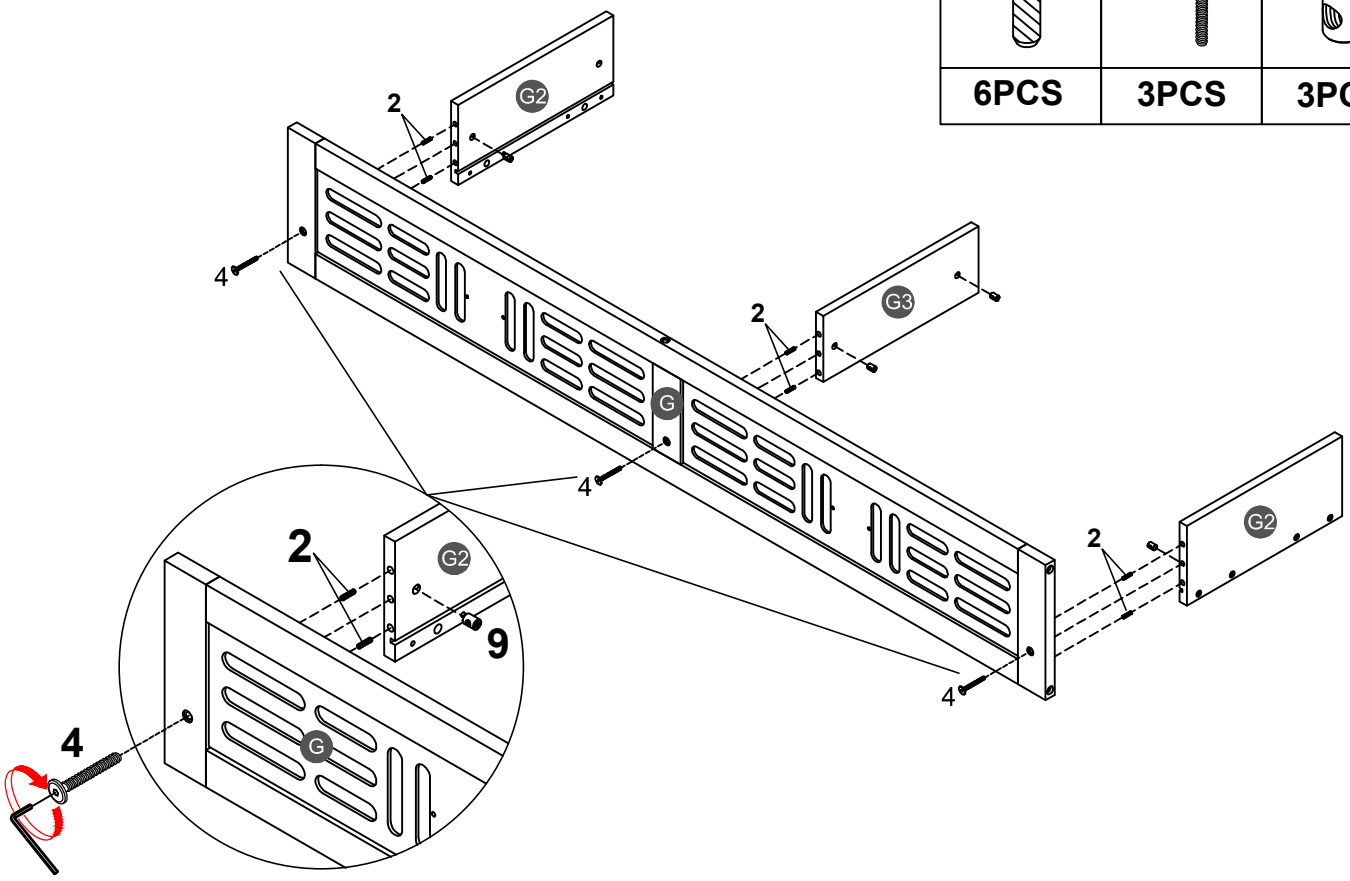

STEP 30:

2	4	9
18PCS	3PCS	3PCS

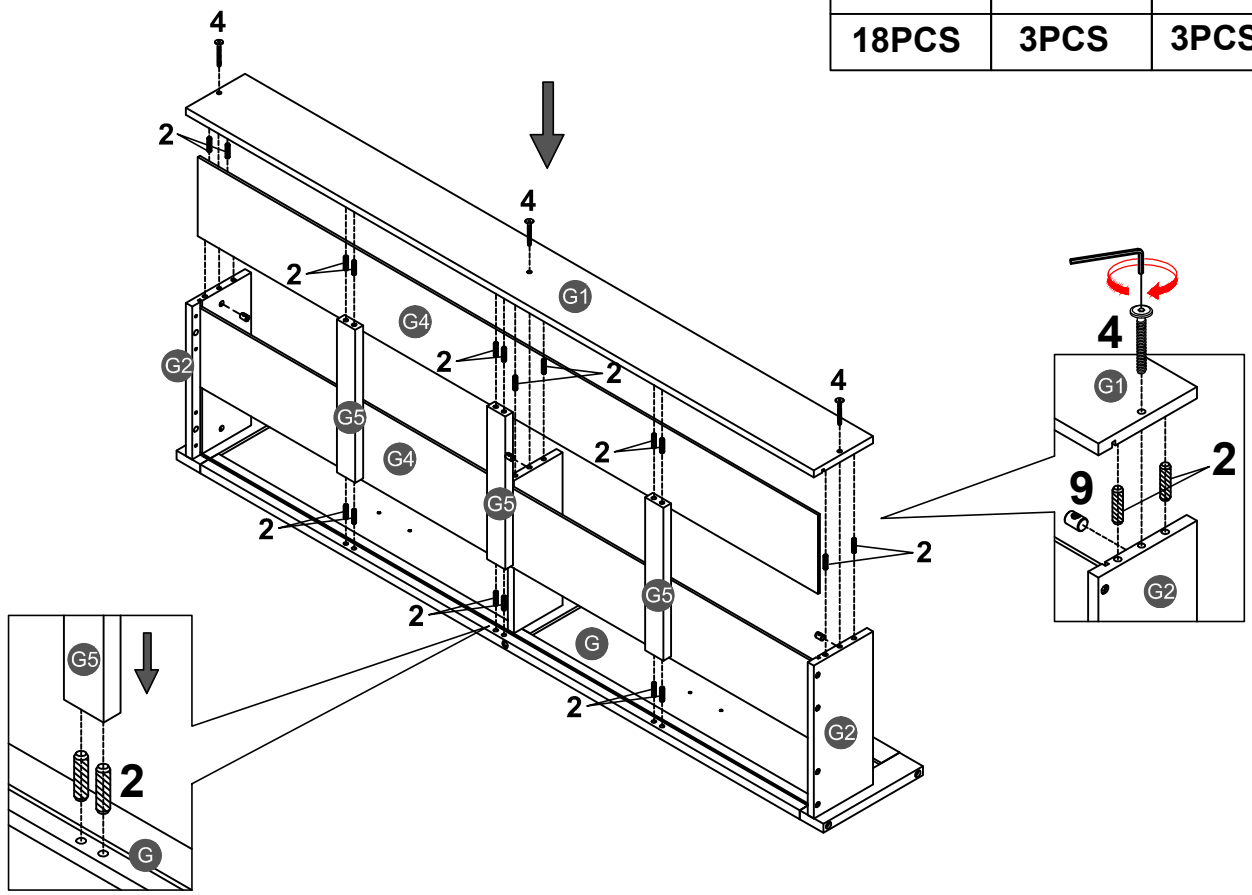

STEP 31:

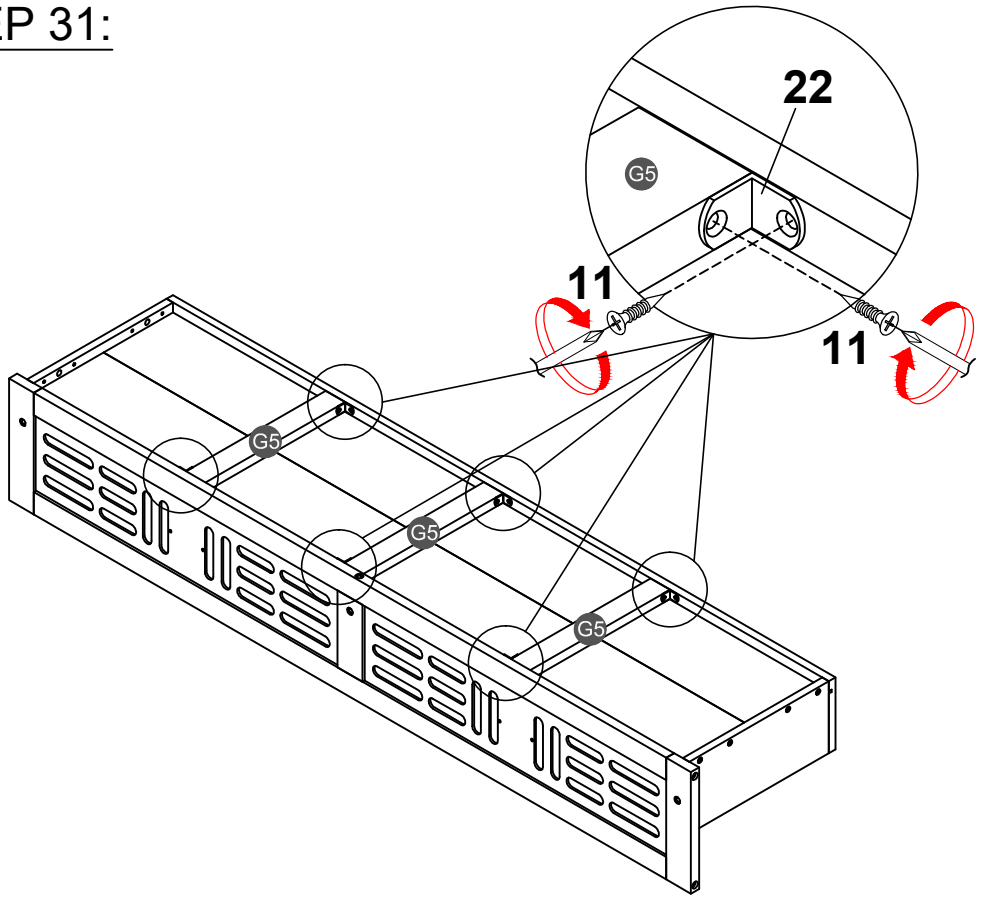

11	22
12PCS	6PCS

STEP 32:

1	10	13	14	15
4PCS	8PCS	4PCS	4PCS	2PCS

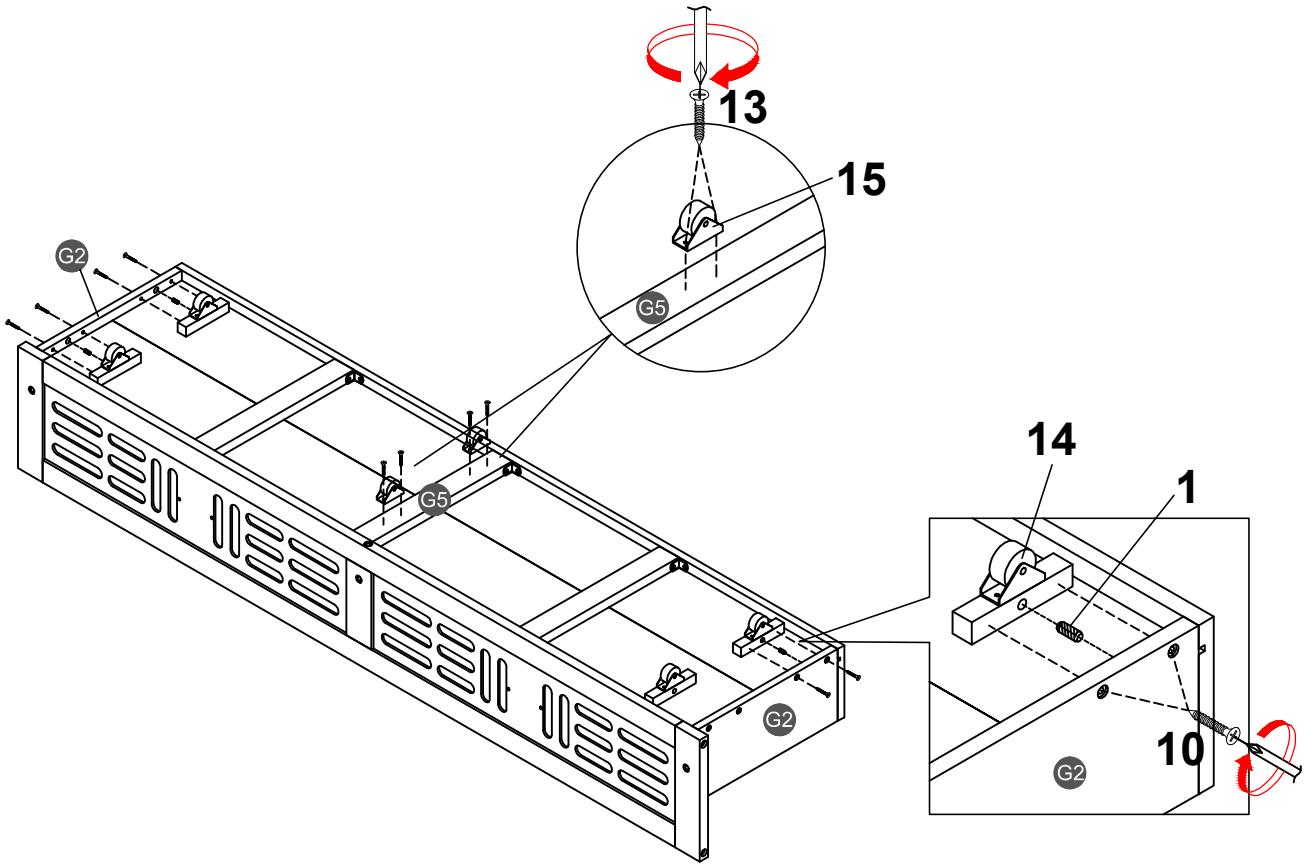

STEP 33:

19	20
2PCS	4PCS

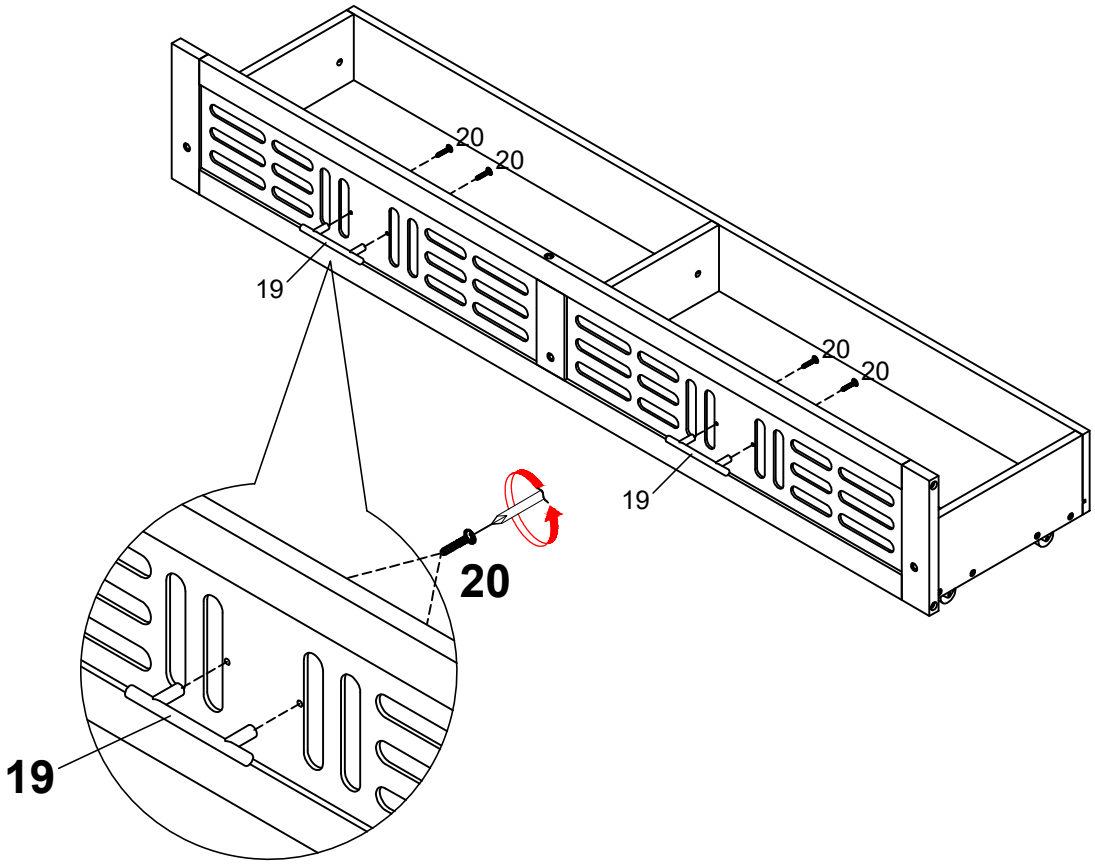

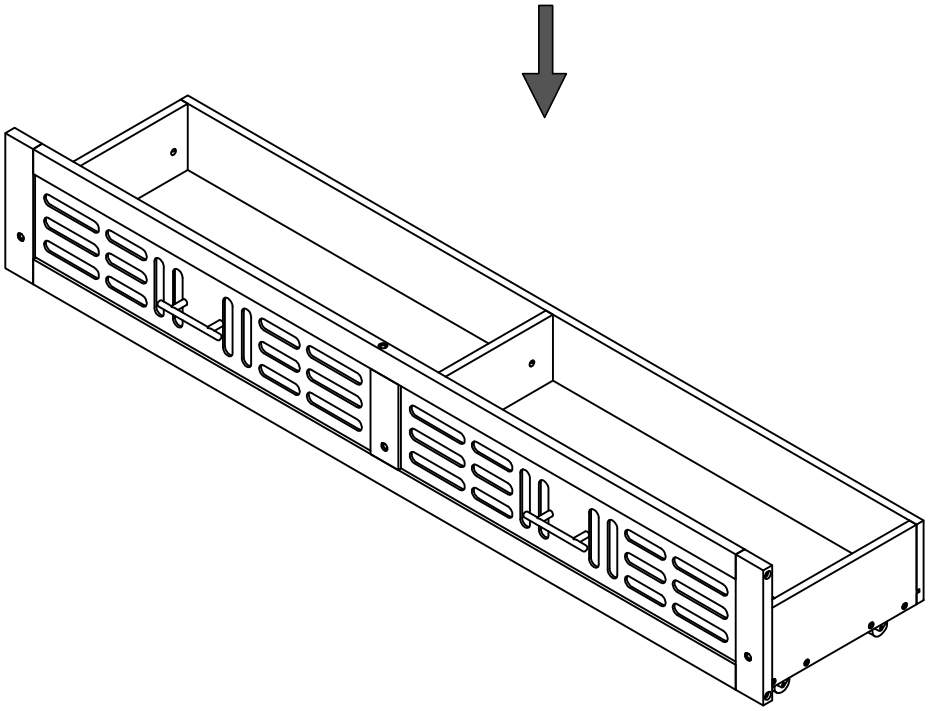

STEP 34:

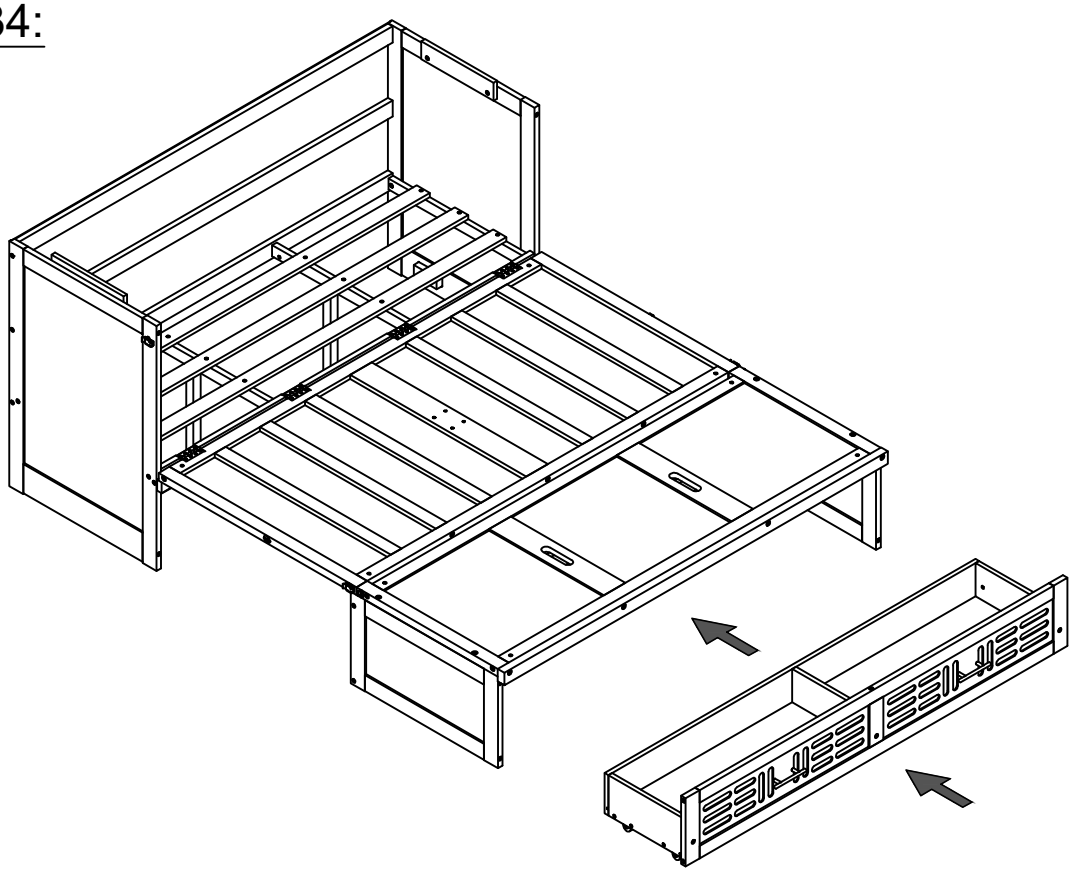

TYPE 1

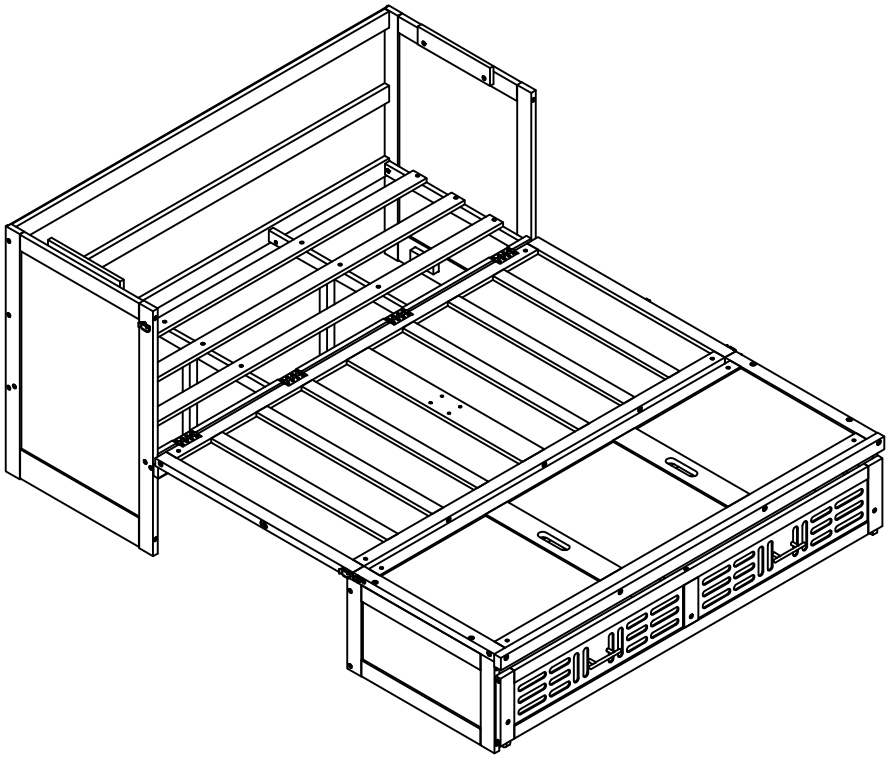

Make sure to tighten all the screws of the bed.

STEP 35:

TYPE 2

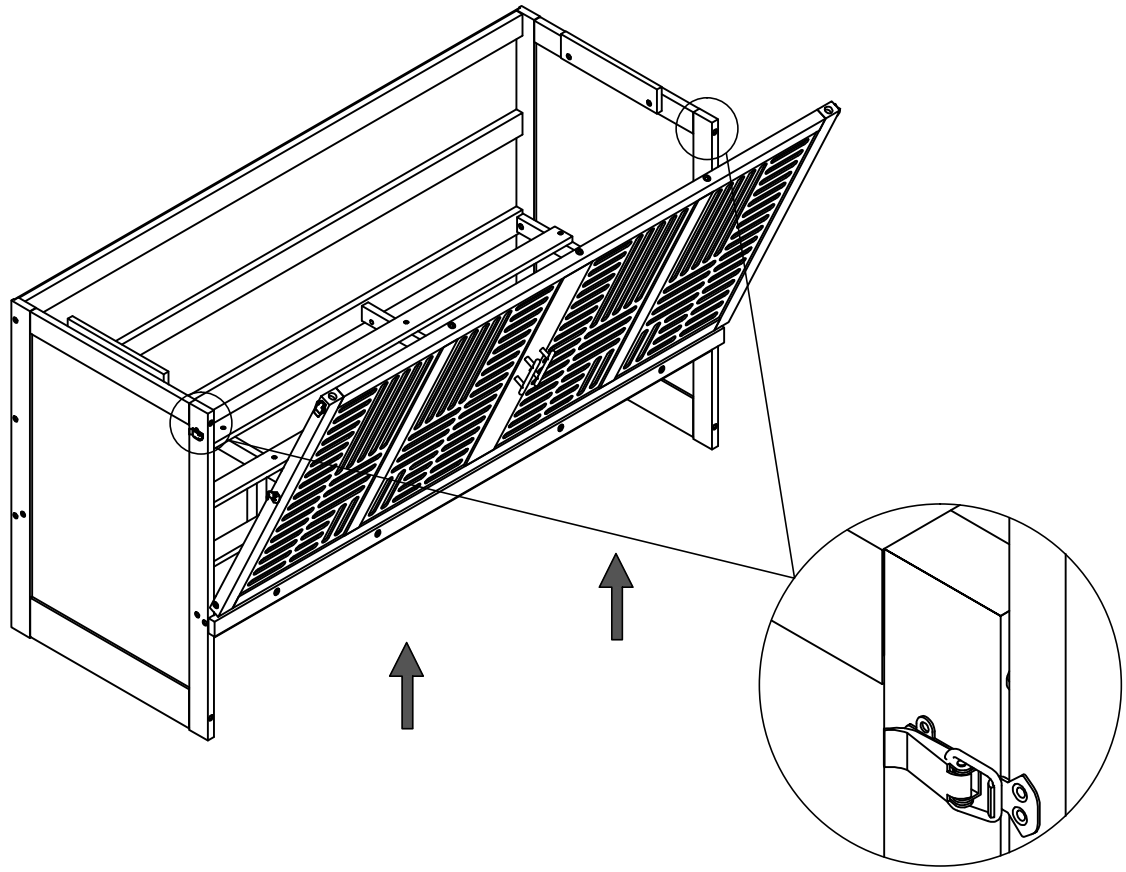

STEP 36:

TYPE 2

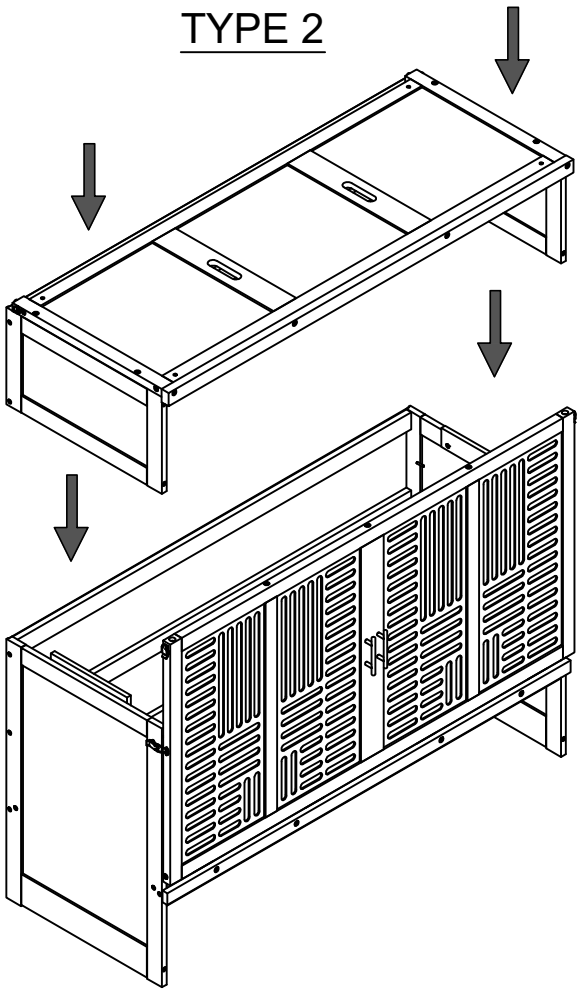

STEP 37:

TYPE 2

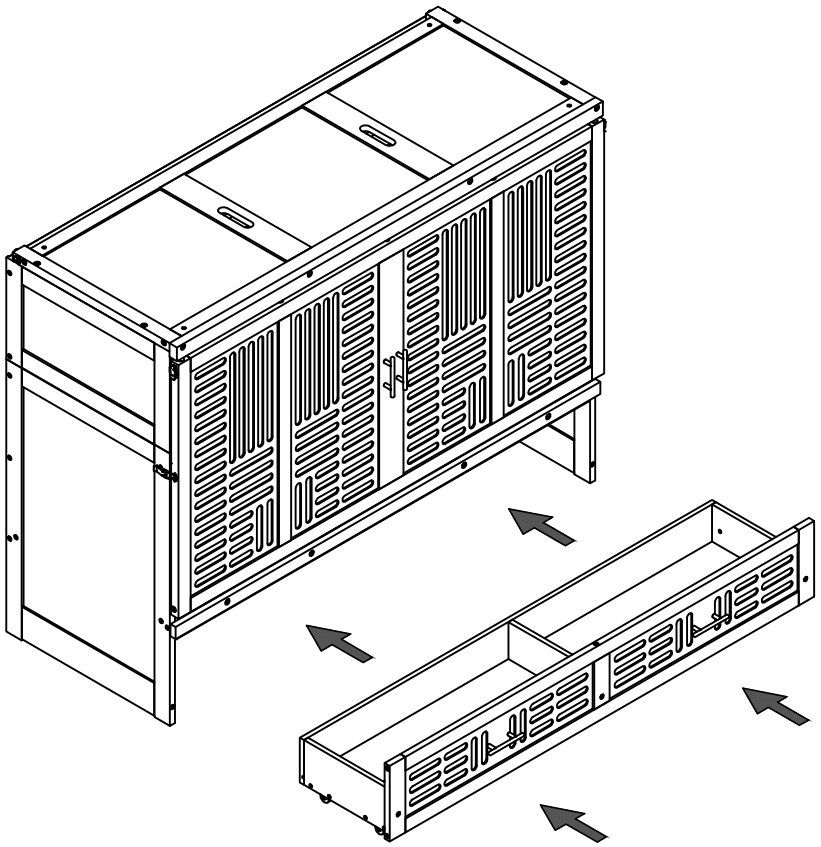

TYPE 2

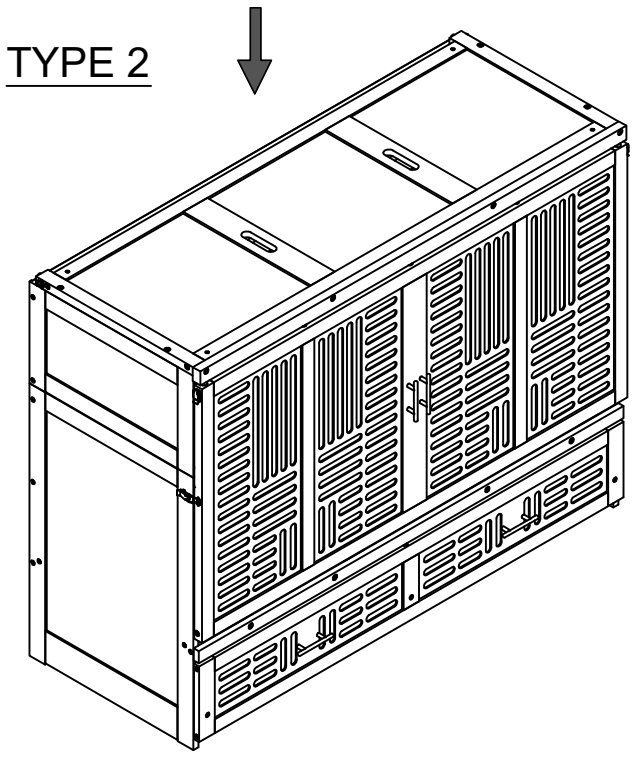

Make sure to tighten all the screws of the bed.

STEP 38:

TYPE 2

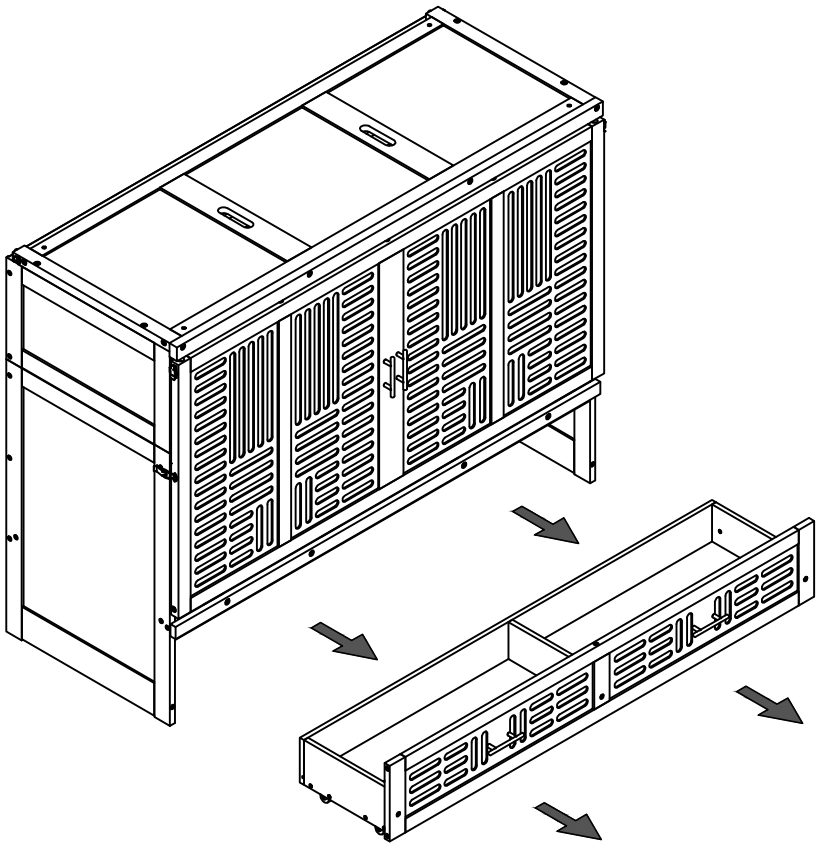

STEP 39:

TYPE 2

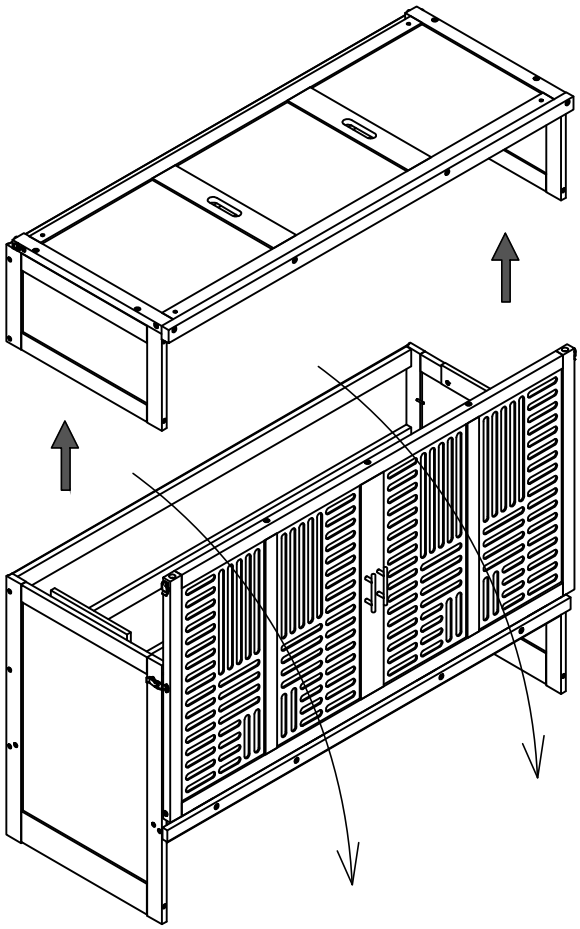

STEP 40:

TYPE 2

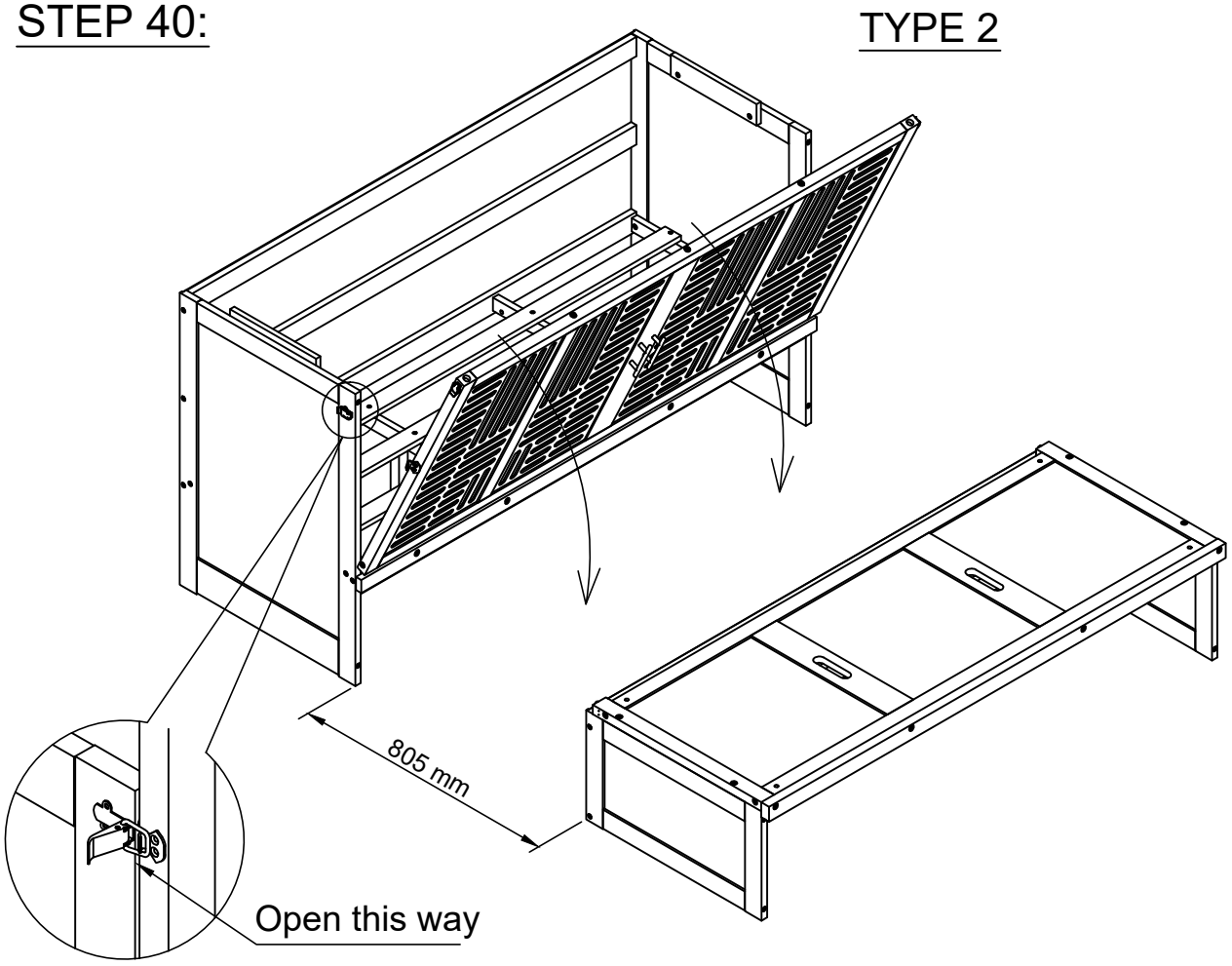

STEP 41:

TYPE 2

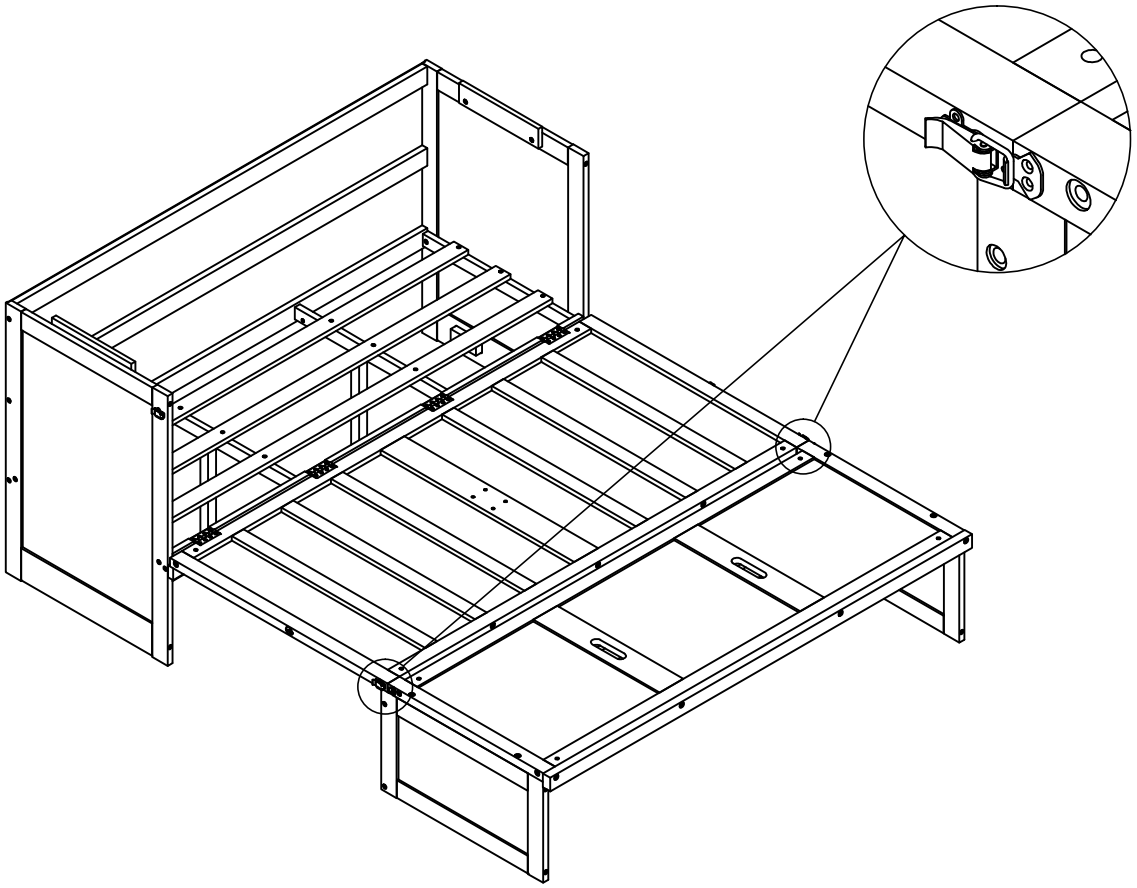

STEP 42:

TYPE 2

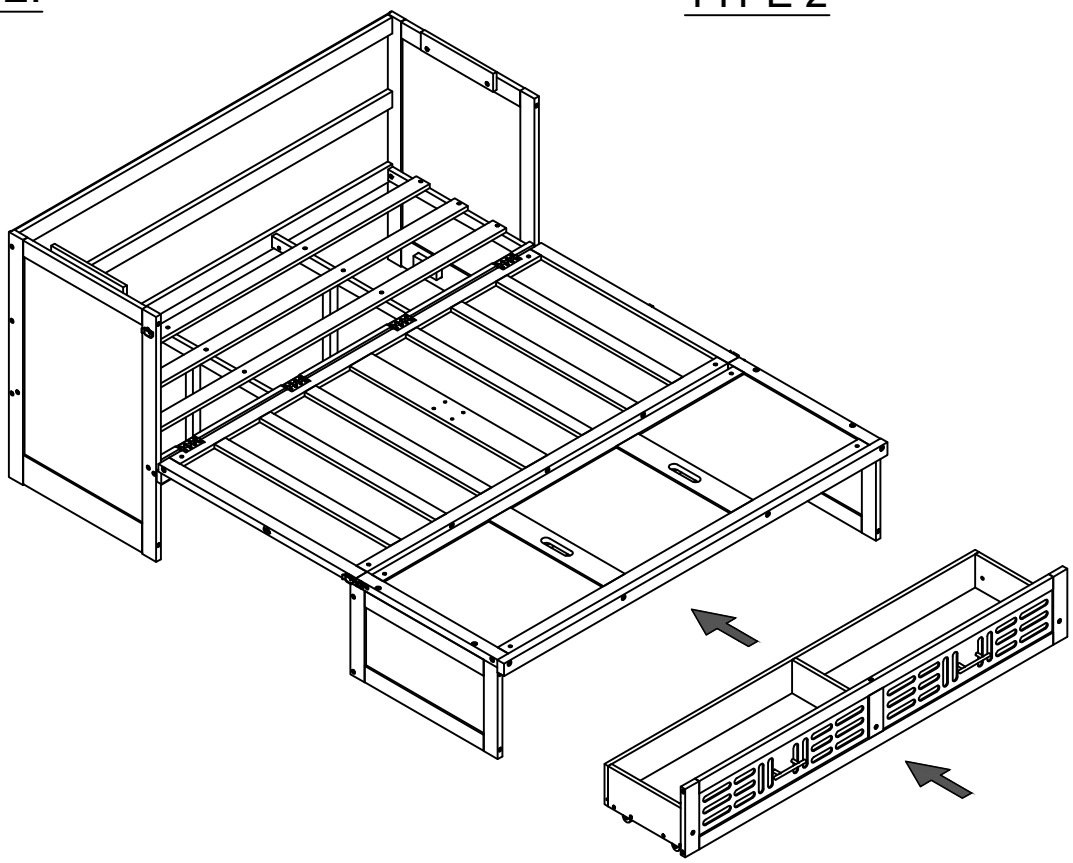

TYPE 2

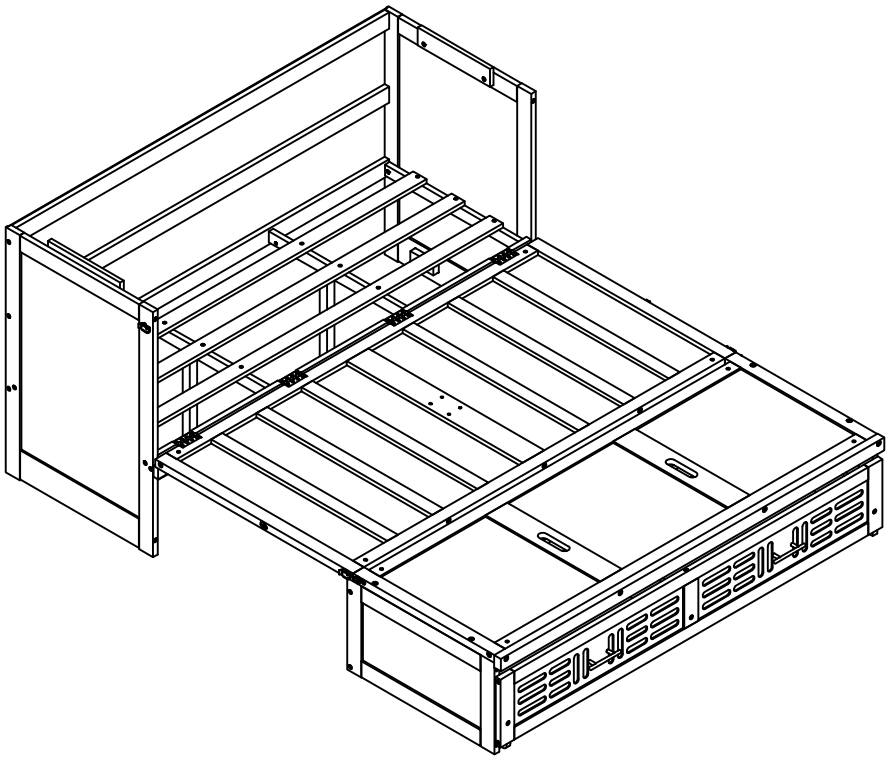

Make sure to tighten all the screws of the bed.

STEP A:

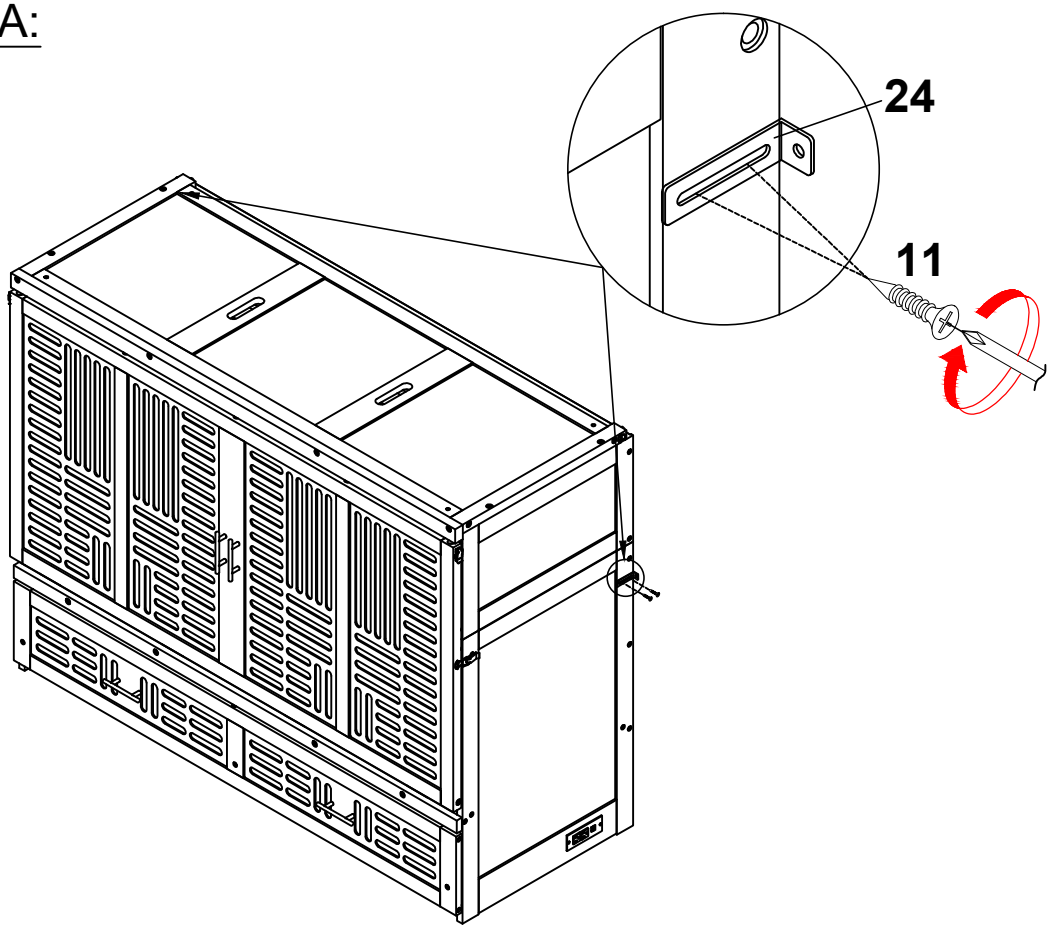

11	4PCS
24	2PCS

Installing the Anti-Tip Bracket.

STEP B:

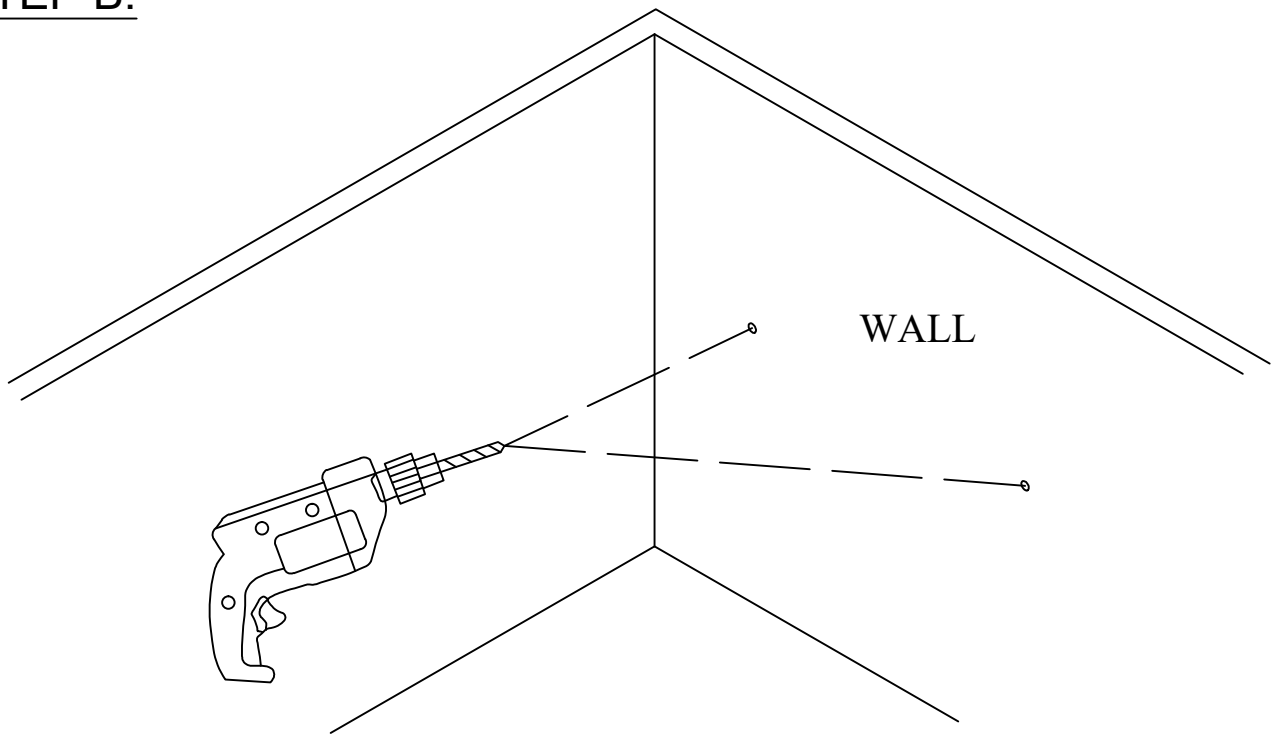

Drill holes in the wall.

STEP C:

23

2PCS

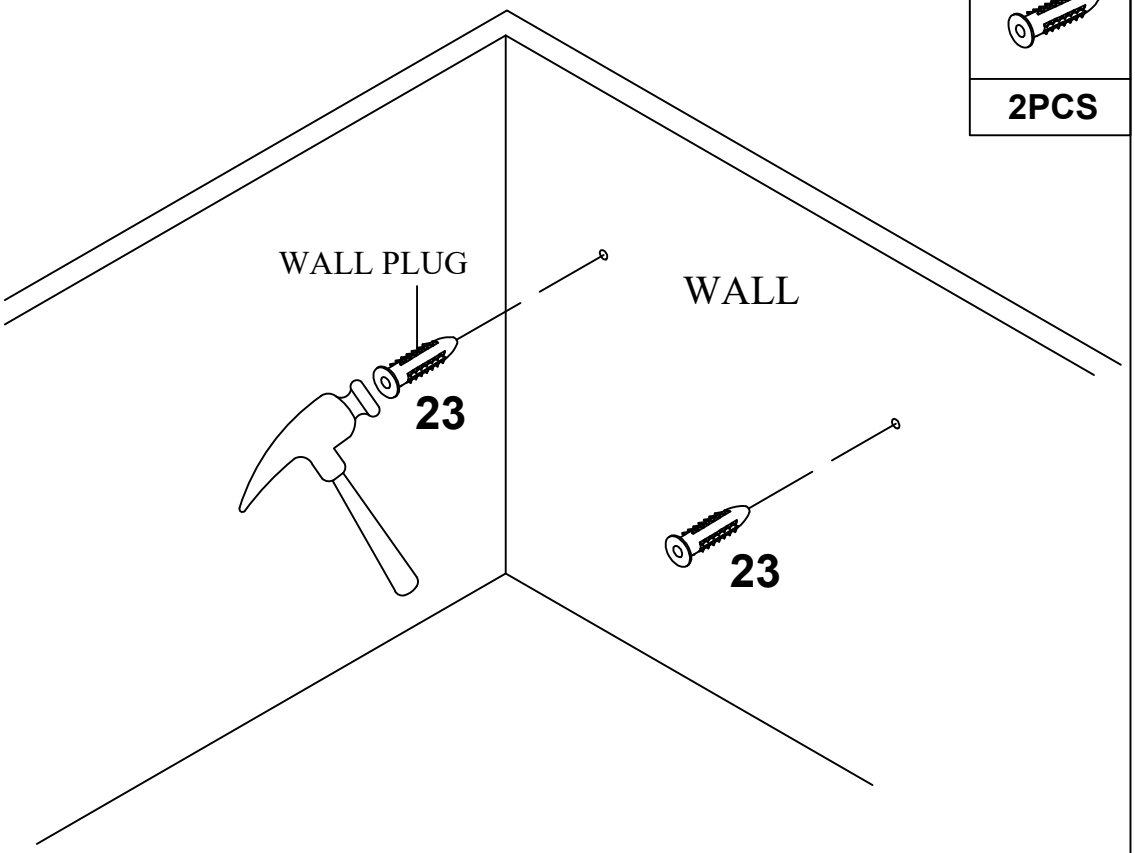

Tap plastic anchor in with a hammer or mallet.

STEP D:

25

2PCS

Fix the bracket to the wall with screw.

