INSTALLATION INSTRUCTIONS

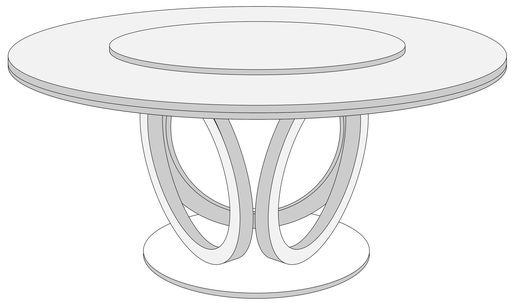

PARTS LIST

Rotary table top

Rotating inner core

Tabletop

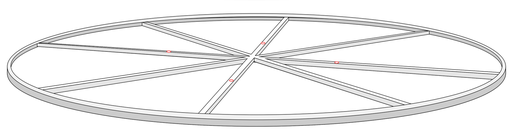

Mounting Ring

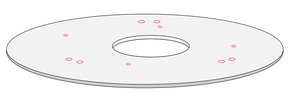

Connecting disc

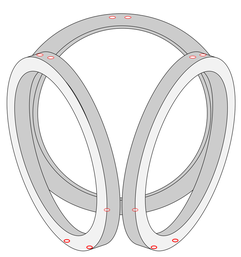

Table leg x 3

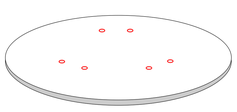

base

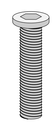

screw x 16

gasket x 16

nut x 16

Non-slip rubber pad x 10

Hex key

MARBLE CLEANING, MAINTENANCE, PRECAUTIONS

The color pen permeates the color
· Regular cleaning: The marble floor should be cleaned with special cleaning agents to avoid damaging the surface structure. In general, a neutral cleaner, such as alcohol or warm water, should be used and then wiped with a clean cloth to maximize the cleaning of the surface
· Decontamination: To remove dirt on the marble floor, you can use a one-time wet, and then rinse it off with water. If there is oil, you can use dish soap, but be careful not to use too much, so as not to damage the floor structure
· maintenance:
The marble floor should be regularly maintained with paraffin wax to increase the surface light, and to effectively protect the surface from pollution erosion. In addition, it is also important to polish the ground regularly to maintain the finish and water resistance of the ground. Note: When cleaning, note: do not use detergent containing acid components, do not use metal or other hard objects to clean the marble floor, so as not to wear the surface

STEP 1

Align the table legs with the base holes and secure them with screws and nuts

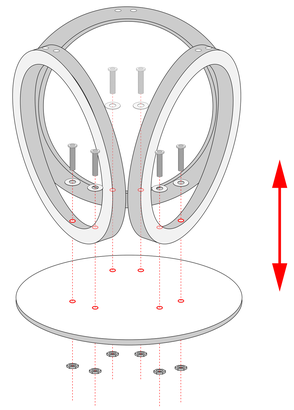

STEP 2

Align the disc with the holes in the foot of the table and secure it with screws and nuts

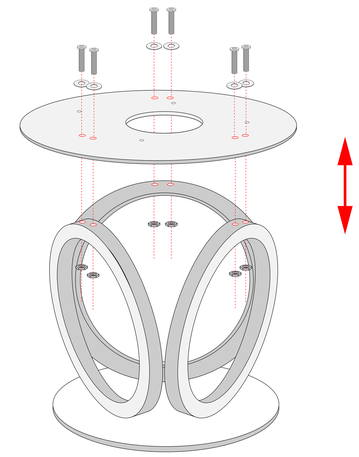

STEP 3

Align the connecting tray with the assembly ring holes and secure it with screws and nuts

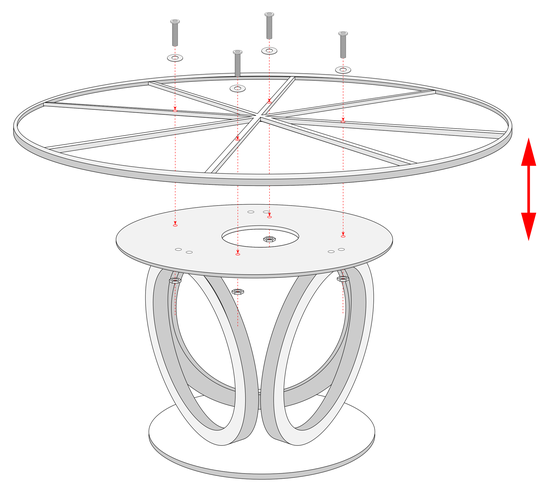

STEP 4

After removing the white paper from the non-slip pad, fix the non-slip pad to the metal frame

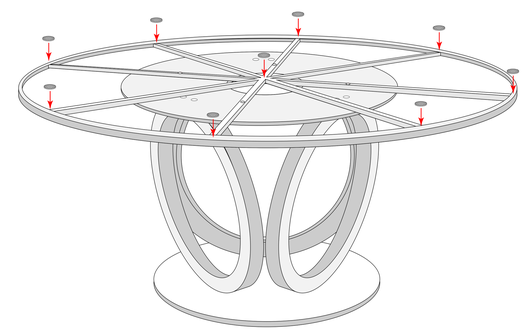

STEP 5

Place the table top on the assembly ring

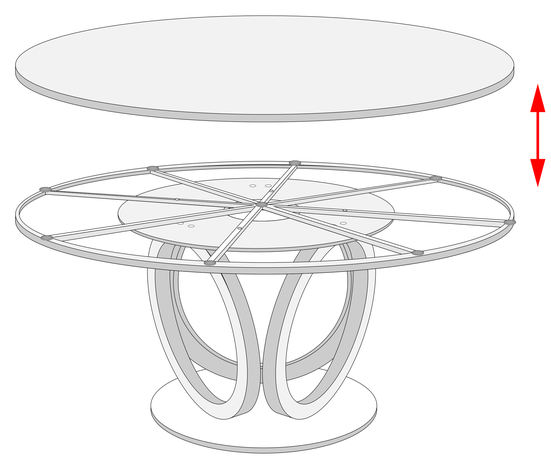

STEP 6
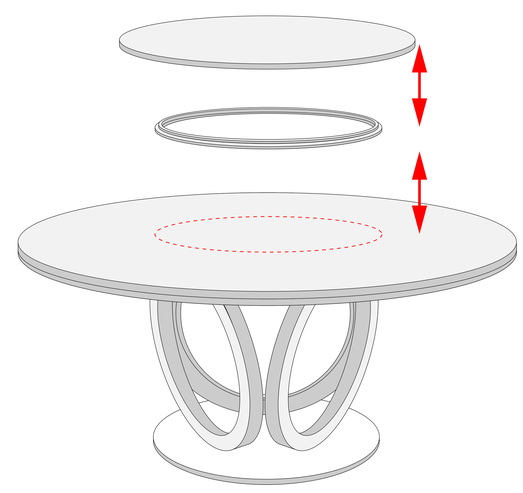
Place the high side of the inner core facing upward in the center of the table top, and finally place the rotating table top on it