INSTALLATION

Product Manual

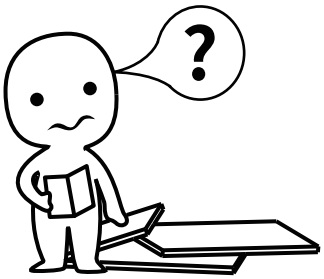

IMPORTANT INFORMATION!

Please read the entire manual before starting to assemble and/or using this product. Follow the manual thoroughly and keep it for further reference.

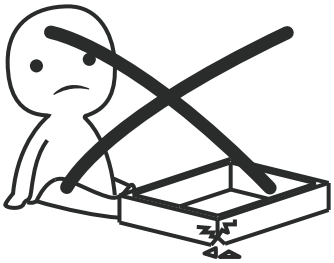

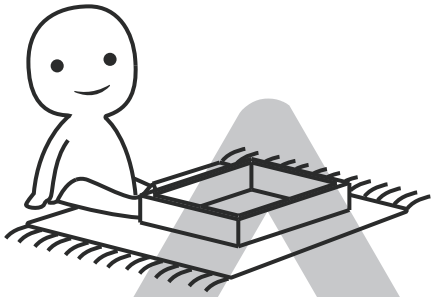

AVOID SCRATCHES!

In order to avoid scratching this furnuture should be assembled on a soft layer-could be a rug.

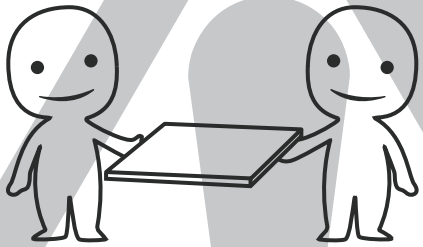

IMPROVE EFFICIENCY !

Try to find a partner to install with you, which can speed up the installation efficiency and shorten the time.

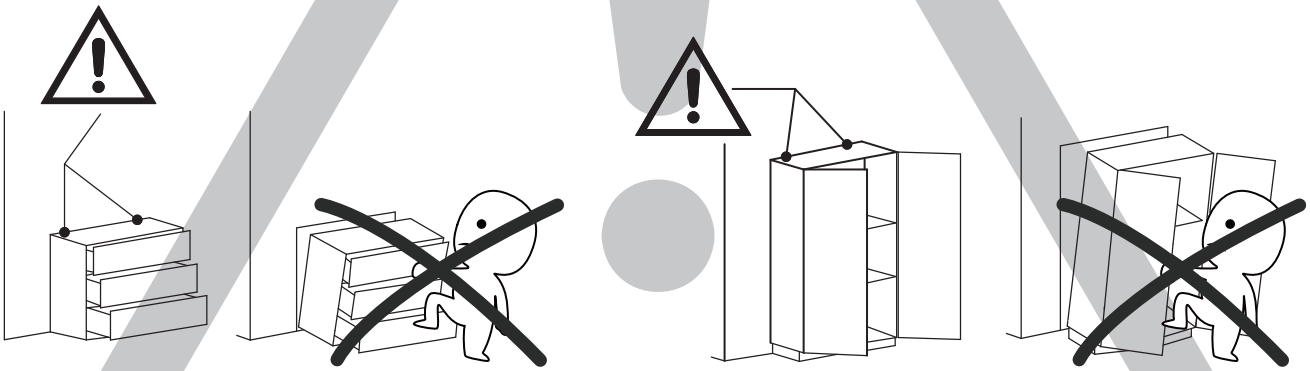

ANTI-TOPPLE WARNING !

Overturned furniture can cause serious or fatal crush injuries. To prevent tipping over, be sure to use the wall attachment, if not included with this product. Please purchase the wall attachment that fit your wall. If unsure, seek professional advice. Please read and follow each step of the instructions carefully.

IMPORTANT !

It is important that any product which is assembled using any kind of screw is re-tightened 2 weeks after assembly,and once every 3 months - in order to assure stability through-out the lifespan of the product.

For regular maintenance and cleaning of the product, for the frame, please use a rag dipped in neutral detergent to fully wipe it, and then dry it with a clean rag.For glass materials, wipe with a rag dampened with water glass cleaner, and then dry with a dry rag.

Do not use an electric screwdriver, and do not use too much force when installing, because the board is easy to break.

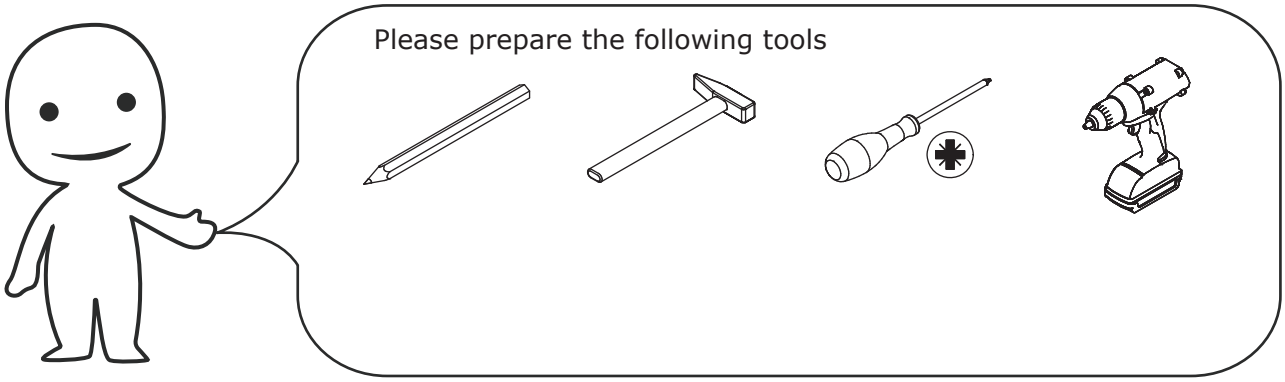

When installing, please carefully confirm whether each screw corresponds to the manual, accessories with similar shapes can be distinguished by size

A x 8	B x 71	C x 4	D x 21
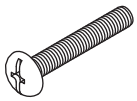 CRE0420A	∅2 x 16 mm	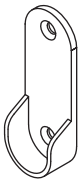	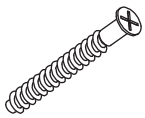 CRC0540A

E x 42	F x 72	G x 42	H x 6
CRB1595A	CRD0416A	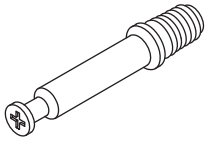 CRA0635A	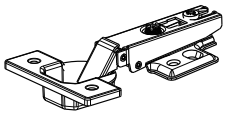 DGA861A

I x 6	J x 4	K x 1	L x 20
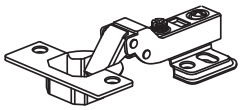 DGA861B	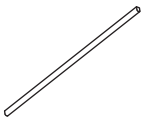 400 mm	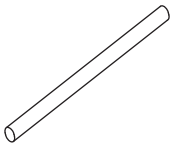 376 mm	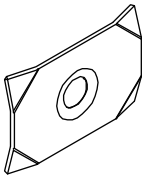

M x 1	N x 2	P x 8
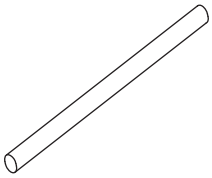 769 mm	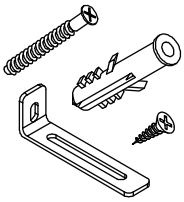	CRD3514A

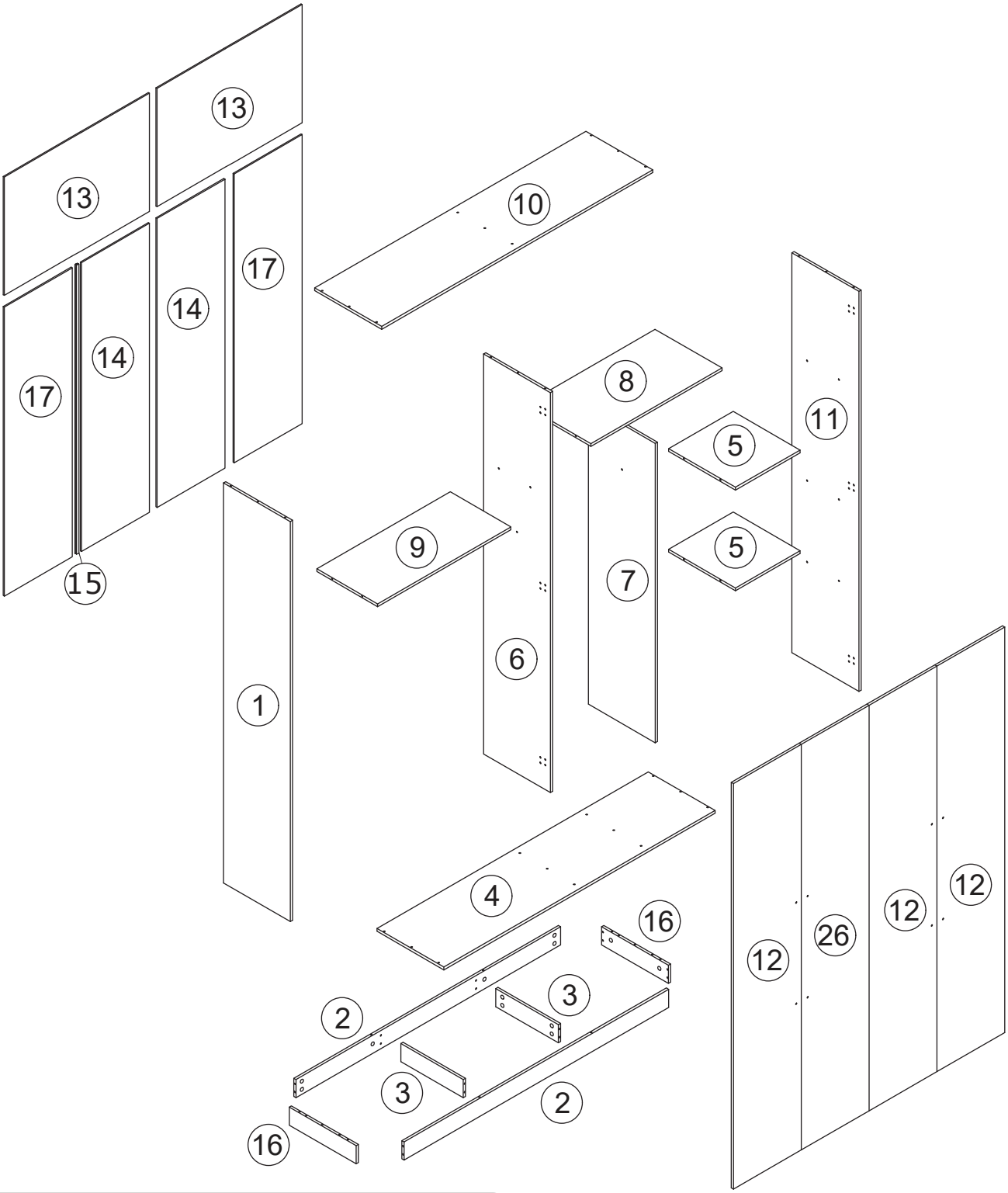

⚠WARNING

Children have died from furniture tipover.To reduce the risk of furniture tipover:

- ALWAYS install tipover restraint provided.
- NEVER put a TV on this product.
- NEVER allow children to stand,climb or hang on drawers,doors,or shelves.
- NEVER open more than one drawer at a time.
- Place heaviest items in the lowest drawers.

This is a permanent label.
Do not remove!

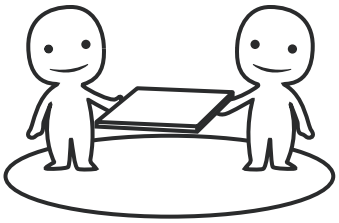

ASSEMBLED BY 2 ADULTS

1

G x 4

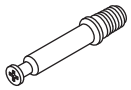

CRA0635A

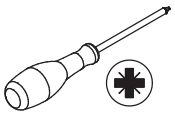

Insert eccentric rod(G) into board 7 with a screwdriver as shown.

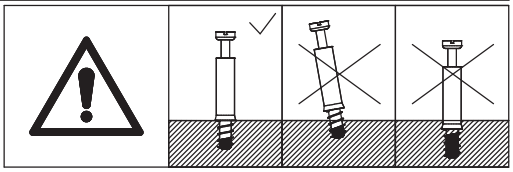

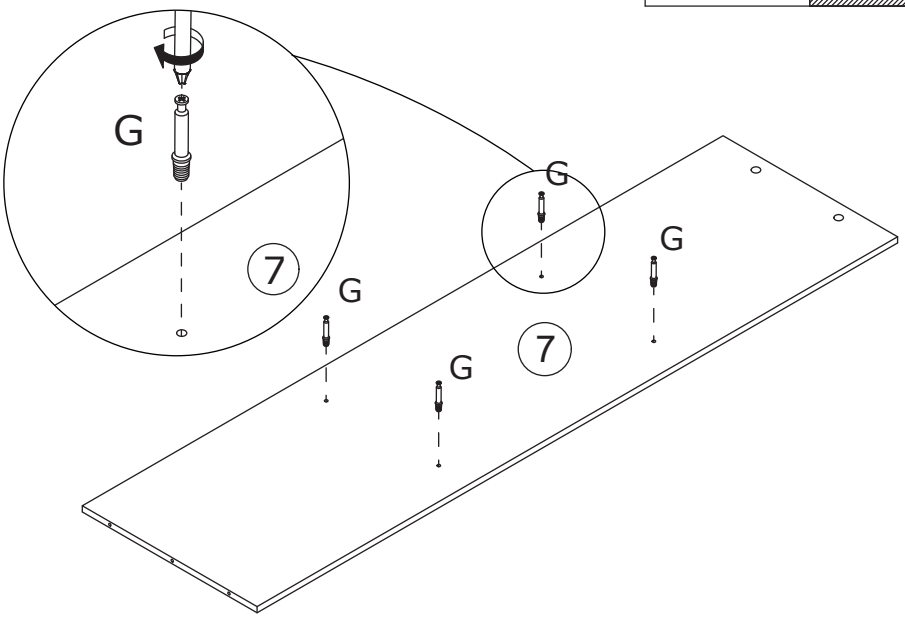

2

E x 4

CRB1595A

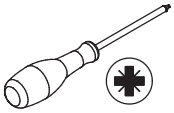

Attach two board 5 to board 7, put cam locks(E) into holes in plate 5 and turn clockwise to tighten as shown.

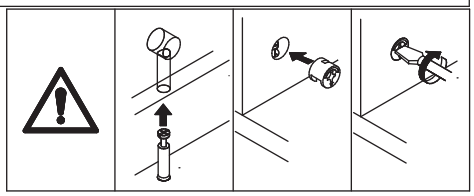

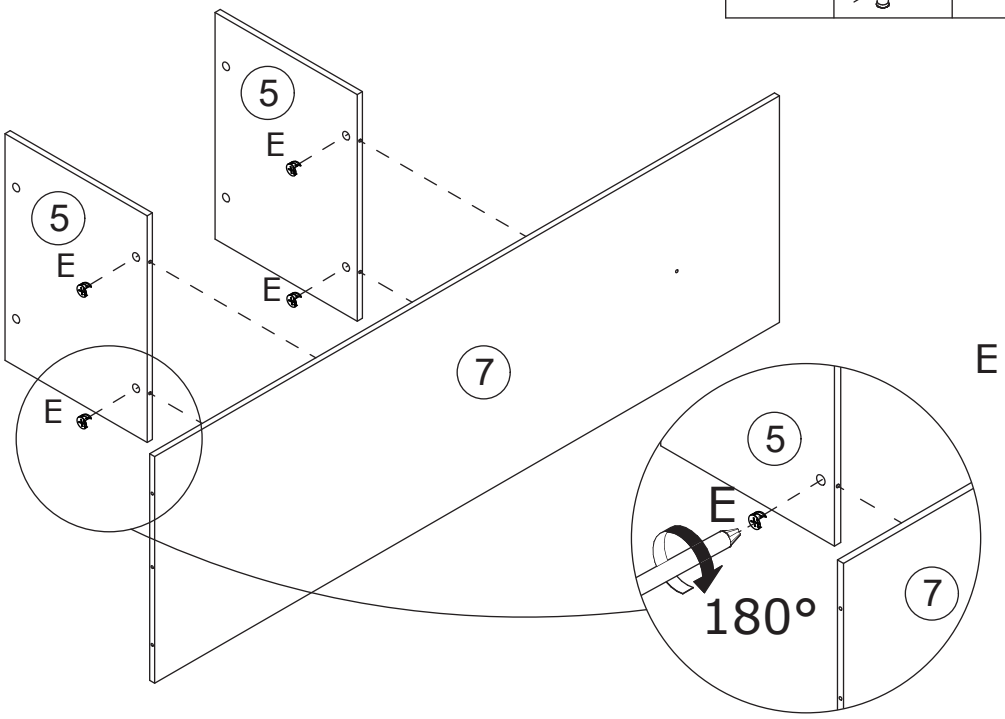

3

G x 2

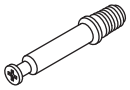

CRA0635A

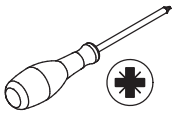

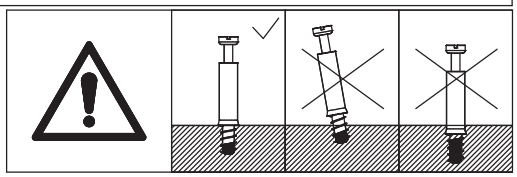

Insert eccentric rod(G) into board 8 with a screwdriver as shown.

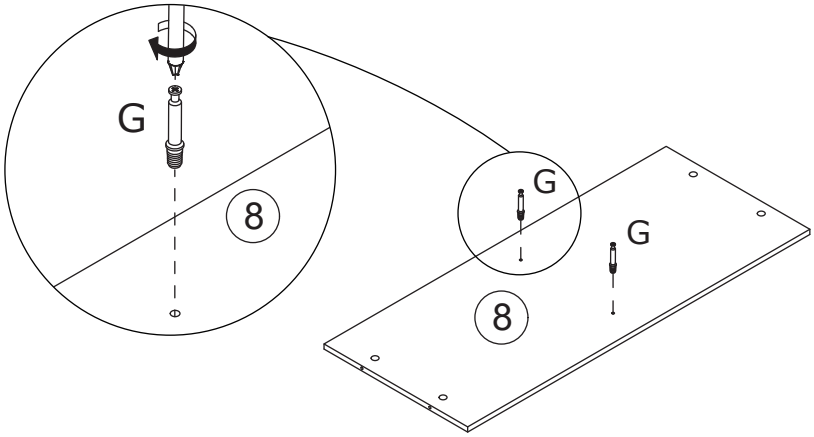

4

E x 2

CRB1595A

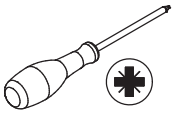

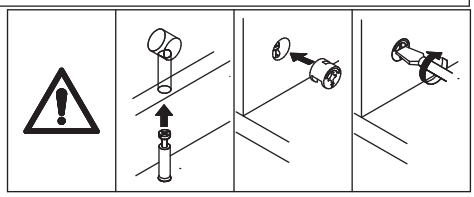

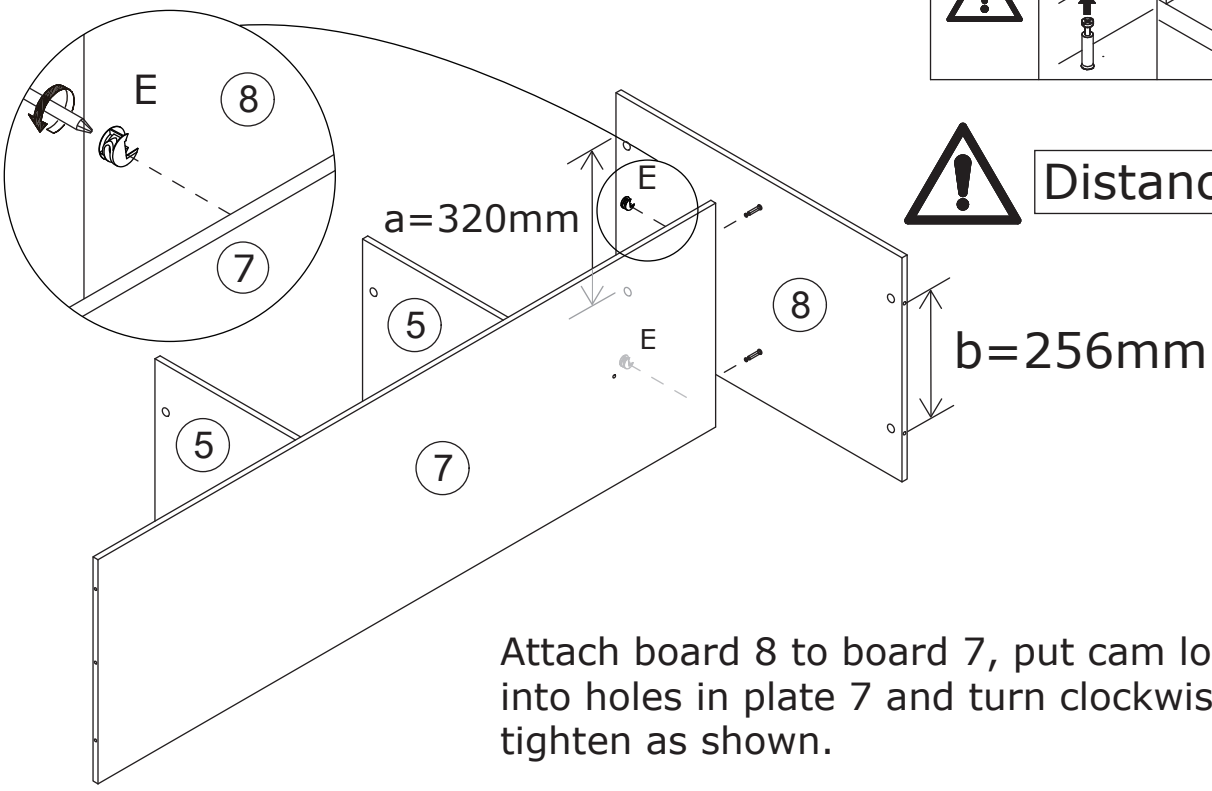

Distance:a>b

Attach board 8 to board 7, put cam locks(E) into holes in plate 7 and turn clockwise to tighten as shown.

5

G x 4

CRA0635A

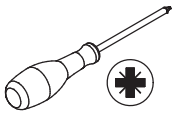

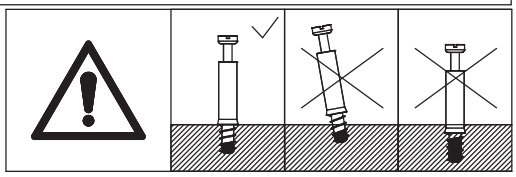

Insert eccentric rod(G) into corresponding holes in board 6 at first.
Flip the plate, insert quickfit screw(G) as shown.

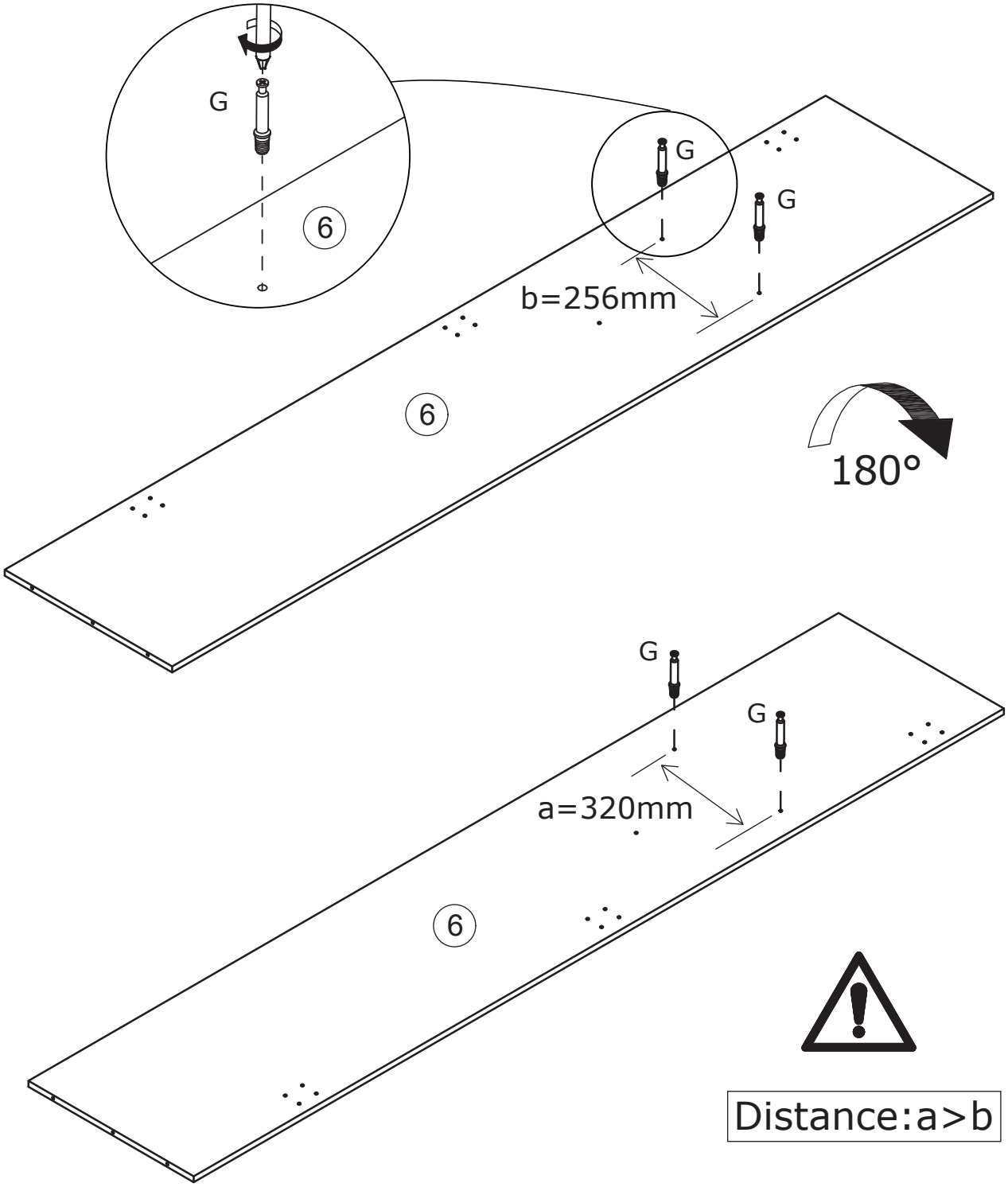

6

E x 2

CRB1595A

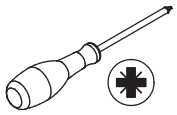

Attach board 6 to board 8, put cam locks(E) into holes in plate 8 and turn clockwise to tighten as shown.

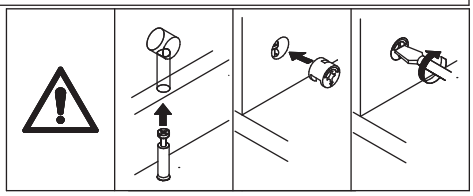

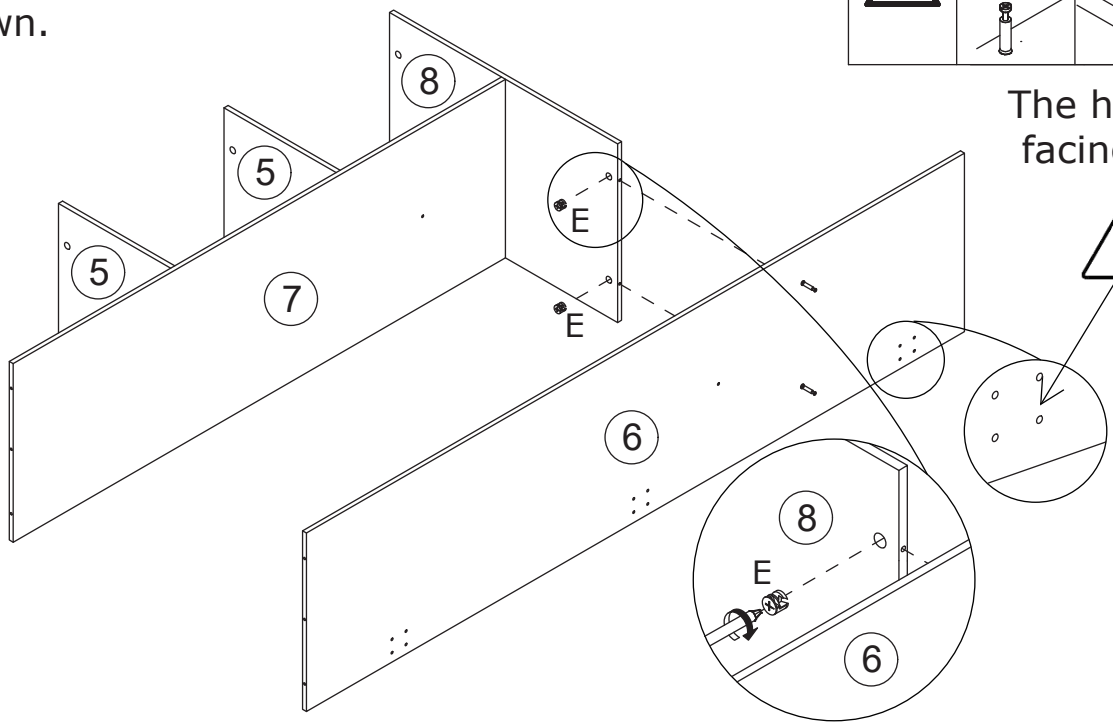

The holes are facing down

7

E x 2

CRB1595A

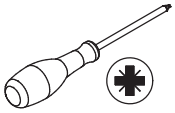

Attach board 9 to board 6, put cam locks(E) into holes in plate 9 and turn clockwise to tighten as shown.

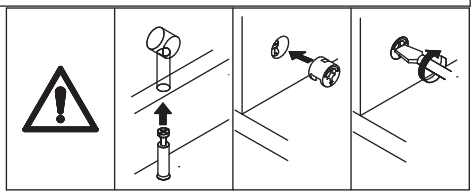

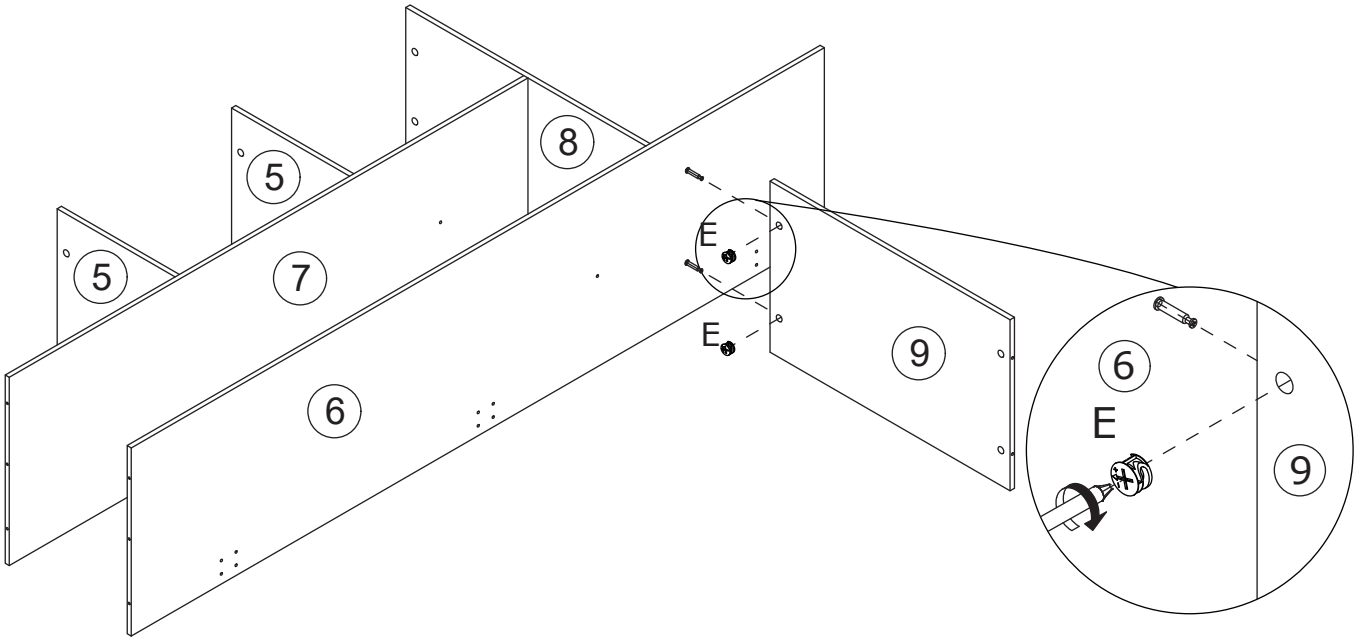

8

G x 6

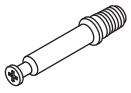

CRA0635A

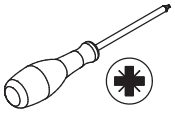

Insert eccentric rod(G) into corresponding holes in board 11 as shown.

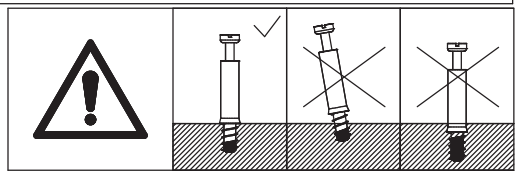

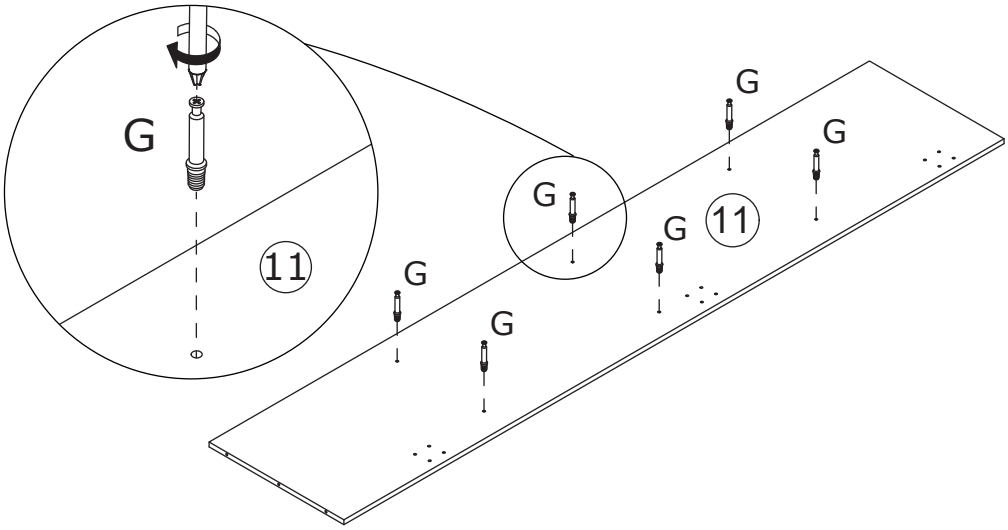

9

E x 6

CRB1595A

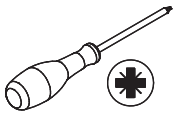

Attach board 11 to board 5 and 8, put cam locks(E) into holes in plate 5,8 and turn clockwise to tighten as shown.

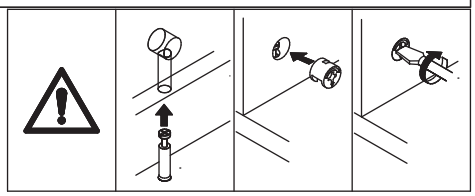

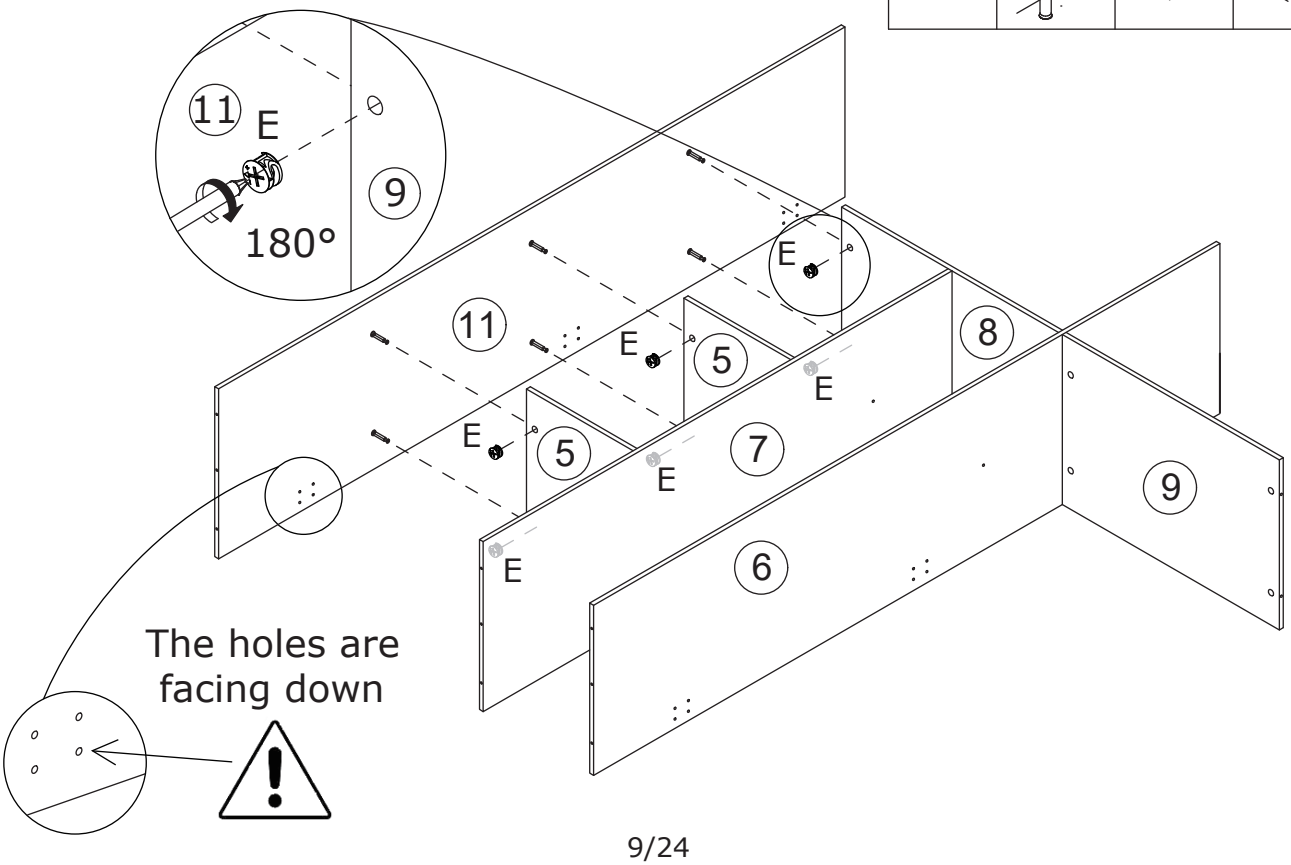

10

G x 2

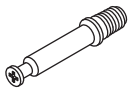

CRA0635A

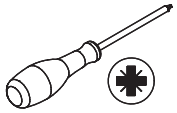

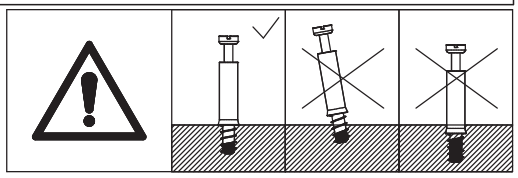

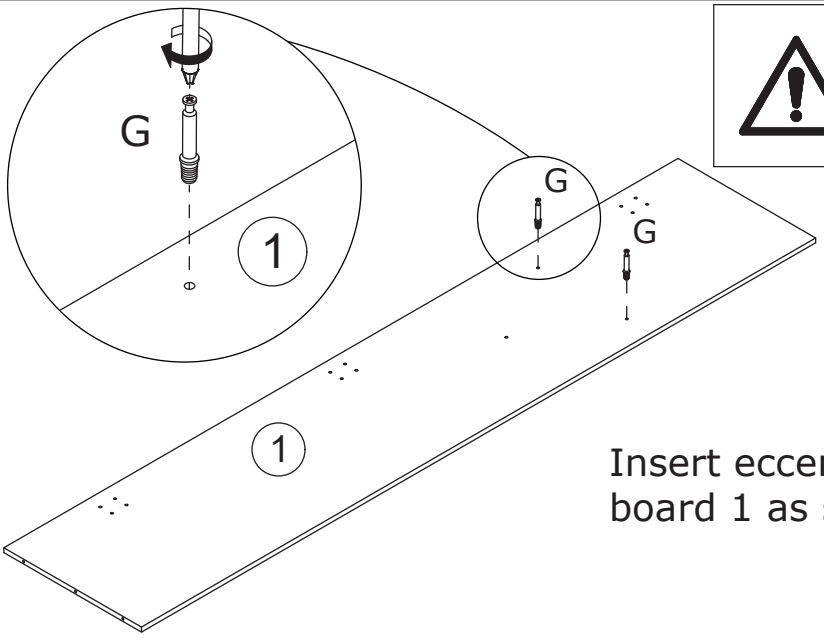

Insert eccentric rod(G) into board 1 as shown.

11

E x 2

CRB1595A

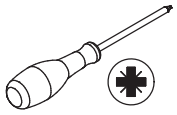

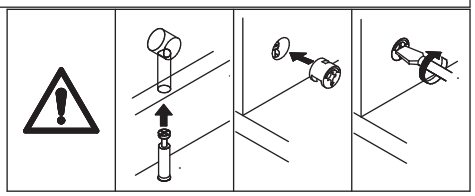

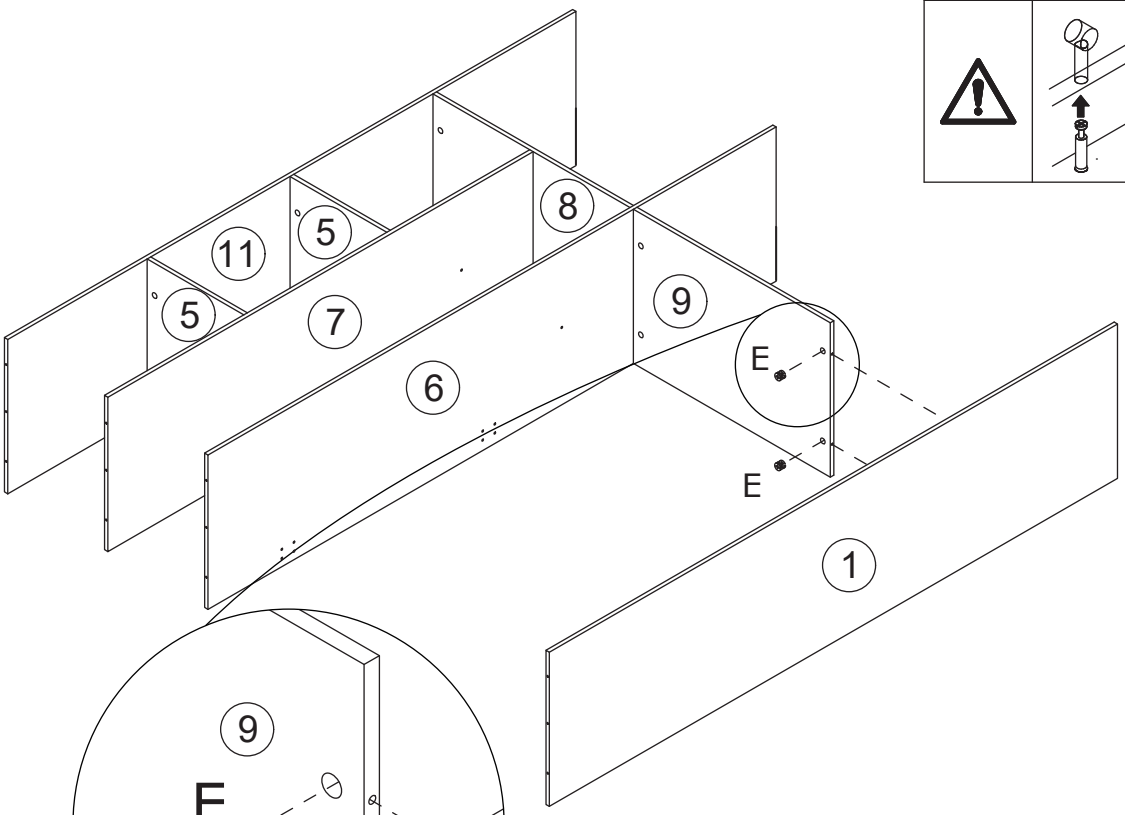

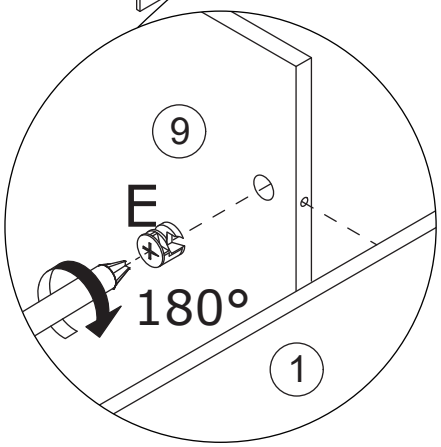

Attach board 1 to board 9, put cam locks(E) into holes in plate 9 and turn clockwise to tighten as shown.

12

D x 9

CRC0540A

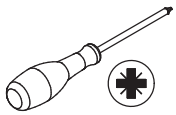

Cover board 10 to board 11,6 and 1, then fix using screw(D) as shown.

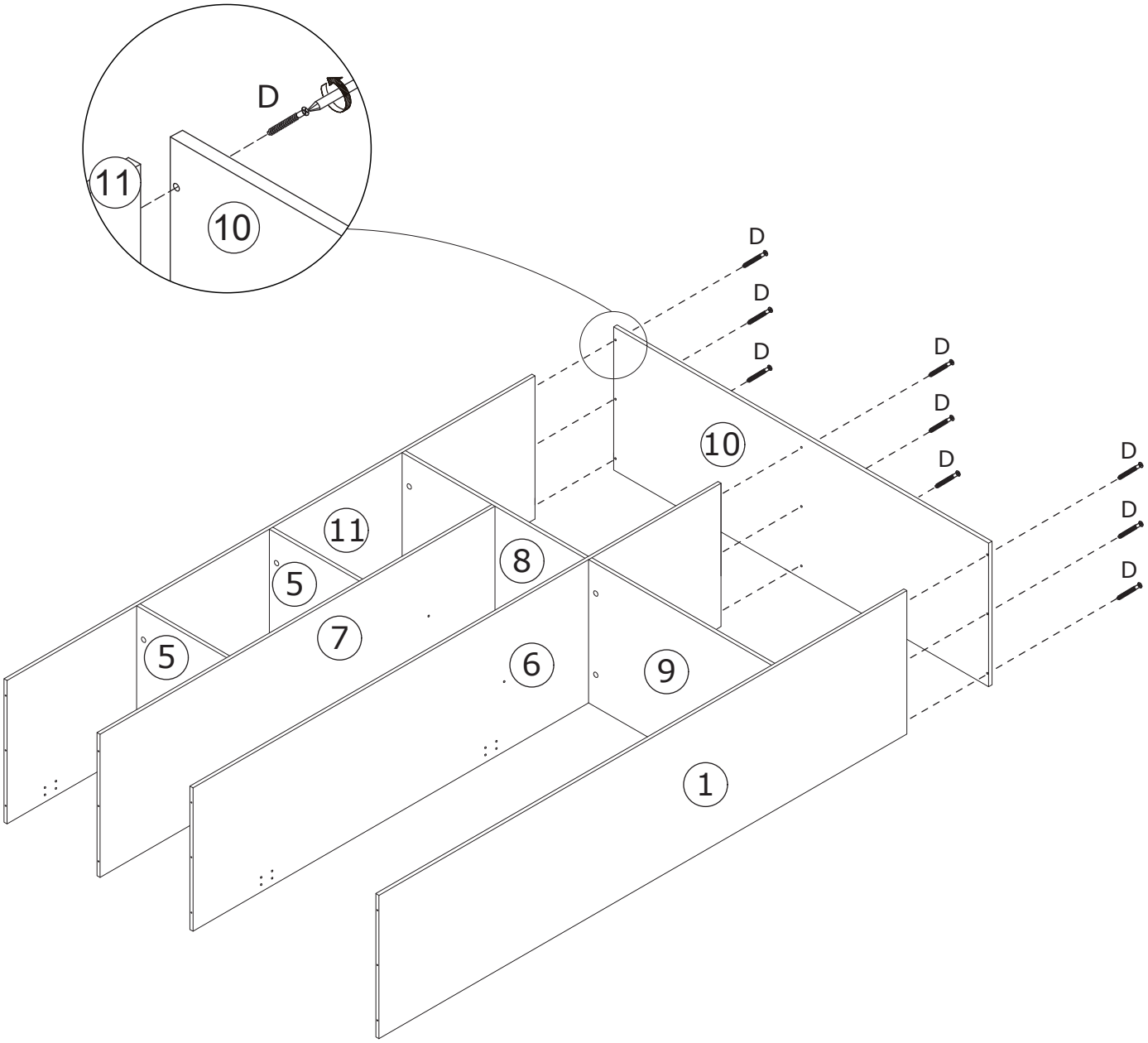

13

D x 12

CRC0540A

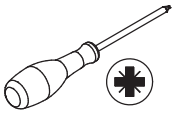

Fix plate 4 with plate 11,7,6 and 1 using screw(D) as shown.
Please pay attention where the holes are inserted.

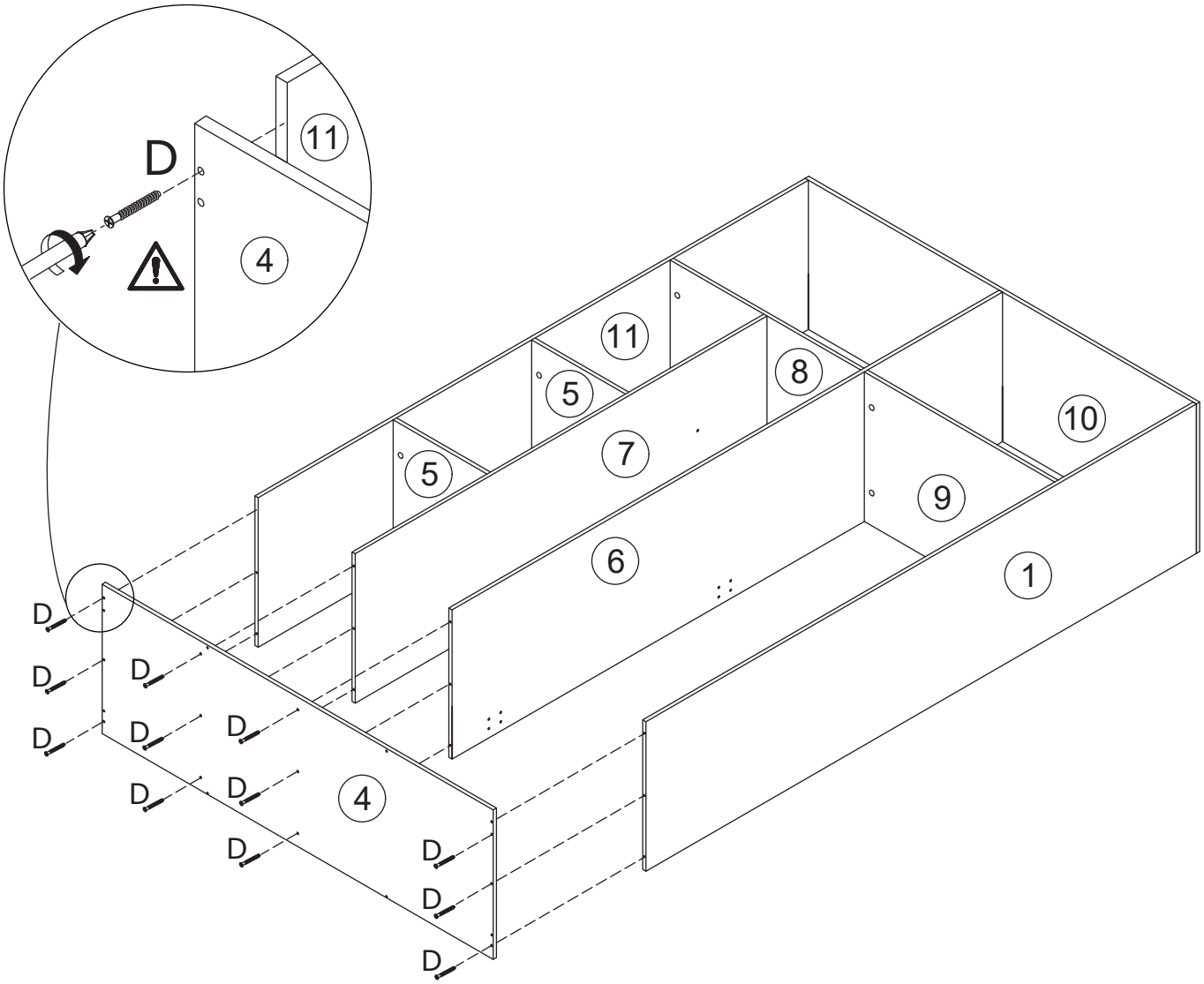

14

G x 8

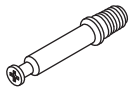

CRA0635A

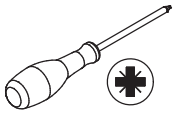

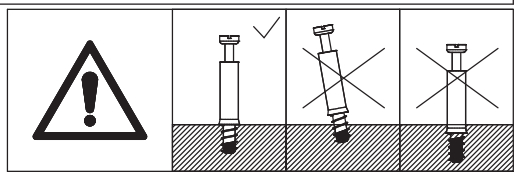

Insert eccentric rod(G) into corresponding holes in board 4 as shown.

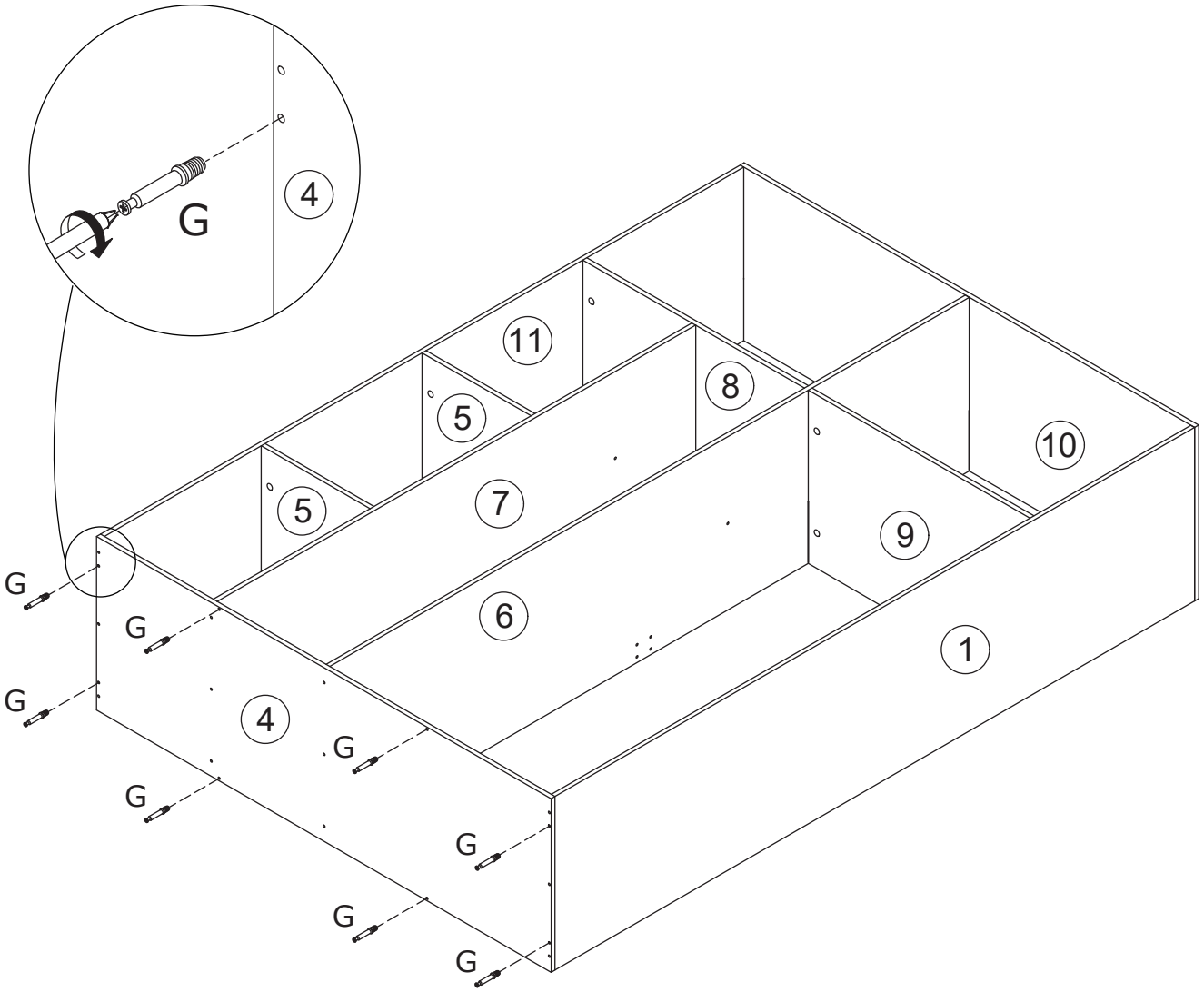

15

G x 8

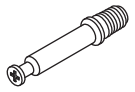

CRA0635A

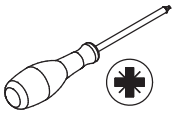

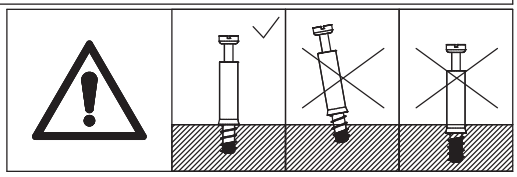

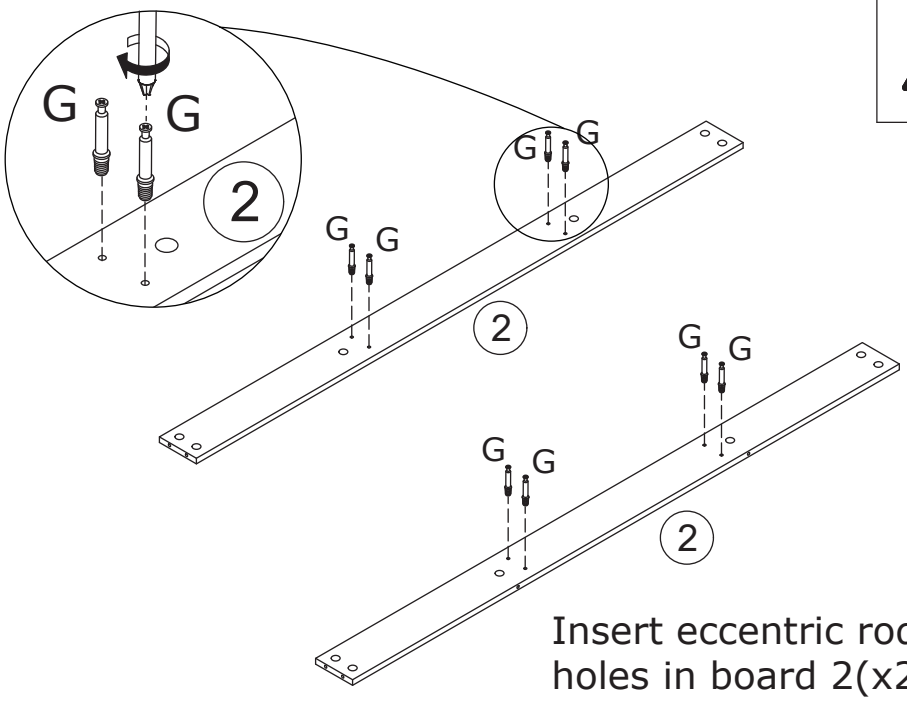

Insert eccentric rod(G) into corresponding holes in board 2(x2) as shown.

16

E x 8

CRB1595A

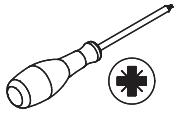

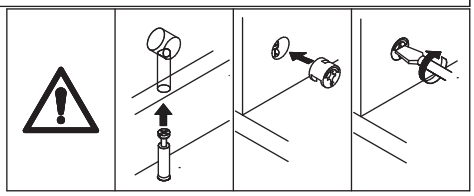

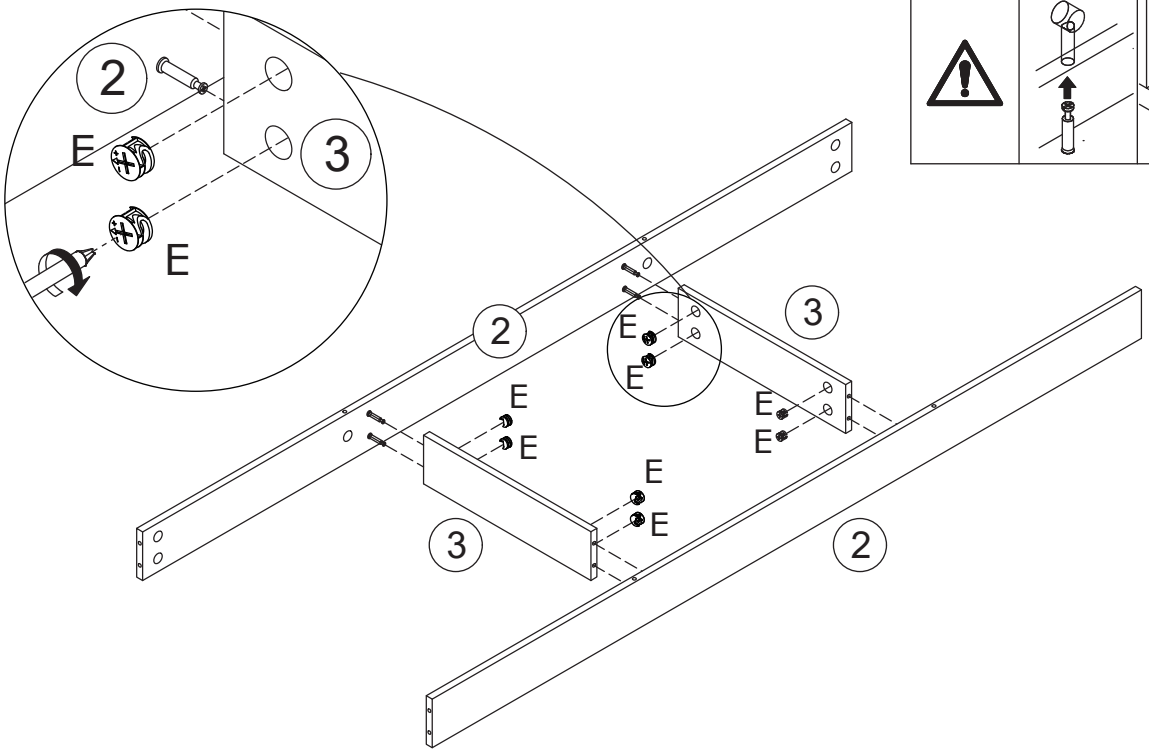

Connect plate 2 with plate 3, put cam locks(E) into holes in plate 3 and turn clockwise to tighten as shown.

17

G x 8

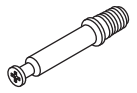

CRA0635A

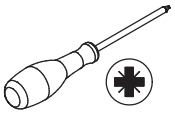

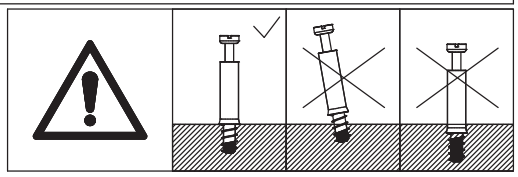

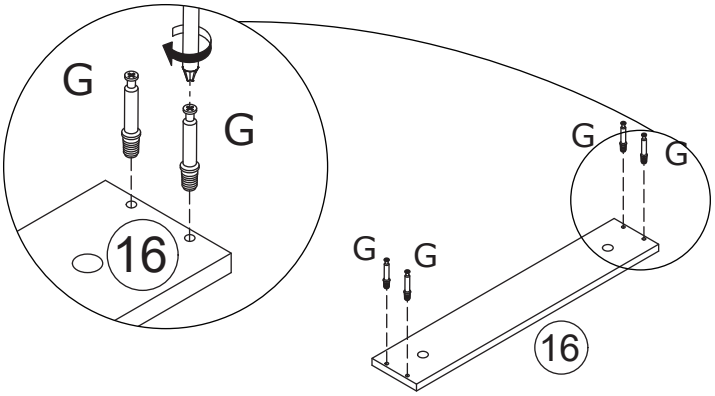

Insert eccentric rod(G) into board 16(x2) as shown.

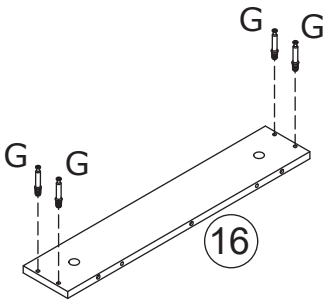

18

E x 8

CRB1595A

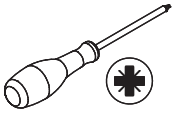

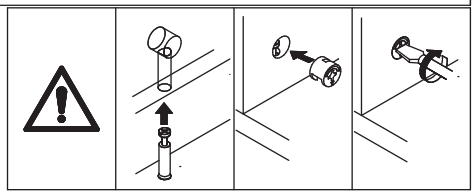

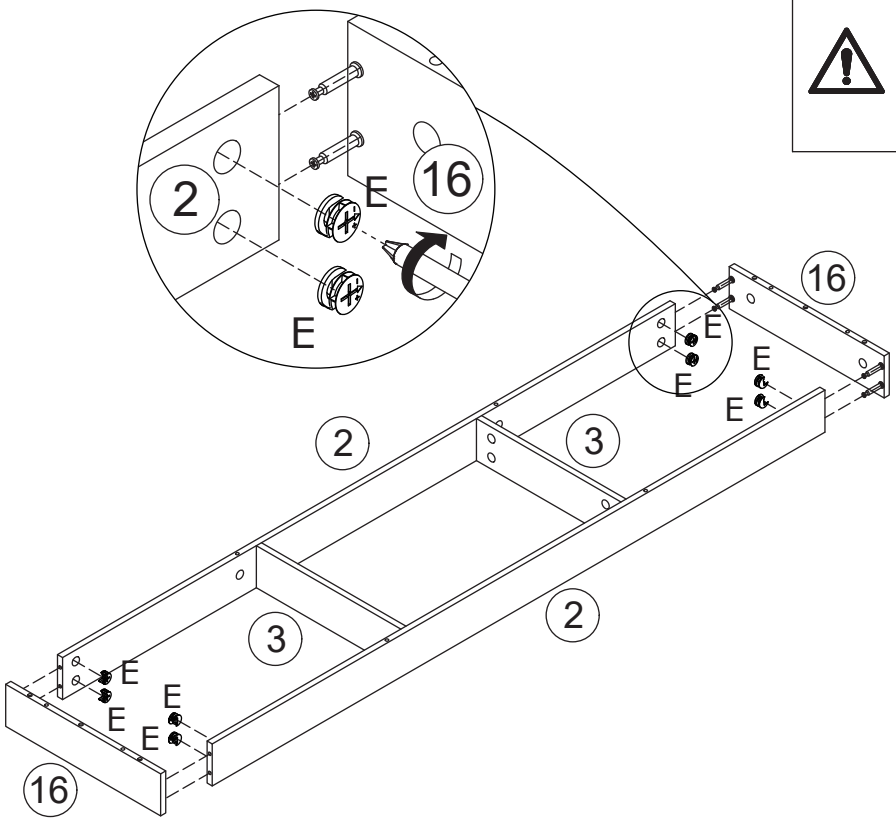

Attach board 16 to board 2, put cam locks(E) into holes in plate 2 and turn clockwise to tighten as shown.

19

E x 8

CRB1595A

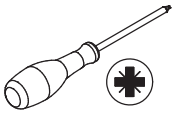

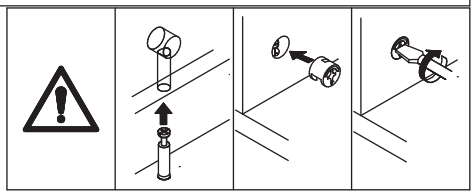

Attach the frame to plate 4, put cam locks(E) into holes in plate 2,16 and turn clockwise to tighten as shown.

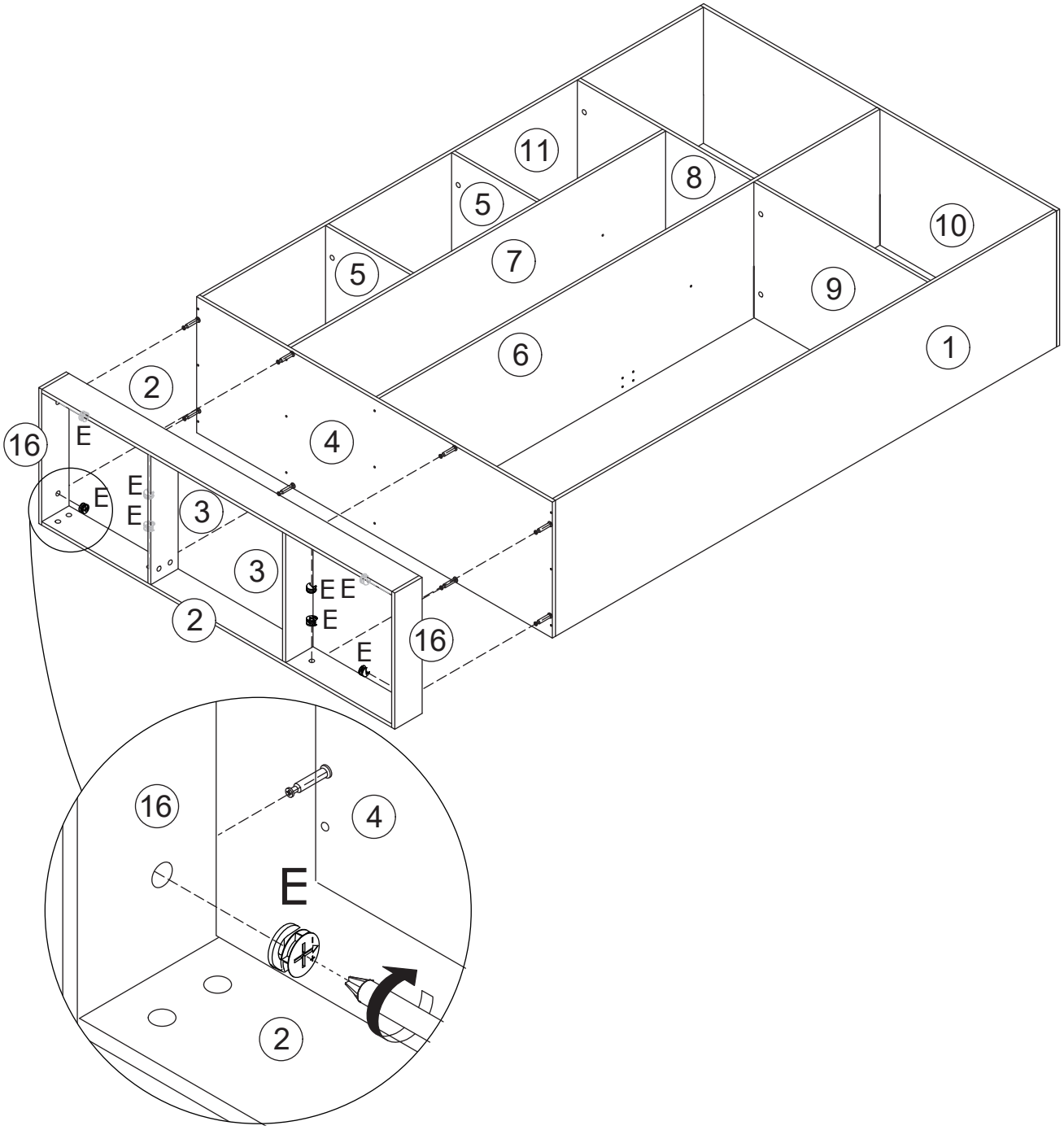

20

B x 71	L x 20	
∅2 x 16 mm		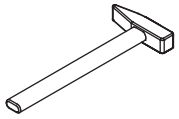

Connect board 14 and 17 with strip 15 as shown.
Fix back plate 13,14,17to the cabinet using nail(B) as shown.
Fix each plate 13,14 ,17together using part(L) with nail(B) as shown.

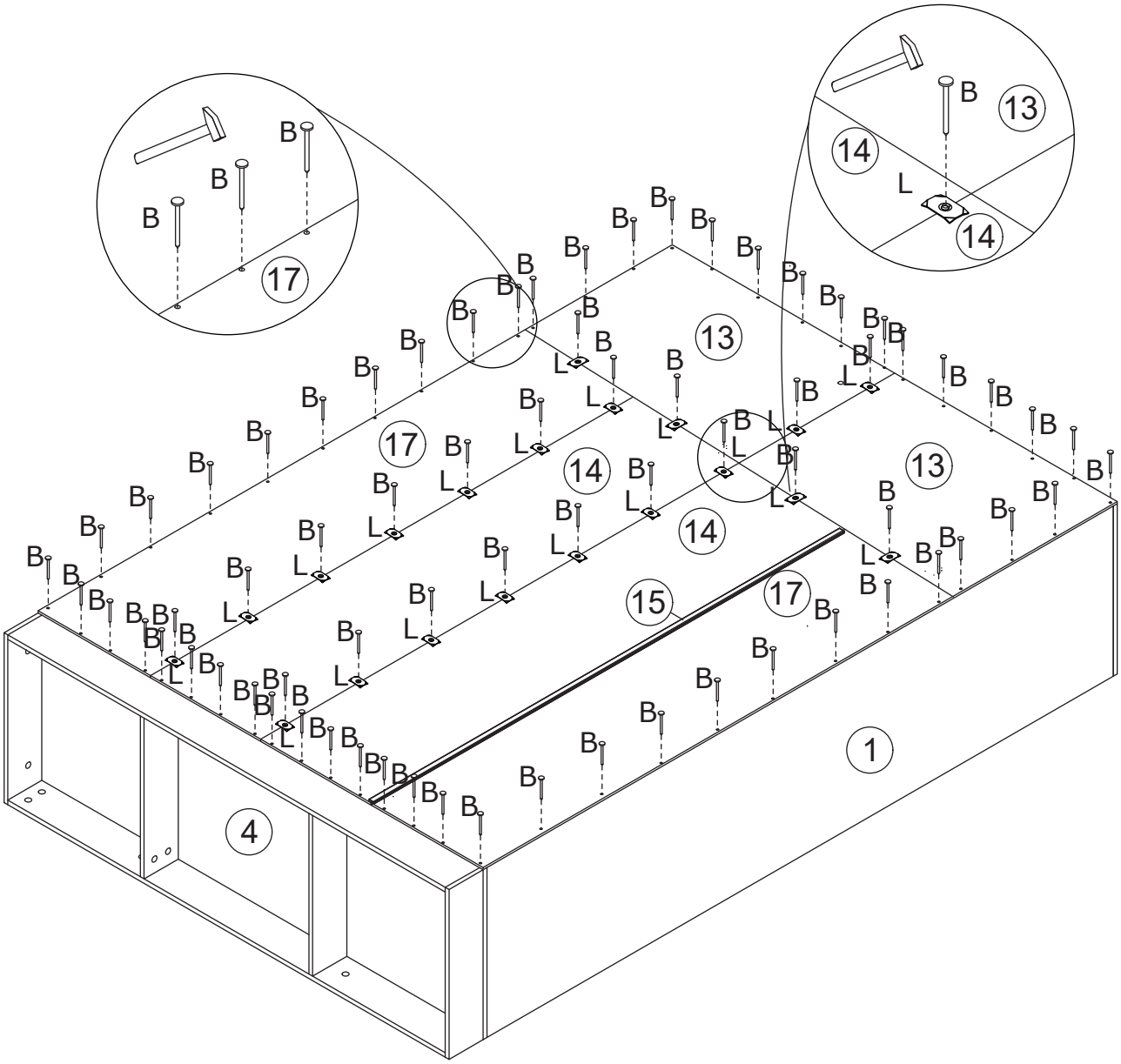

21

C x 4	P x 8	M x 1	K x 1	
	CRD3514A	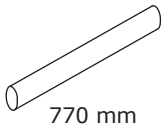 770 mm	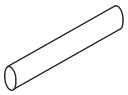 378 mm	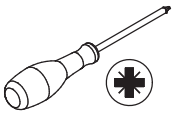

Fix part(C) to board 1,6 and 7 with screw(P) as shown.
Put the clothing rods(M&K).

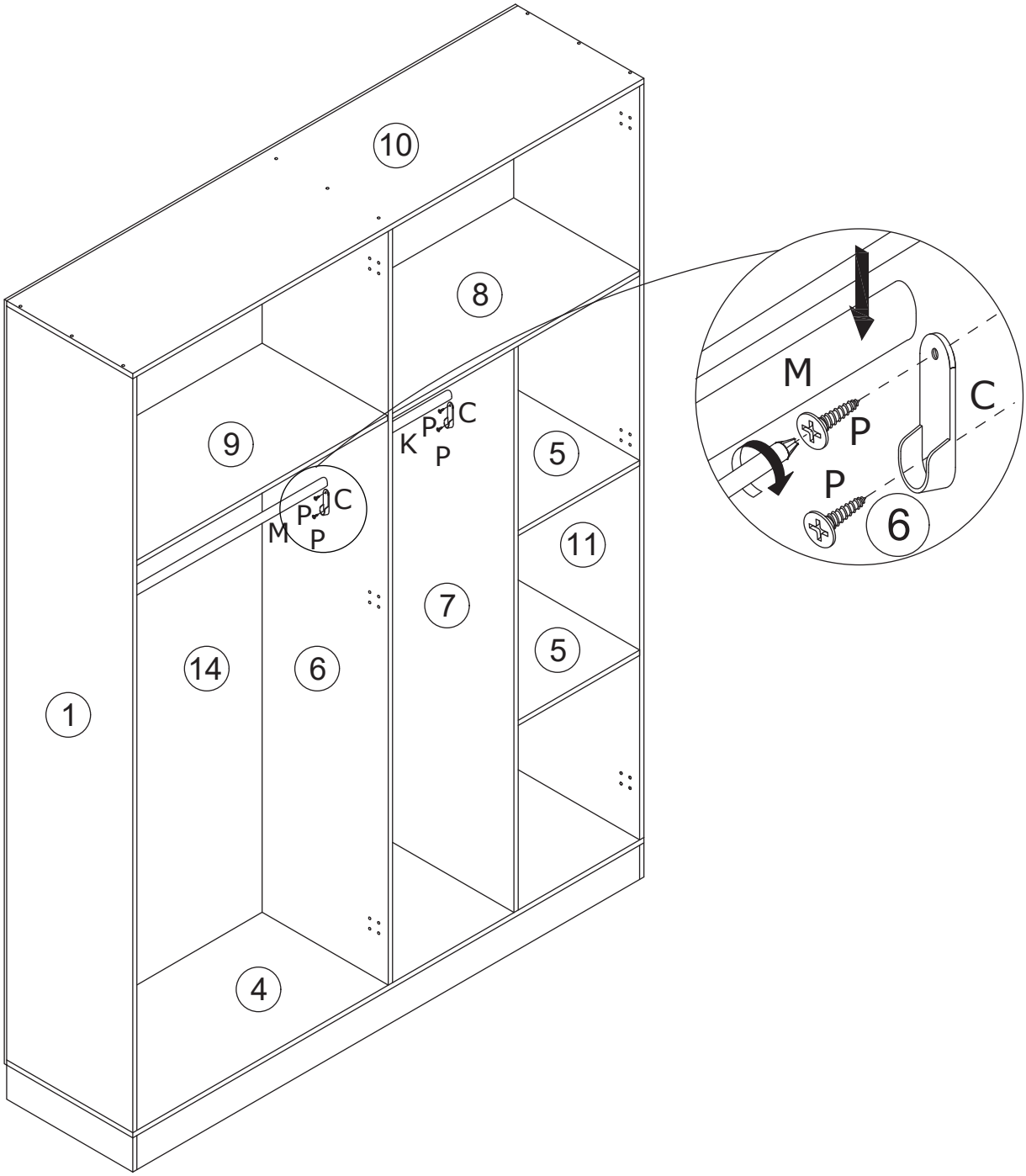

22

Please note, here are two different types of hinges.

The **full coverage door hinges(H)** are used on **outermost door panel**.

The **curved door hinges(I)** are used on the door panel in **the middle of** the cabinet.

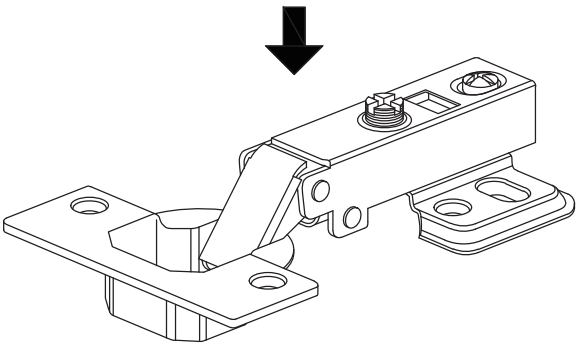

H

Full overlay hinge

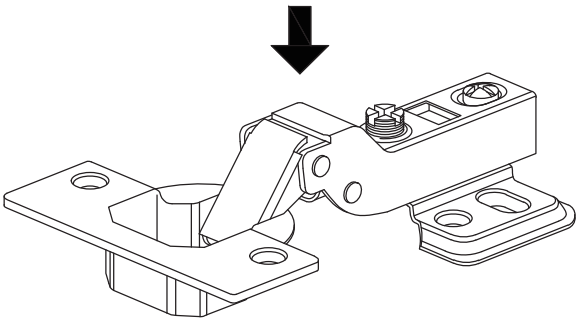

I

Half overlay hinge

23

A x 4	F x 12	I x 6	J x 2	
CRE0420A	CRD0416A	DGA861B	400 mm	

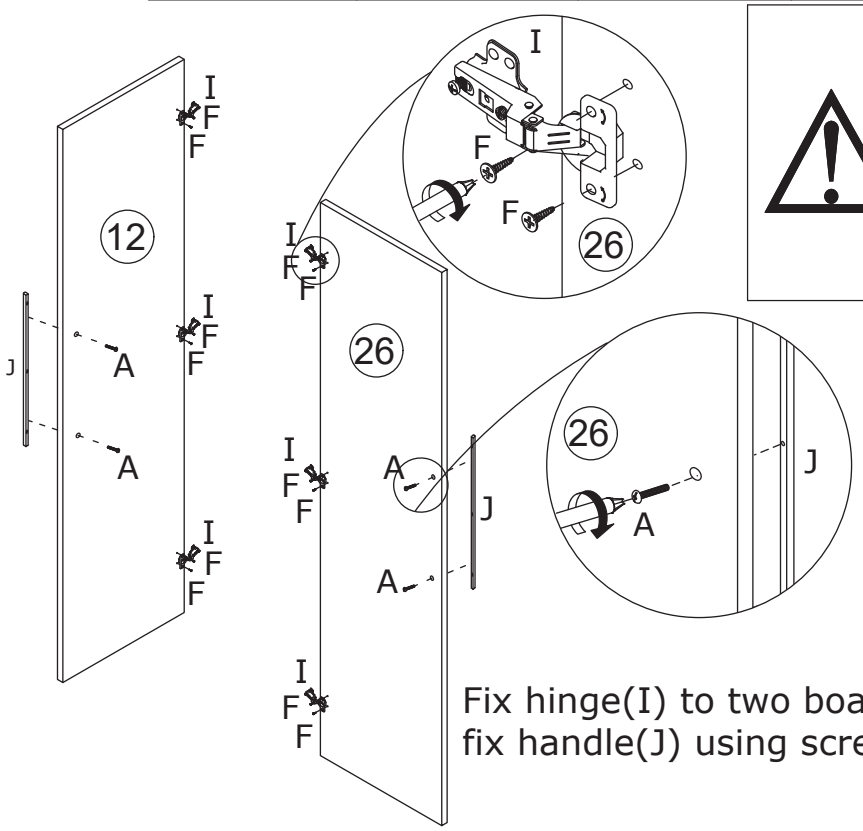

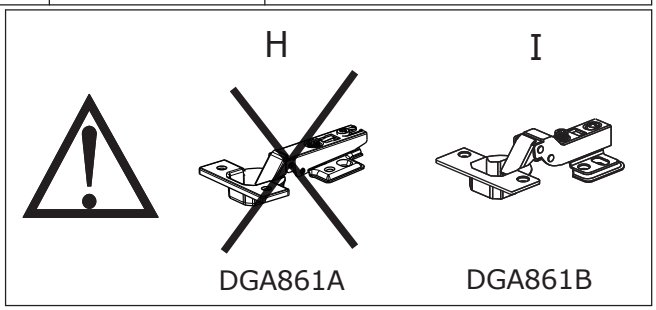

Fix hinge(I) to two board 12 and 26 using screw(F), fix handle(J) using screw(A) as shown.

24

F x 12	
CRD0416A	

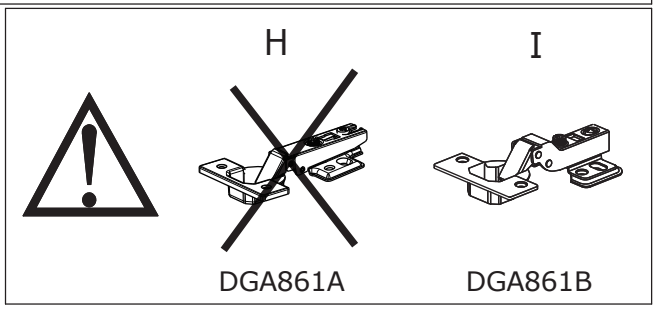

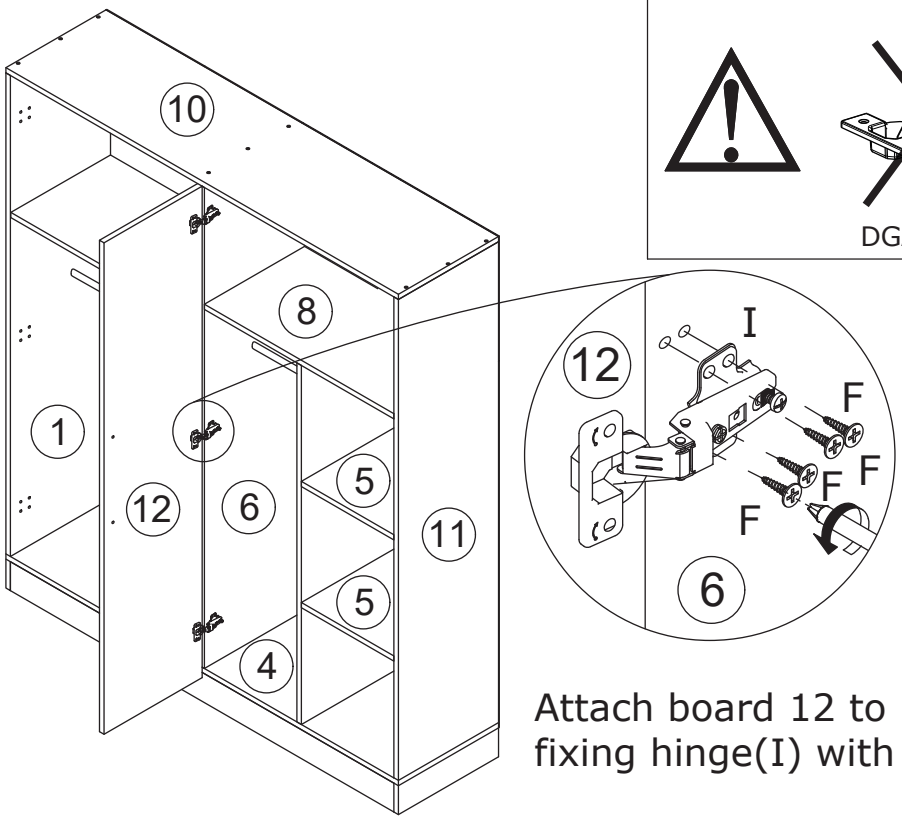

Attach board 12 to right of board 6 by fixing hinge(I) with screw(F) as shown.

25

F x 12
CRD0416A

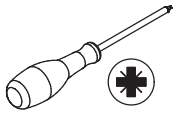

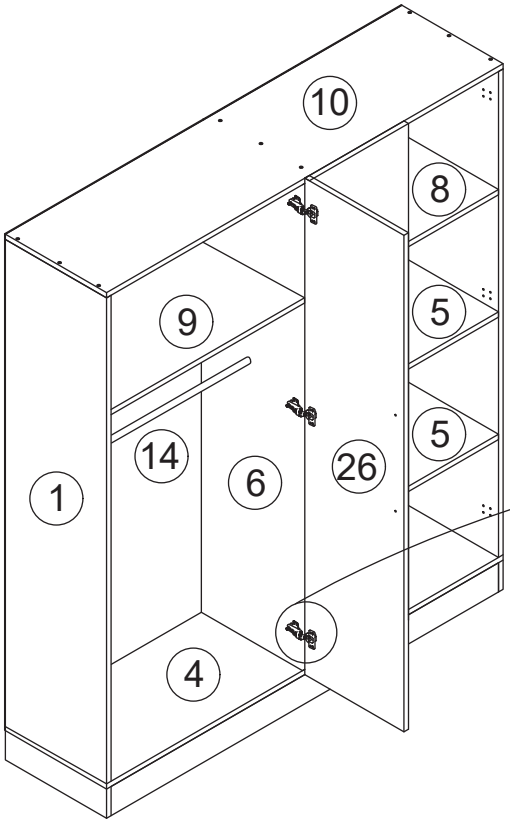

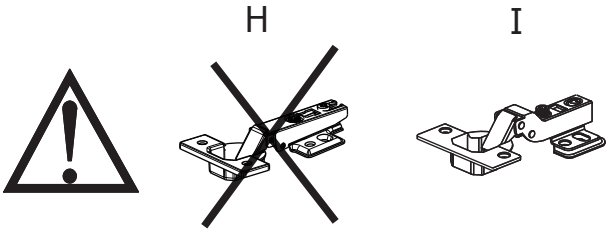

Attach board 26 to left of board 6 by fixing hinge(I) with screw(F) as shown.

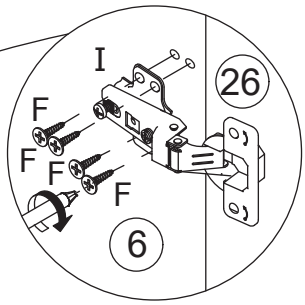

26

A x 4	F x 12	H x 6	J x 2	
			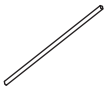	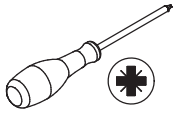
CRE0420A	CRD0416A	DGA861A	400 mm	

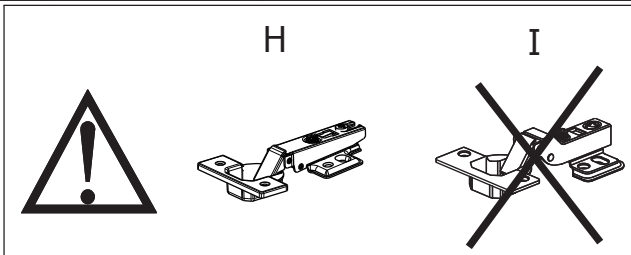

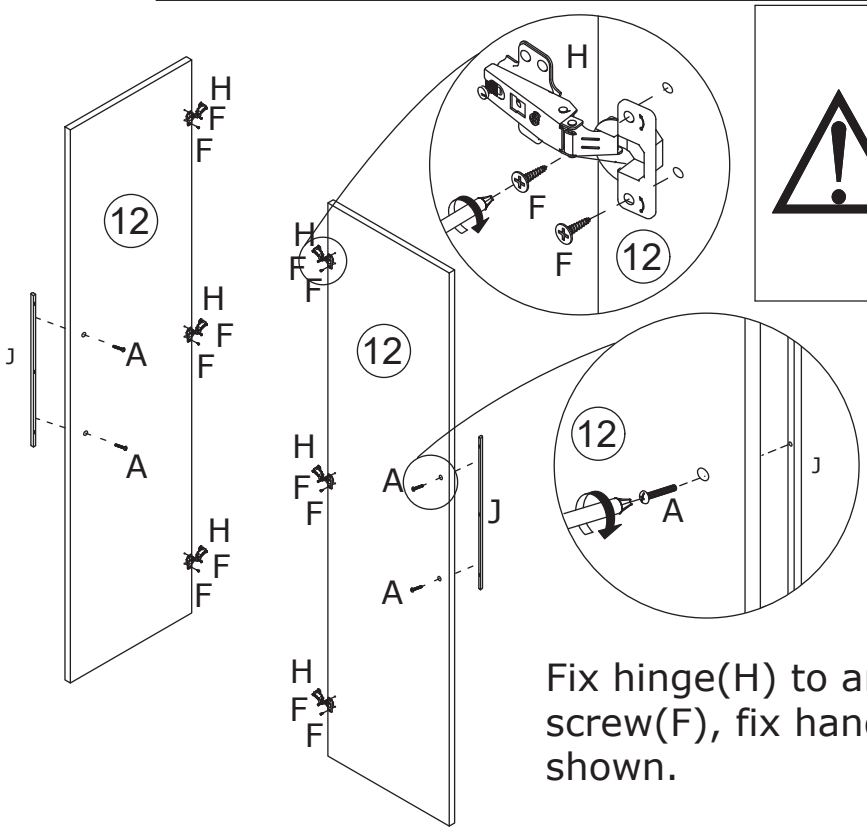

Fix hinge(H) to another two board 12 using screw(F), fix handle(J) using screw(A) as shown.

27

F x 24

CRD0416A

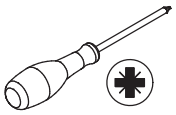

H

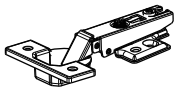

DGA861A

I

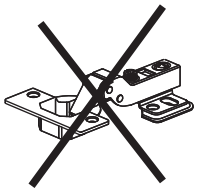

DGA861B

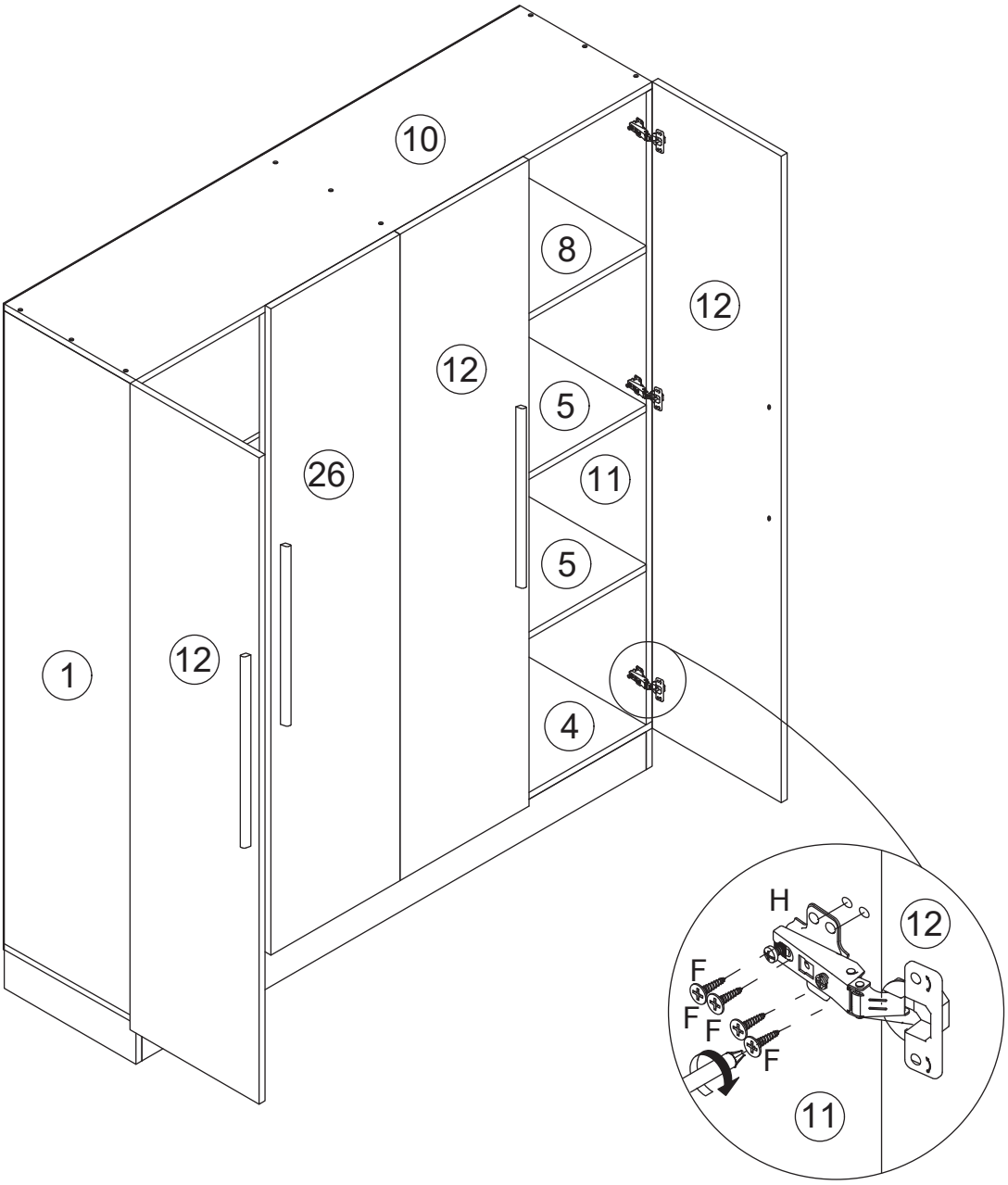

Attach another two board 12 to board 1 and 11 by fixing hinge(H) with screw(F) as shown.

28

N x 2

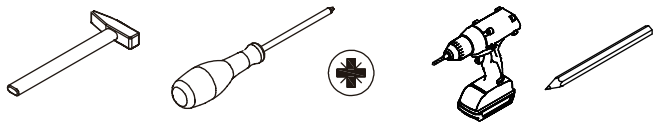

Install anti-dumping parts(N)
as shown.

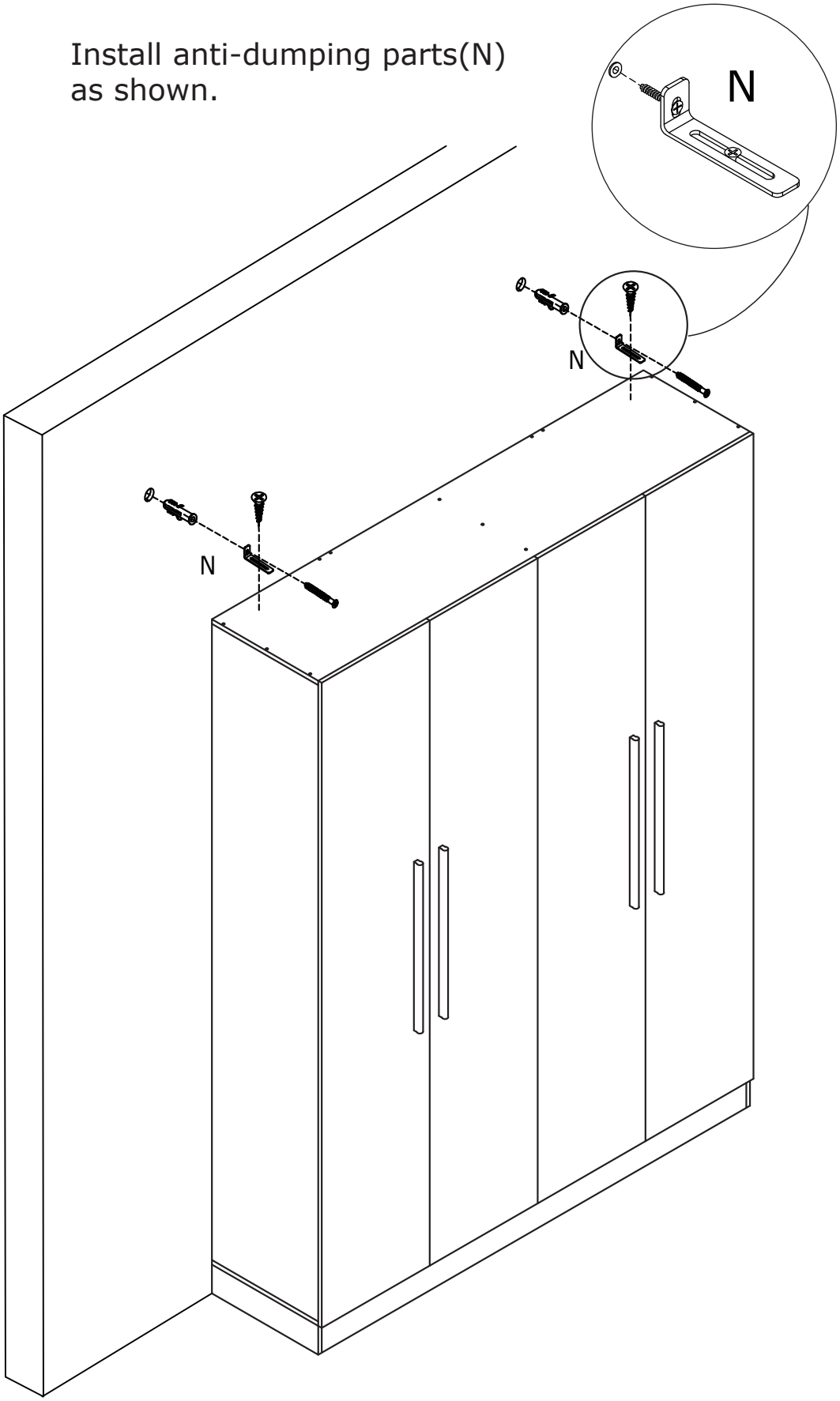

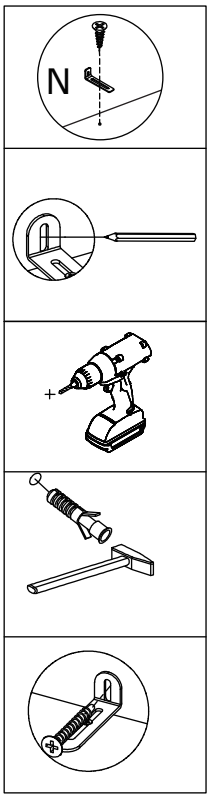

29

If doors are still not aligned if the hinges are properly correctly.

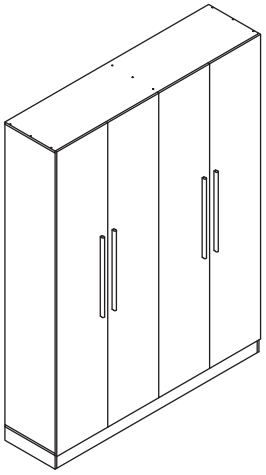

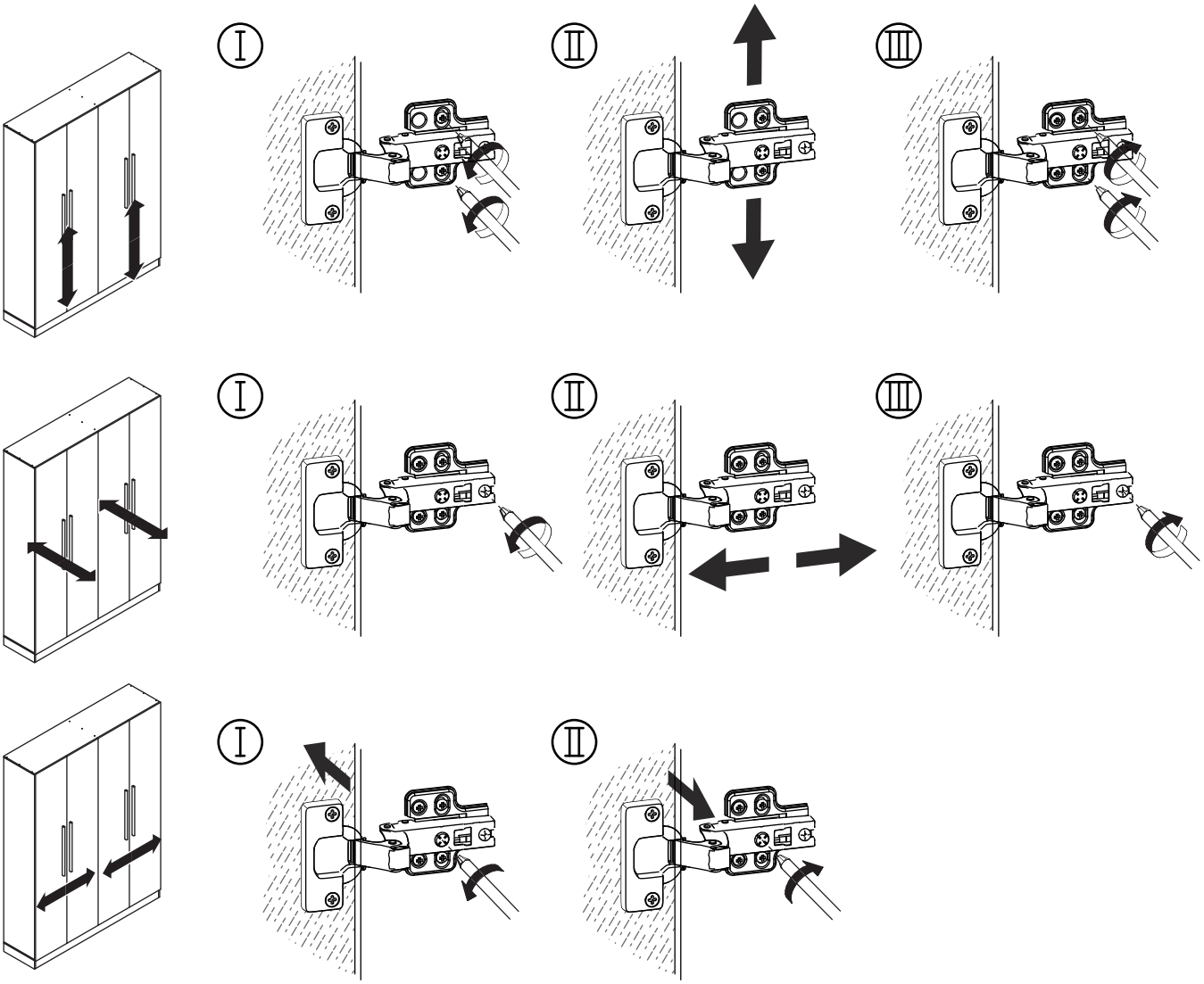

WARRANTY

WARRANTY CLAIMS

•There is a 30-day warranty for broken furniture or any other problems that do not work properly. The warranty will start from the date of purchase which must be verified by proof of purchase.

•Before making a claim, we may be able to answer your query, simply call us. Please leave your purchase order number, along with some details of the problem, if you want a replacement part. We will arrange within 48 hours. If there is out of stock, we will reply with a shipping date.

•The product must be used in accordance with the instructions provided. For health reasons.

•For other reasons, if the furniture needs to be returned, it must be cleaned and dried and operated within 30 days of receipt.

Type of Warranty Claim

•Failure to follow the furniture instructions will invalidate the warranty. Attention please.

•Does not include damage during installation, but includes damage during transportation.

Scope of responsibility

•Shall not bear any responsibility for misuse or user damage and / or loss of parts during the installation of furniture.

•After using, the damage and scratches of the furniture are not covered by the warranty.

The Warranty Relates to All Bought in The Us and Covers The Following Areas

•Sheet parts: 1 month from the date of purchase.

•Electrical parts: 1 month from the date of purchase.

RETURNS

CHANGED YOUR MIND AND NEED TO RETURN YOU ITEM?

PLEASE FOLLOW THE BELOW INSTRUCTIONS:

- If you have purchased and have simply changed your mind, follow the retailer's instructions for returns.

DEFECTIVE ITEMS

- If your item is defective in any way, i.e. it doesn't work but you can't identify why, in the first instance, please call us.

DAMAGED ITEMS

- If you receive an order with obvious shipping damage from the retailer, then we suggest the delivery is refused. If the delivery has been accepted and then shipping damage is found, please follow the specific instructions advised by the retailer.
  In all circumstances please save all packaging material and paperwork for the order. Please be aware that if you dispose of packaging material or attempt to return the merchandise without contacting the fulfiller, you jeopardise your chances of making a claim, and you may not receive a credit for the return.