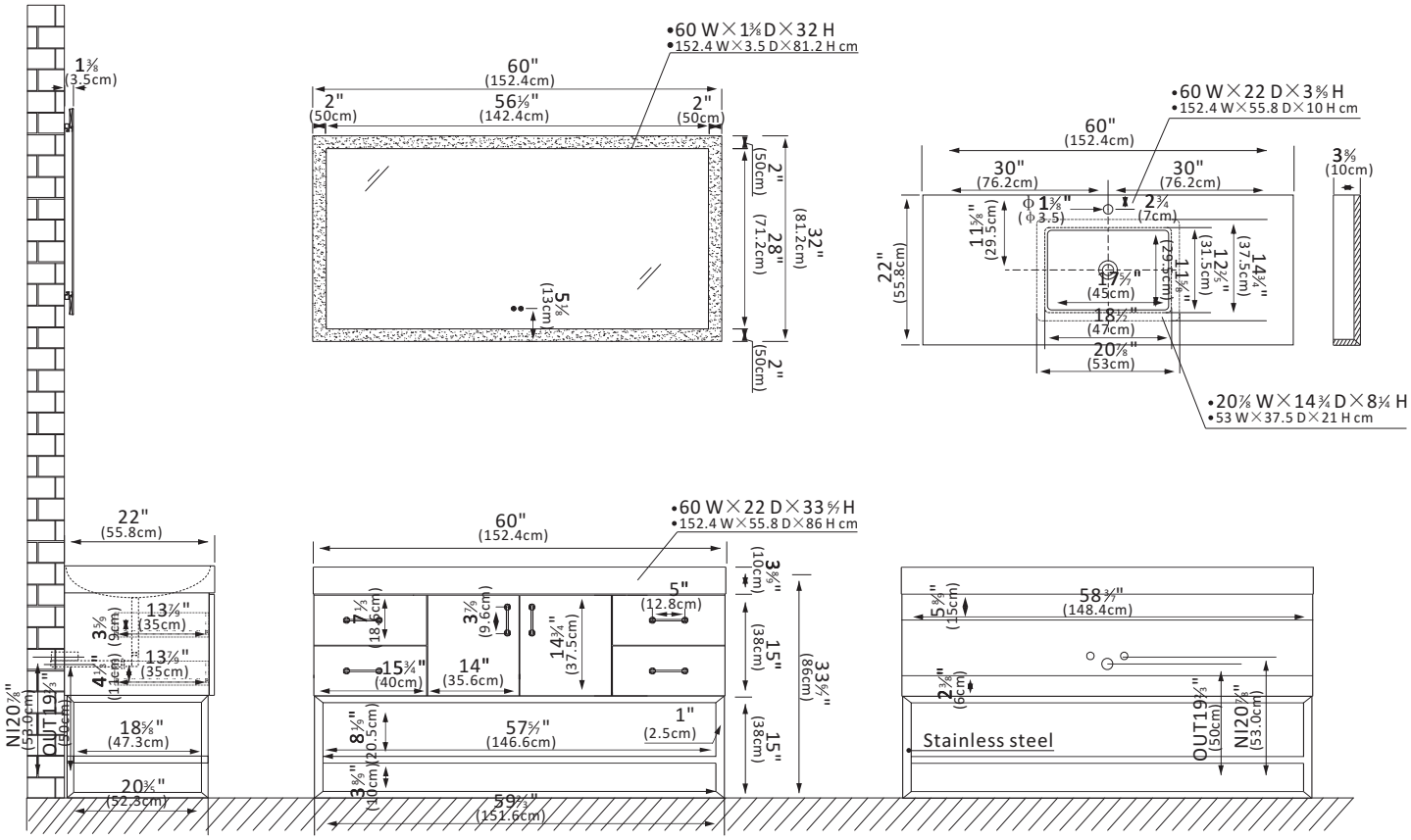

Features

●Durable Materials: Plywood and Crafted of PVC board which Waterproof, moisture-proof and ash layer for superior stability and durability.
●Stunning Finish: Available in North American Black Oak finish to complement your décor.
●Ample Storage Space: Two soft-closing doors and four sturdy, soft-closing drawers offer ample space for all your toiletries,which exclude the back panel.
●Modern Top: Single, 3.9"-thick, White Grain stone countertop lends a fresh and contemporary look. With a high-gloss, anti-fouling coating, the countertop is scratch-resistant, wear-resistant, and easy to clean.
●Nano-Coated Basin: Bright white Nano anti-fouling coating ceramic undermount sink with overflow blends seamlessly with the stone vanity top.
●Practical Functionality: Built-in UL-listed power and USB outlets offer a practical way to power beauty and grooming appliances.
●High-Quality Hardware: The Brushed Gold hardware and stainless steel metal bracket support base, as well as the open fixed shelf finish, create a sense of fashion and contrast.
●Matching Mirrors: Single, rectangular touch-sensor energy-efficient LED mirror coordinates perfectly with vanity.
●Faucet Type: Countertop has a pre-drilled, standard 1-3/8" faucet hole.
●Accessories: Does not include faucet, drain assembly or P-trap,backsplash and Storage Cabinet. Comes fully assembled and ready to install in your bathroom.
●No Installation Required: Freestanding bathroom vanity comes fully assembled for your convenience.Designed for easy, no-hassle plumbing and faucet installation.
●Full Warranty: 1-Year Manufacturer Warranty—purchase with 100% peace of mind.