ASSEMBLY INSTRUCTIONS.

DALA SIDE TABLE

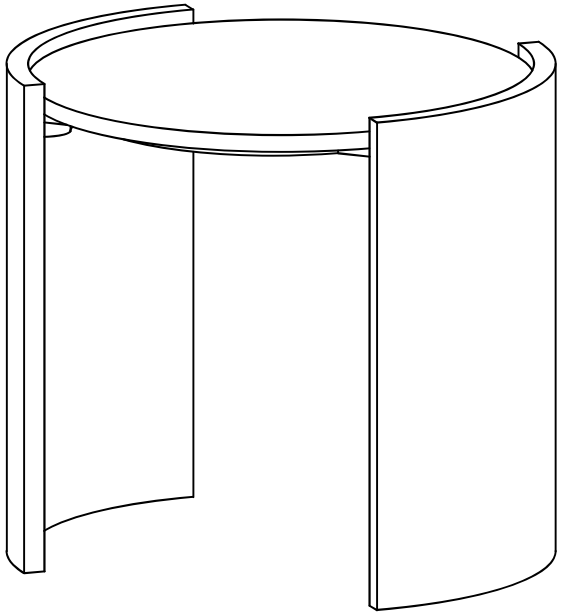

THANK YOU FOR YOUR PURCHASE!

PARTS AND HARDWARE.

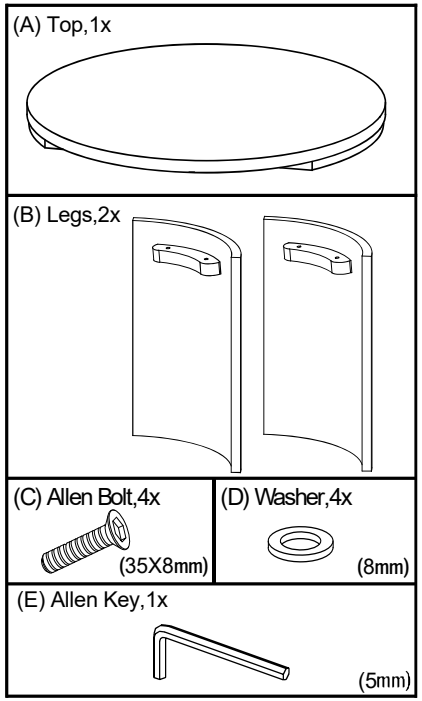

NOTES.

Thank you for purchasing this quality product! Be sure to check all packing material carefully for small part that may have come loose inside the carton during shipping.

CAUTION: The item is heavy, assembly should be performed by two people.

STEP 1.

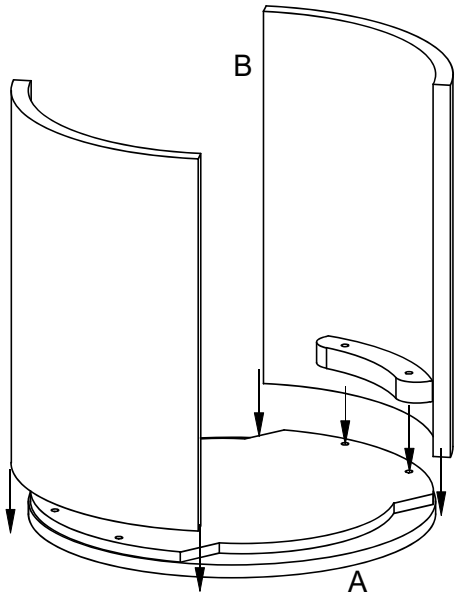

STEP 2.

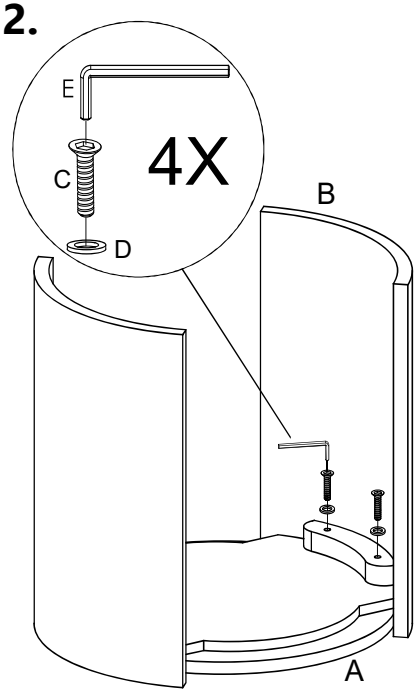

STEP 3.

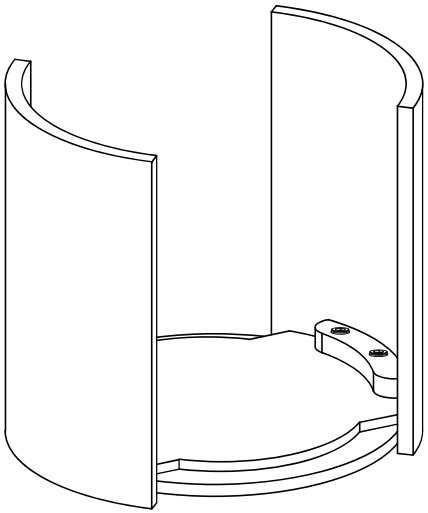
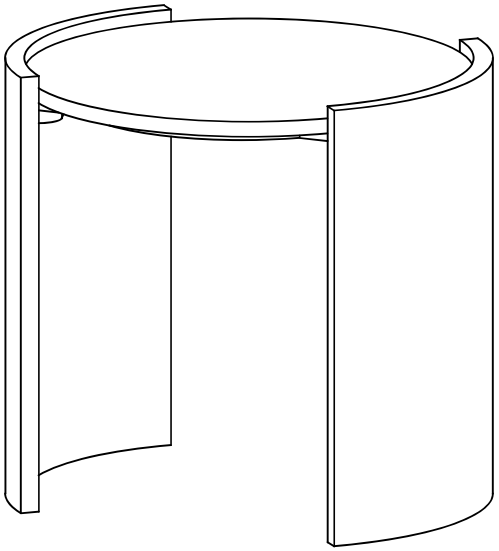
STEP 4.