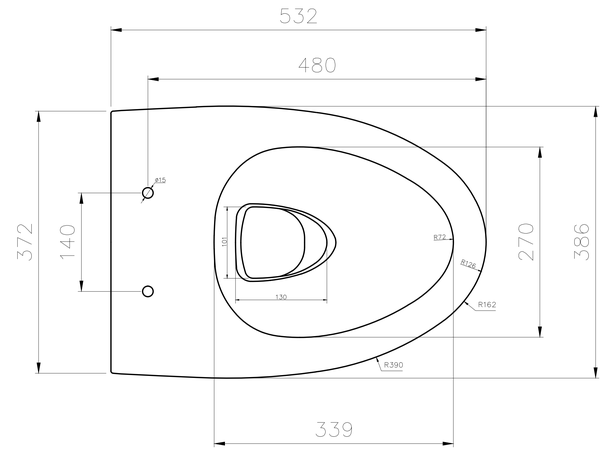

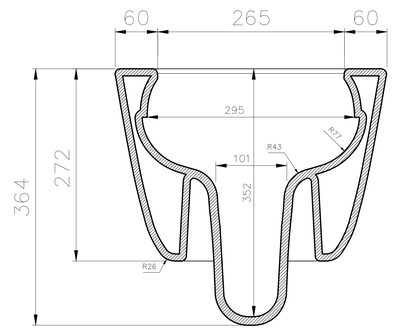

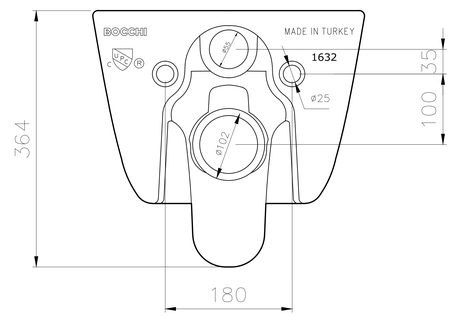

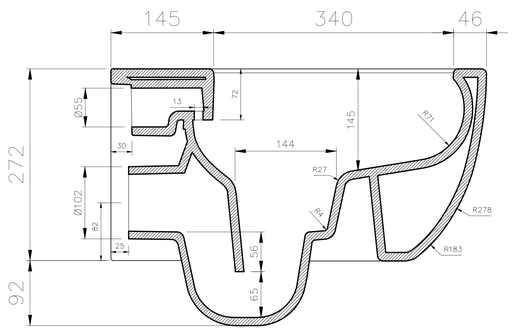

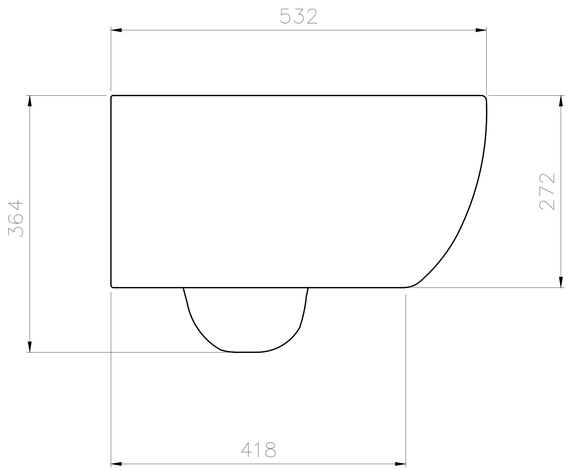

Created by COSKUN - DEDE	Tolerance		Replaces Document
Company SANIKEY	Product ELONGATED WALL HANG TOILET		Product no 1632
			Created Date 30.09.2022 / Scale 1/1
	Product name 1632		Document Number 004