PSSSB2202 WIRE GRID

Cat. No.

PSSSB2202-WIRE

BARCLAY

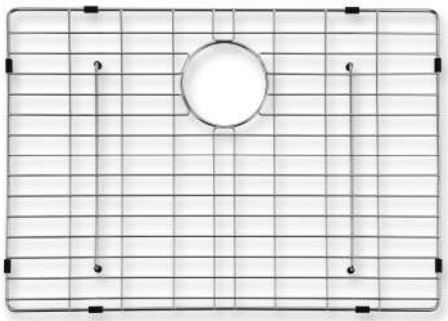

Features:

►Fits bottom of PSSSB2202 farmer sink
►Rubber Feet Covers Included

Finishes:

SS Stainless Steel

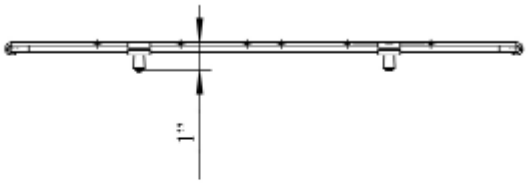

W: 17-⅝"
D: 12-⅝"
H: 1"

Drain Hole :4-¾"

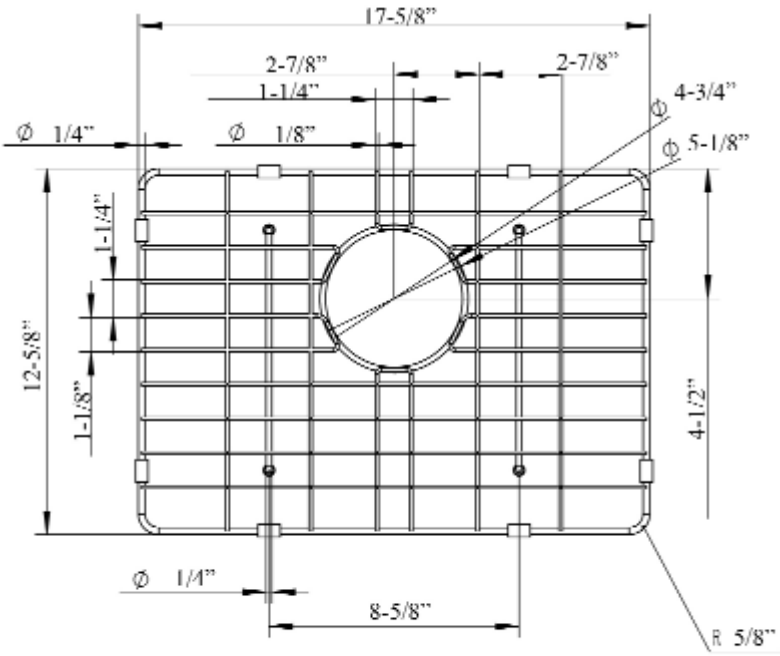

Dimensions and specifications subject to change without notice.

P 847-244-1234 | www.barclayproducts.com