Installation & Assembly

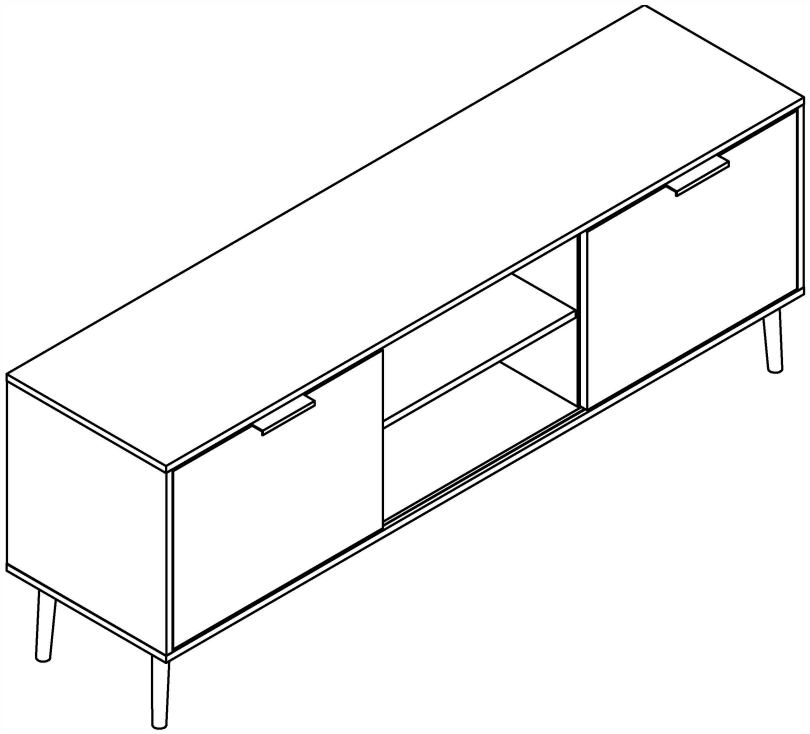

For the convenience and neatness of reading the manual, the door panel here is displayed using a simple drawing method.

YOU MAY NEED (NOT SUPPLY)

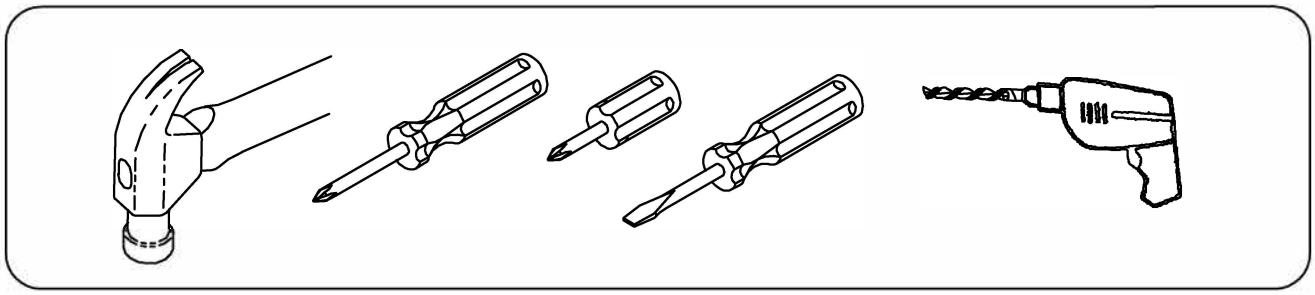

General Guidelines

- Please read the following instruction carefully and use the product accordingly.
- Please keep this manual and hand it over when you transfer the product.
- This summary may not include every detail of all variations and considered steps. Please contact us when further information and help are needed.

Notes

- The item is only intended for home use. Any uses that do not match the above description or unauthorized changes and modification are not permitted. Otherwise, it may result in personal injury or breakage of the product. The product must be assembled and used strictly in accordance with the provisions of the manual. The seller does not assume any responsibility or liability with respect to any damage caused by incorrect assembly or improper use.
- It is recommended to assemble it by 2 adults. Please read instructions carefully and assemble the item according to the instruction.
- Please check parts first after unpacking. If there are defective, broken or missing parts, please do not hesitate to contact.
- Please assemble the item in spacious room and do not place the unwrapped product directly on the ground.
- It is recommended to wear gloves in the assembly to avoid scratches by the sharp edges.
- Do not stand or sit on the wooden boards before the assembly.
- Please match the corresponding board and fitting based on the part number in the manual.
- If the board does not match with the fitting, please check the pieces as specified in this manual.
- Please refer to the diagram during assembly. Align all the screws with the related pre-drilled holes first and later tighten the screws one by one after putting all the parts in the correct places.
- Please remove all items on the product before moving.
- Two people are required to move the product as the item should be lifted off the ground. Please do not drag it along the floor as it may damage your floor.
- Do not expose the product to direct sunlight or rain. Do not put it in a humid place. Failure to do so may accelerate the distortion, discoloration or crack. Do not leave sharp objects.
- Do not pour corrosive chemicals on the surface of the board.
- For daily care, please clean with a damp cloth and wipe dry immediately

Warnings

- It is not intended for use by children under 3 years of age. Children must be under adult supervision to use the product.
- Children are not allowed to climb or play on the item to avoid toppling over which may cause serious or fatal injury.
- During the assembly process, keep small parts out of the reach of children. It may be fatal
if small parts are swallowed or inhaled.
- To avoid the potential dangers of suffocation, please keep all parts and packaging (films, plastic bags and foam,etc.) away from babies and children

ASSENBLY DIAGRAM

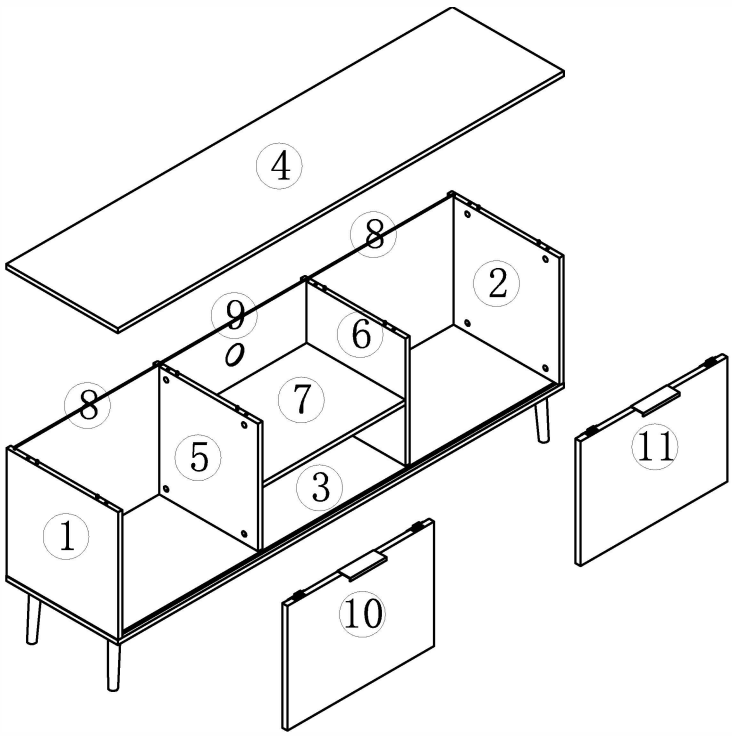

PARTS LIST

PARTS LIST

NO	DESCRIPTION	QTY	NO	DESCRIPTION	QTY
1	Left side panel	1	7	Partition panel	1
2	Right side panel	1	8	Back panel	2
3	Bottom panel	1	9	Back panel	1
4	Top panel	1	10	Left door panel	1
5	Middle side panel	1	11	Right door panel	1
6	Middle side panel	1			

PARTS LIST

HARDWARE LIST

NO	DESCRIPTION	QTY	NO	DESCRIPTION	QTY
A	Three-in-one eccentric wheel	20	F	wooden foot	1
B	Three-in-one connecting rod	20	G	wooden foot	4
C	Three-in-one sticker	20	H	upper wheels of the sliding door	4
D	8*40mm wood dowel pins	20	I	lower wheels of the sliding door	4
E	4*14mm screw	32			

CAUTION:

Please confirm the parts list before installation

STEP 1

HARDWARE LIST	
Three-in-one connecting rod B 20PCS	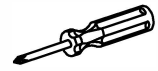

1.Put the three-in-one connecting rod in the 10mm hole of the following panels and tighten them with a cross screwdriver or an electric tool.

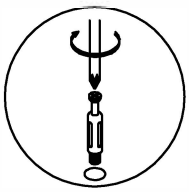

STEP 2

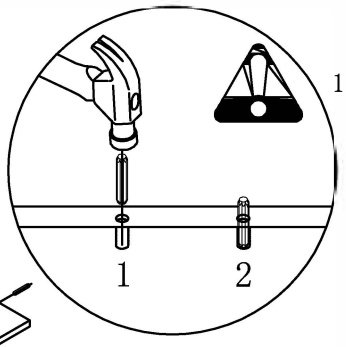

1.Strike the 08*40mm wood dowel pin into the 8mm hole of the above panels with an iron hammer. Please note that the hole of the three-in-one connecting rod should also be 8mm. The hole of the three-in-one connecting rod connects to the hole of 15mm three-in-one eccentric wheel.

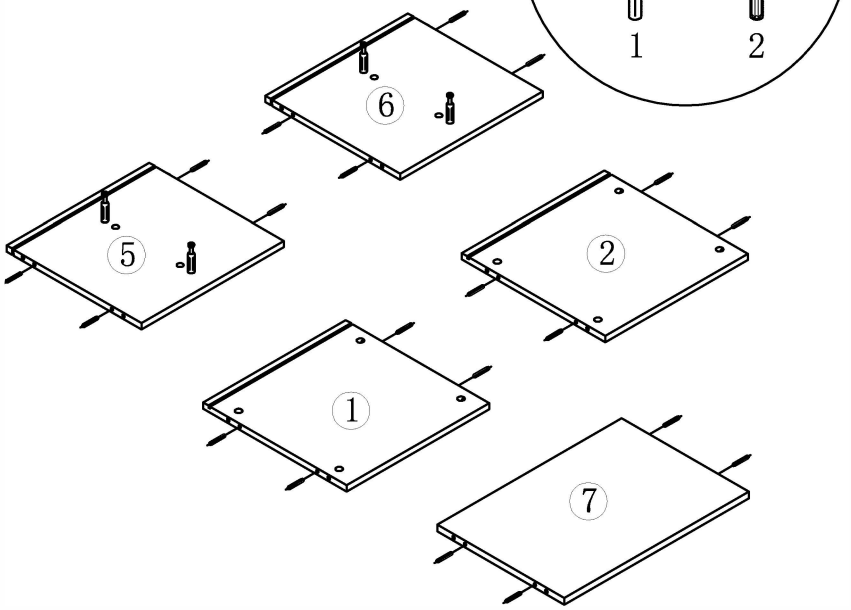

HARDWARE LIST	
8*40mm wood dowel pins D 20PCS	

STEP 3

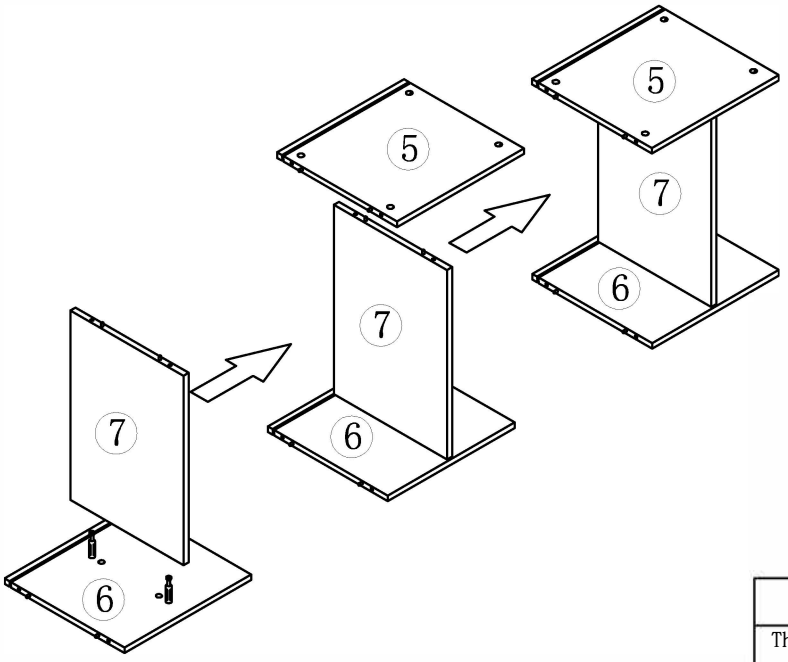

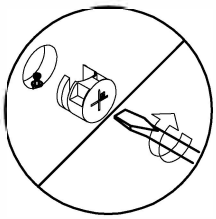

1.Connect No. 5-7 panel to No.6 panel tightly with the three-in-one eccentric wheel.

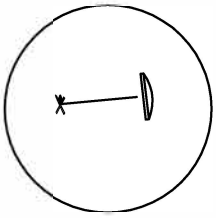

2.Cover the mounting hole of the eccentric wheel with a three-in-one sticker.

HARDWARE LIST		
Three-in-one eccentric wheel A 4PCS	Three-in-one sticker C 4PCS	

STEP 4

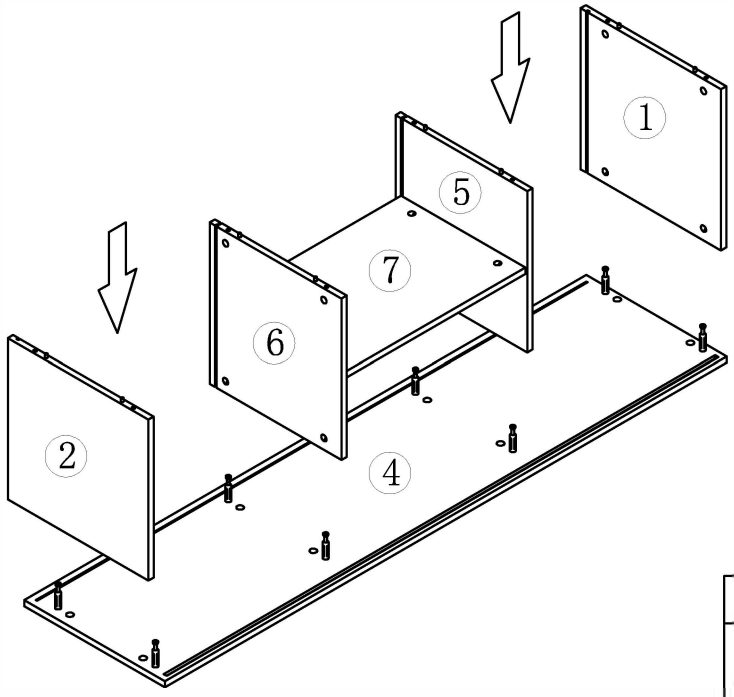

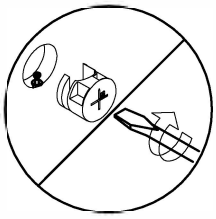

1.Connect No. 1-2-5-6 panel to No.4 panel tightly with the three-in-one eccentric wheel.

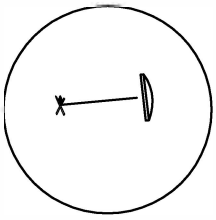

2.Cover the mounting hole of the eccentric wheel with a three-in-one sticker.

HARDWARE LIST		
Three-in-one eccentric wheel A 8PCS	Three-in-one sticker C 8PCS	

STEP 5

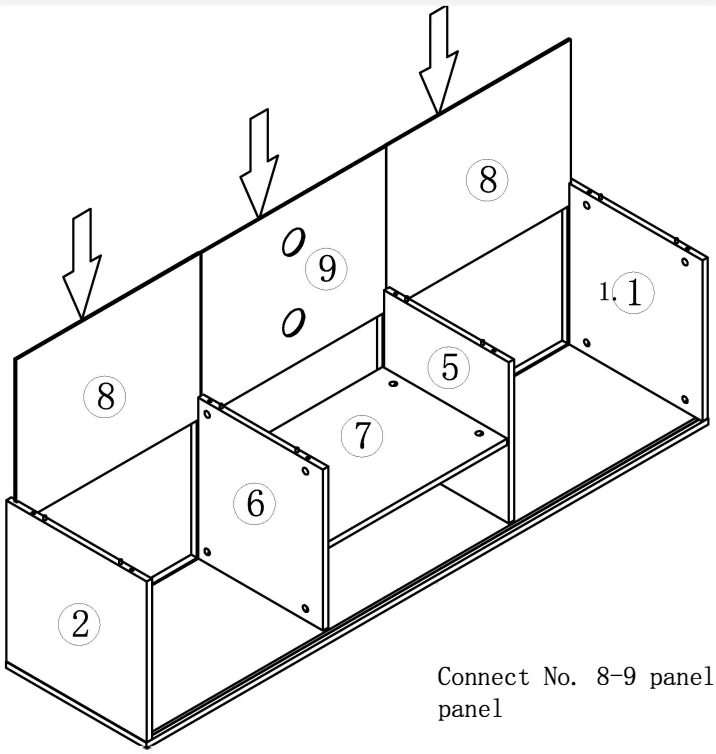

Connect No. 8-9 panel to No.1-2-5-6 panel

STEP 6

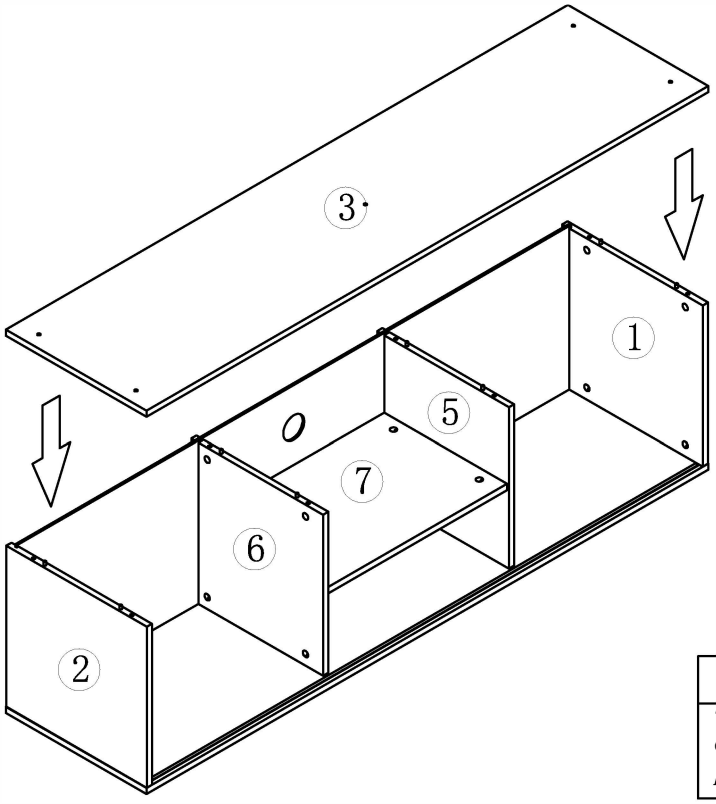

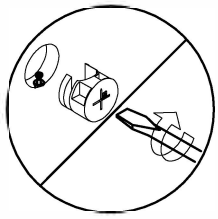

1.Connect No.3 panel to No.1-2-5-6 panel tightly with the three-in-one eccentric wheel.

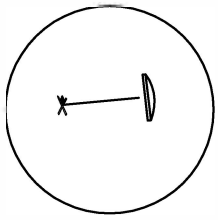

2.Cover the mounting hole of the eccentric wheel with a three-in-one sticker.

HARDWARE LIST		
Three-in-one eccentric wheel A 8PCS	Three-in-one sticker C 8PCS	

STEP 7

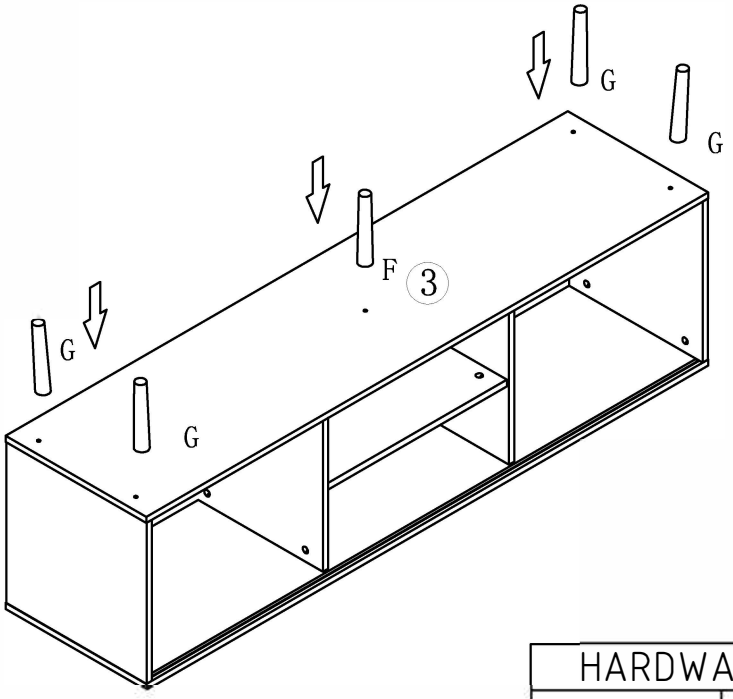

Fix the wooden foot on the 3 panel

HARDWARE LIST		
wooden foot F 1PCS	wooden foot G 4PCS	

STEP 8

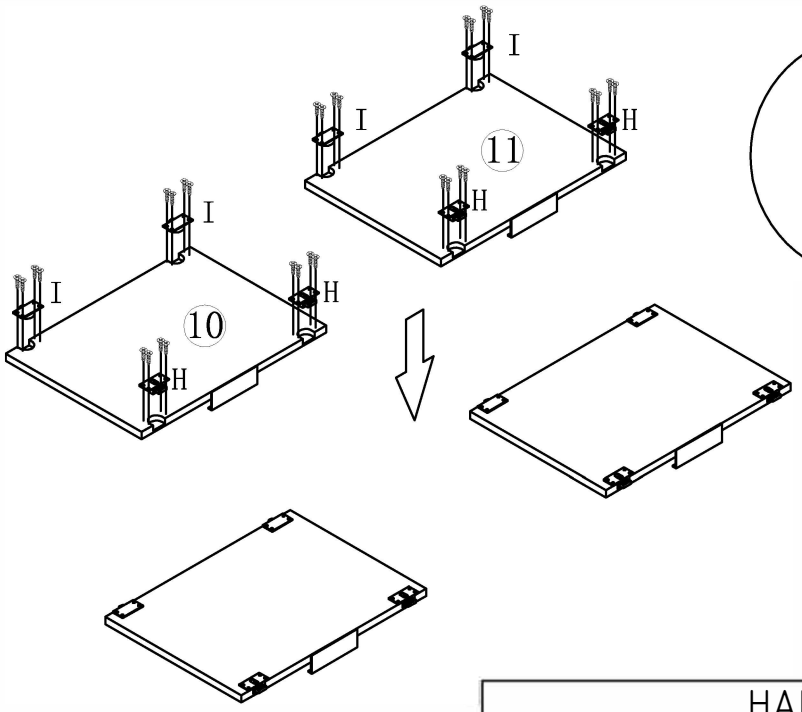

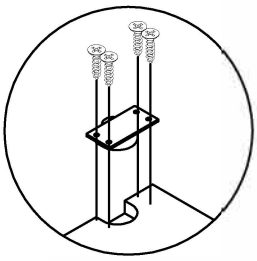

I

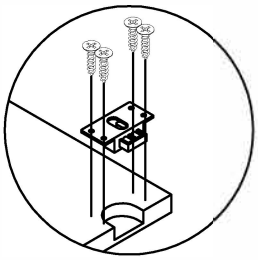

H

1. Use 4*14 screws to fix the upper and lower wheels of the sliding door.

HARDWARE LIST			
4*14mm screw E 32PCS	upper wheels of the sliding door H 4PCS	lower wheels of the sliding door I 4PCS	

STEP 9

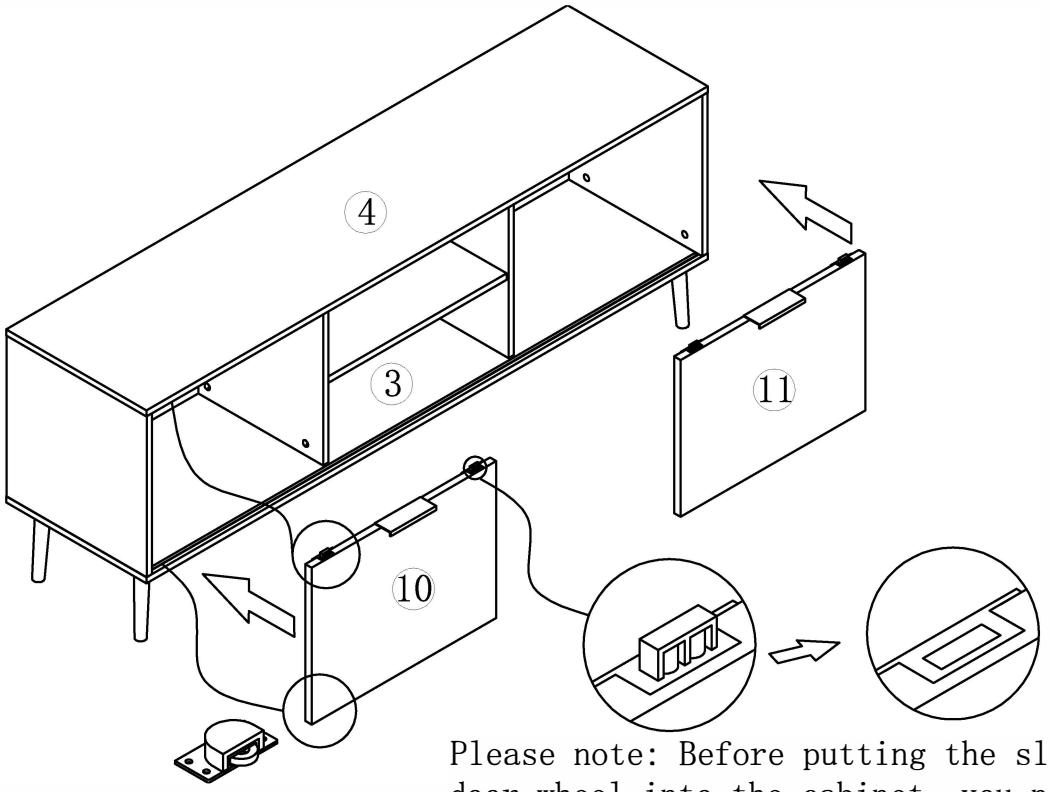

Please note: Before putting the sliding door wheel into the cabinet, you need to press the control switch in the middle of the sliding door wheel.

Put the lower wheels of the sliding door into the 3 panel and then put the upper wheels of the sliding door on the 4 panel

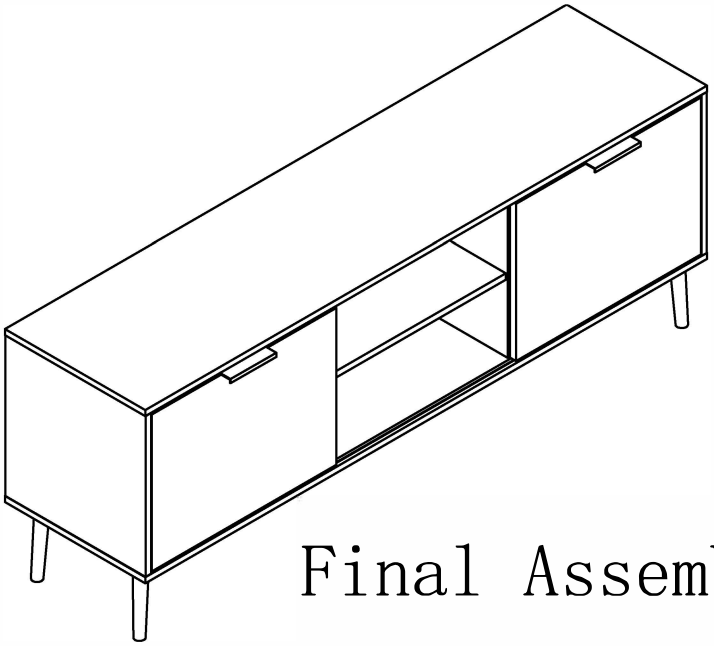

Final Assembly