Elevate Suite

General Specifications

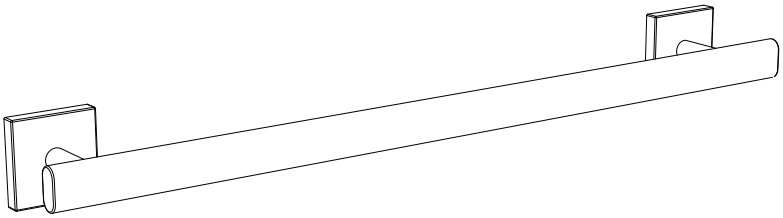

18” Towel Bar

#4051 (Chrome)
#4071 (Satin Nickel)
#4051MX (Matte Black)

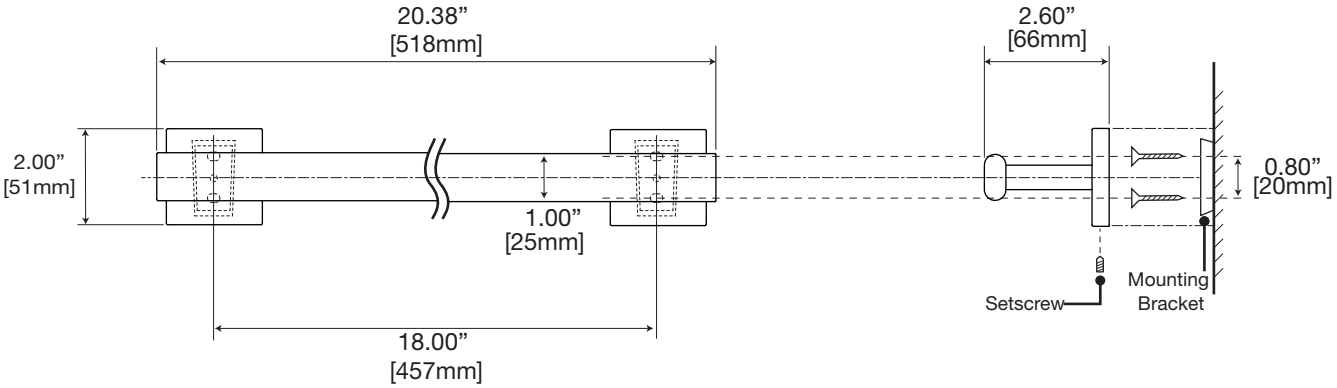

The manufacturer reserves the right to, and do time to time, make changes and improvements in designs and dimensions.
Updated on November 13, 2012