Product Specs Sheets

Cover Page

Cento 3536

Features

- Double Bathroom Sink
- Made of Ceramic
- Available in Glossy White, Matte Black, Matte White, and Matte Grey
- Matte White and Matte Grey (Special Order)
- With Overflow
- Wall Mount or Countertop (Vessel) Installation
- Available With One or Three Faucet Holes (4” or 8” Spread)
- Designed by Marc Sadler
- Made in Italy

Finishes:

- Glossy White
- Matte Black
- Matte White (Special Order)
- Matte Grey (Special Order)

Related Items:

- WSBC 53991 | Push Waste Drain
- WSBC 53922 | Decorative Trap
- Cento 911801 | 22.0" Front Towel Bar in Polished Chrome
- Cento 911601 | 16.1" Side Towel Bar in Polished Chrome

SKU# | Options:

- Cento 3536.01 WG | Glossy White, One Faucet Hole
- Cento 3536.03-4 WG | Glossy White, Three Faucet Holes 4” Spread
- Cento 3536.03-8 WG | Glossy White, Three Faucet Holes 8” Spread
- Cento 3536.01 BM | Matte Black, One Faucet Hole
- Cento 3536.03-4 BM | Matte Black, Three Faucet Holes 4” Spread
- Cento 3536.03-8 BM | Matte Black, Three Faucet Holes 8” Spread
- Cento 3536.01 WM | Matte White, One Faucet Hole
- Cento 3536.03-4 WM | Matte White, Three Faucet Holes 4” Spread
- Cento 3536.03-8 WM | Matte White, Three Faucet Holes 8” Spread
- Cento 3536.01 GM | Matte Grey, One Faucet Hole
- Cento 3536.03-4 GM | Matte Grey, Three Faucet Holes 4” Spread
- Cento 3536.03-8 GM | Matte Grey, Three Faucet Holes 8” Spread

Codes & Standards:

•ADA Compliant

*** WS Bath Collections reserves the right to revise dimensions or information on this sheet without notice**

Collection |	**Model |**	Dimensions Metric	
Cento	Cento 3536	*1 inch = 2.54 cm* *1 inch = 25.4 mm*	WS® BATH COLLECTIONS 1051 Lea Drive - Collegeville, PA 19426 Tel. 215 513 9400 - Fax 610 831 0215 www.wsbathcollections.com - info@wsbathcollections.com

Product Specs Sheets

Cento 3536

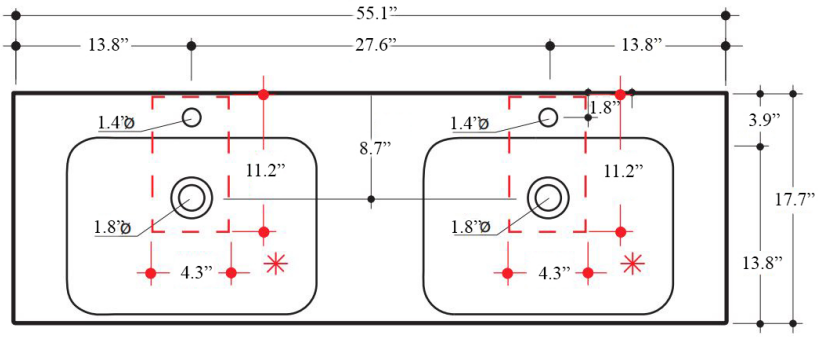

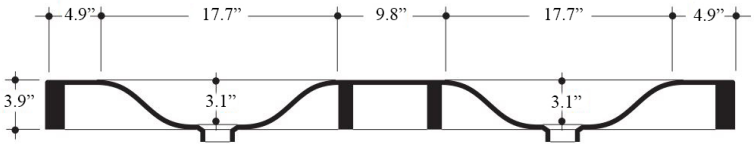

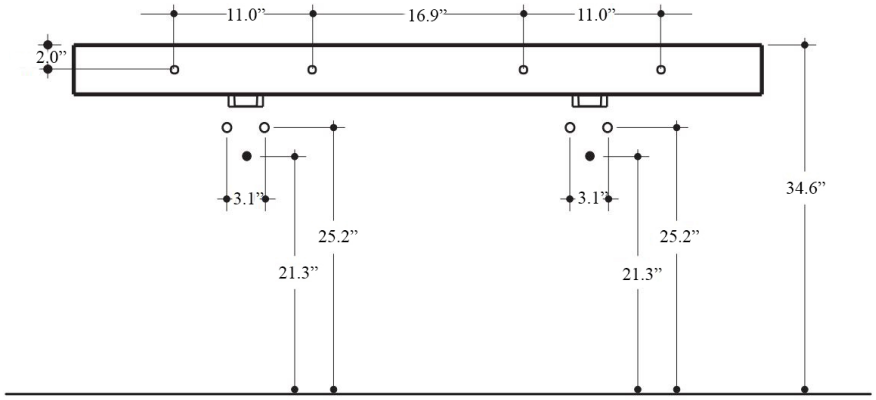

* WS Bath Collections reserves the right to revise dimensions or information on this sheet without notice

Collection	Model	Dimensions Metric	
Cento	Cento 3536	*1 inch = 2.54 cm* *1 inch = 25.4 mm*	WS BATH COLLECTIONS 1051 Lea Drive - Collegeville, PA 19426 Tel. 215 513 9400 - Fax 610 831 0215 www.wsbathcollections.com - info@wsbathcollections.com

Product Specs Sheets

We recommend the following items that work with your sink.

Cento 3536

TRAPS

WSBC 53922
Our best seller

Polished Chrome
WSBC 53922.29

Matte Black
WSBC 53922.22

WSBC 5392

Polished Chrome
WSBC 5392.29

WSBC 53925

Polished Chrome
WSBC 53925.29

WSBC 53921
Space saving

Polished Chrome
WSBC 53921.29

Matte Black
WSBC 53921.22

DRAINS

WSBC 53991
Push waste drain (click clack)
with overflow

Polished Chrome
WSBC 53991.29

Glossy White
WSBC 53991.09

Glossy Black
WSBC 53991.18

Matte White
WSBC 53991.26

Matte Black
WSBC 53991.22

MOUNTING HARDWARE

Wall-mount installation

Bolts

Vessel/ countertop installation

Silicone *(optional)*

Collection	Model	Dimensions Metric	
Cento	Cento 3536	*1 inch = 2.54 cm* *1 inch = 25.4 mm*	WS® BATH COLLECTIONS 1051 Lea Drive - Collegeville, PA 19426 Tel. 215 513 9400 - Fax 610 831 0215 www.wsbathcollections.com - info@wsbathcollections.com

Recommended ADA Installation

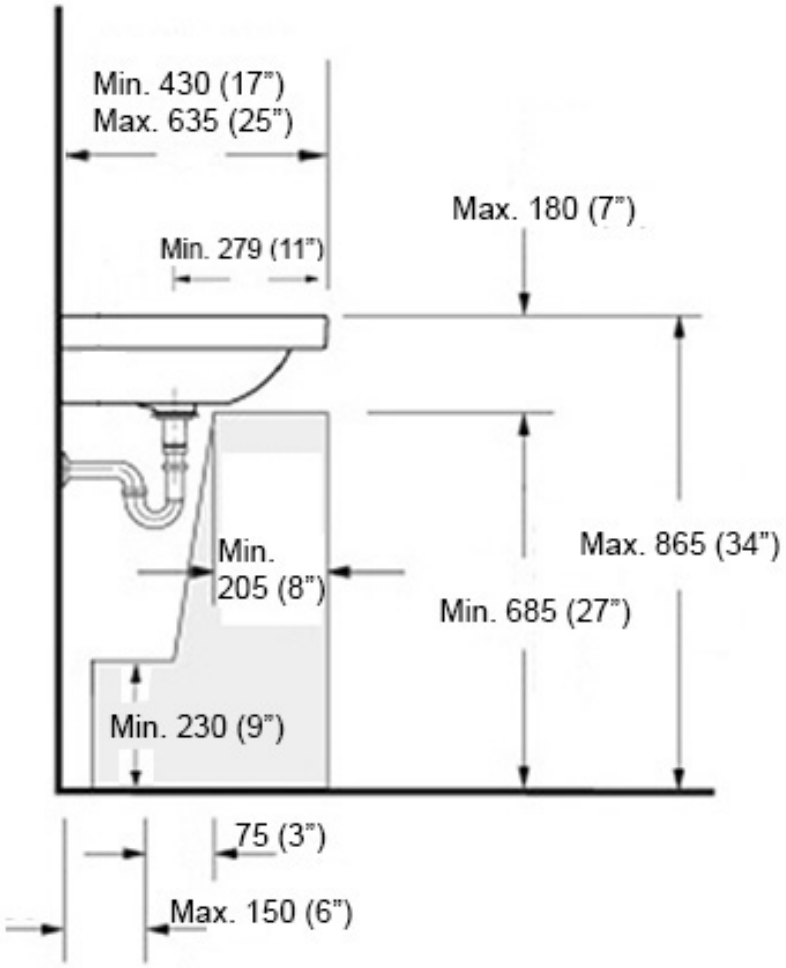

Note: ADA Compliant when installed in accordance with ADA guidelines

Collection	Model |	Dimensions Metric	
Cento	Cento 3536	*1 inch = 2.54 cm* *1 inch = 25.4 mm*	WS® BATH COLLECTIONS 1051 Lea Drive - Collegeville, PA 19426 Tel. 215 513 9400 - Fax 610 831 0215 www.wsbathcollections.com - info@wsbathcollections.com