6926920COM -Fireplace Mantel

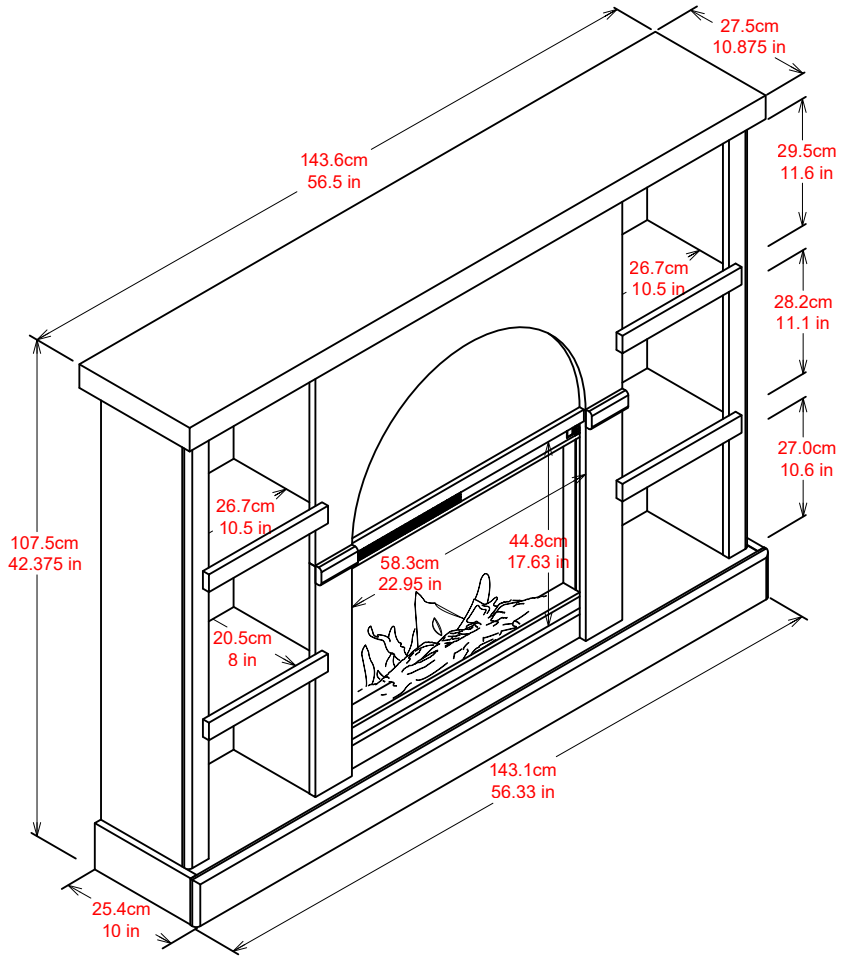

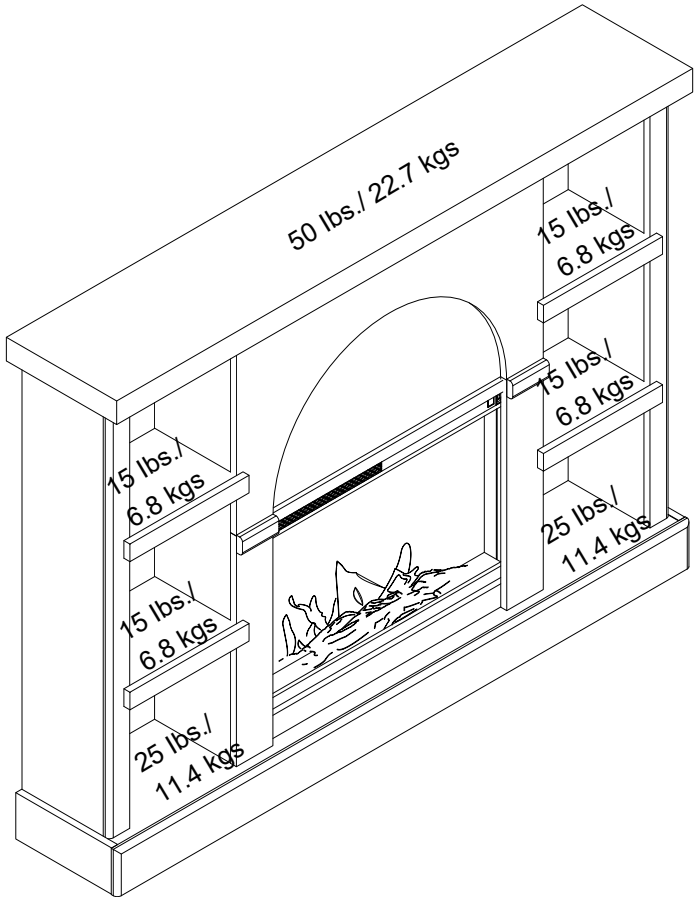

Wood Breakdown:
MDF 37%, PB 63%.
Total storage: 3.4 cubic feet

Overall Product Size:
56.5" W × 10.875" D × 42.375" H
143.6cm W × 27.5cm D × 107.5cm H

Maximum Weight Capacities
Unit Weight: 99.5 lbs. (45.13 kg)