ASSEMBLY INSTRUCTION

ITEM NO.: N701P241268- N701P241269

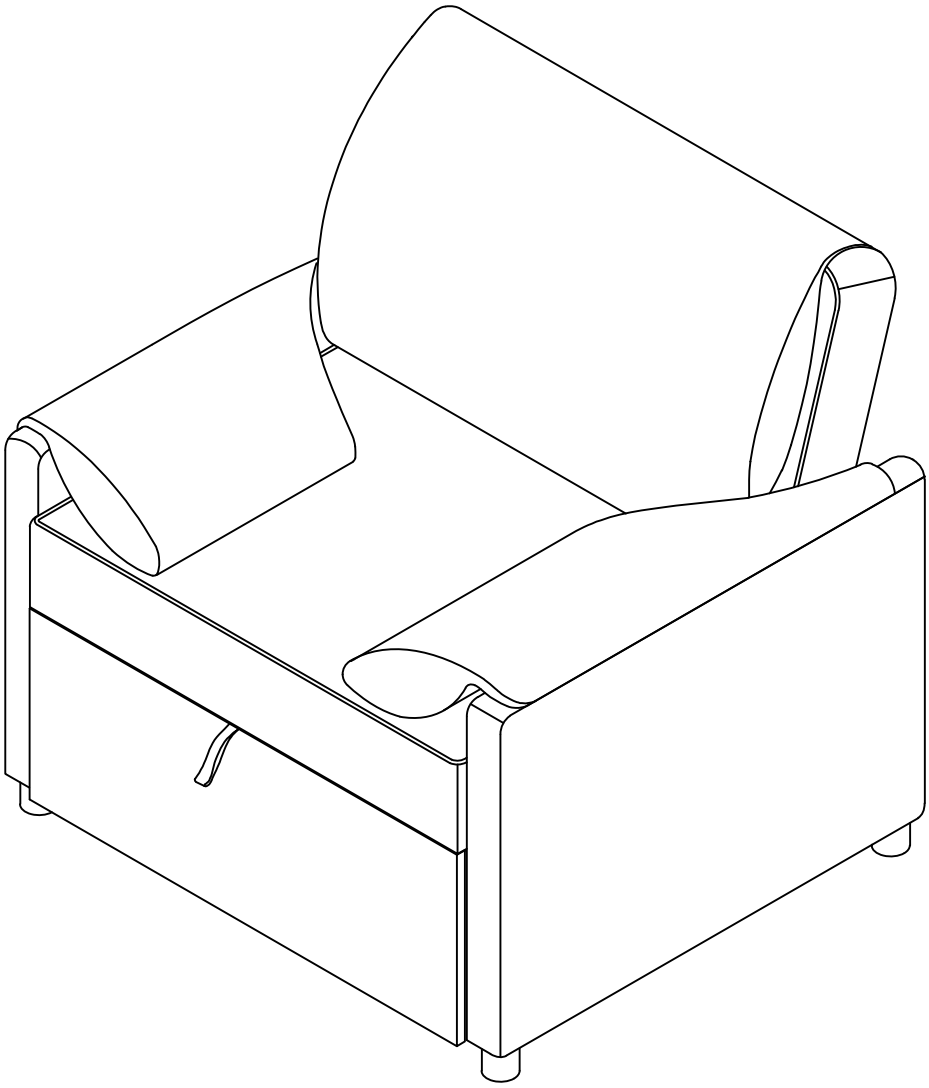

N701P241268 - COMPONENT LIST

NO.	DRAWING	QTY	DESCRIPTION
Ⓐ	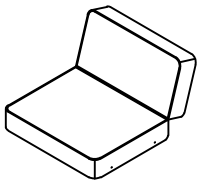	1	Seat and Backrest

N701P241269 - COMPONENT LIST

NO.	DRAWING	QTY	DESCRIPTION
Ⓑ	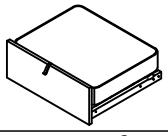	1	Pull Seat
Ⓒ	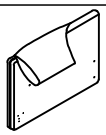	1	Left Arm
Ⓓ	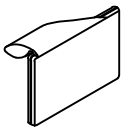	1	Right Arm
Ⓔ	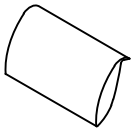	1	Backrest Pillows
Ⓕ	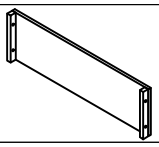	1	Back Panel
Ⓖ		4	Round Legs
Ⓗ		8	Wheels
Ⓘ		2	L Pads
Ⓙ		20	Bolt 1/4" x 20mm
Ⓚ		8	Bolt 5/16" x 50mm
Ⓛ		8	Flat Washer Ø8 5/16"
Ⓜ		1	Allen Key

*** Take out the** (A)

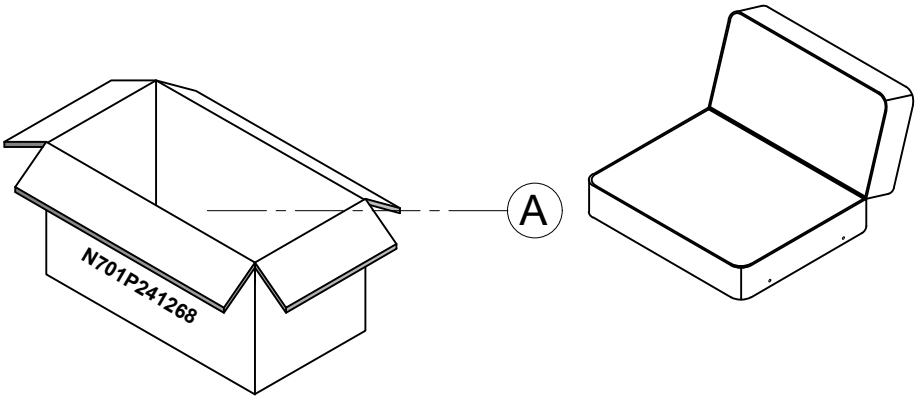

*** Take out the** (B) (C) (D) (E) (F) (G) (H) (I) (J) (K) (L) (M)

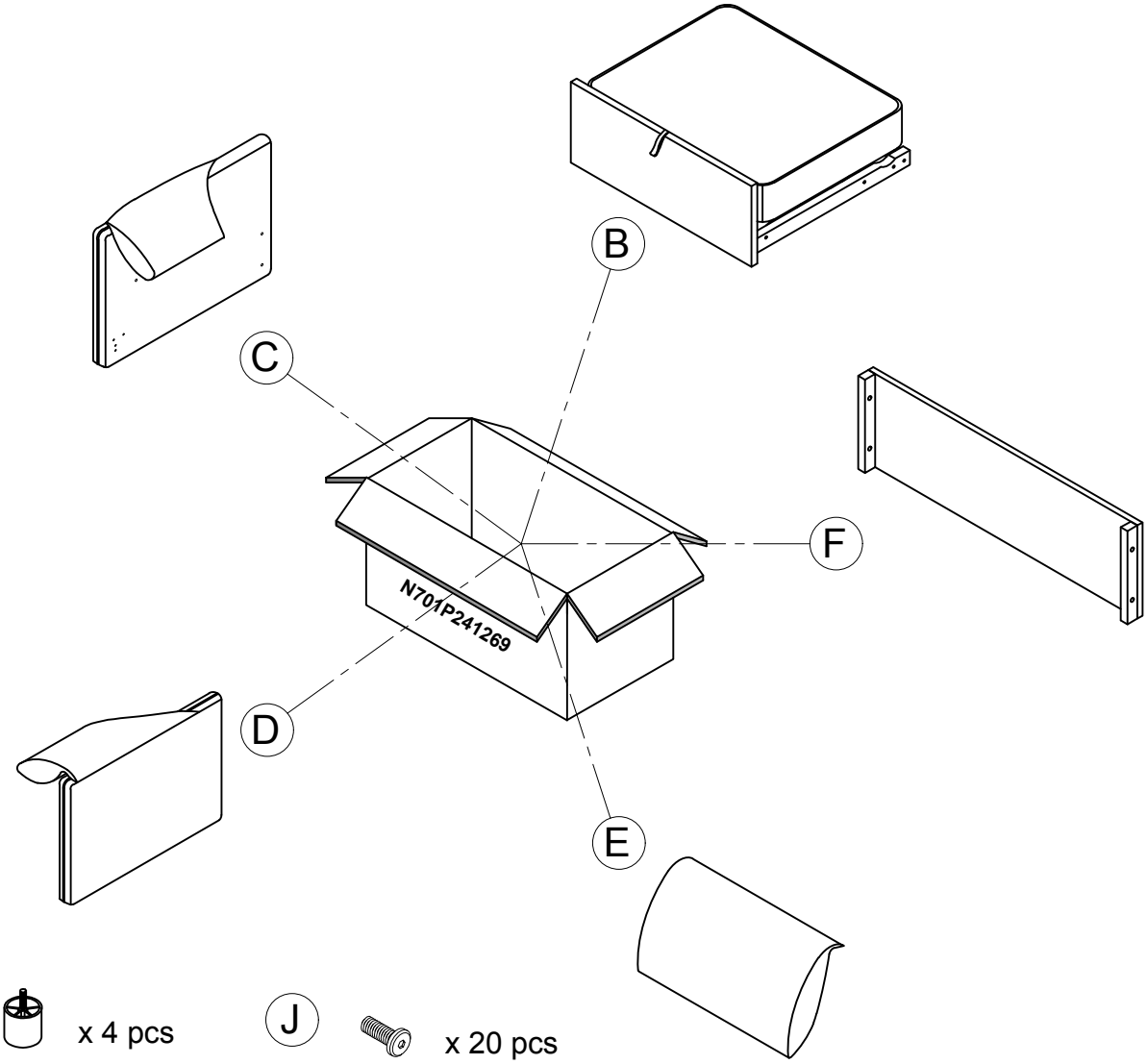

(G) x 4 pcs

(J) x 20 pcs

(H) x 8 pcs

(K) x 8 pcs

(M) x 1 pc

(I) x 2 pcs

(L) x 8 pcs

PARTS LIST

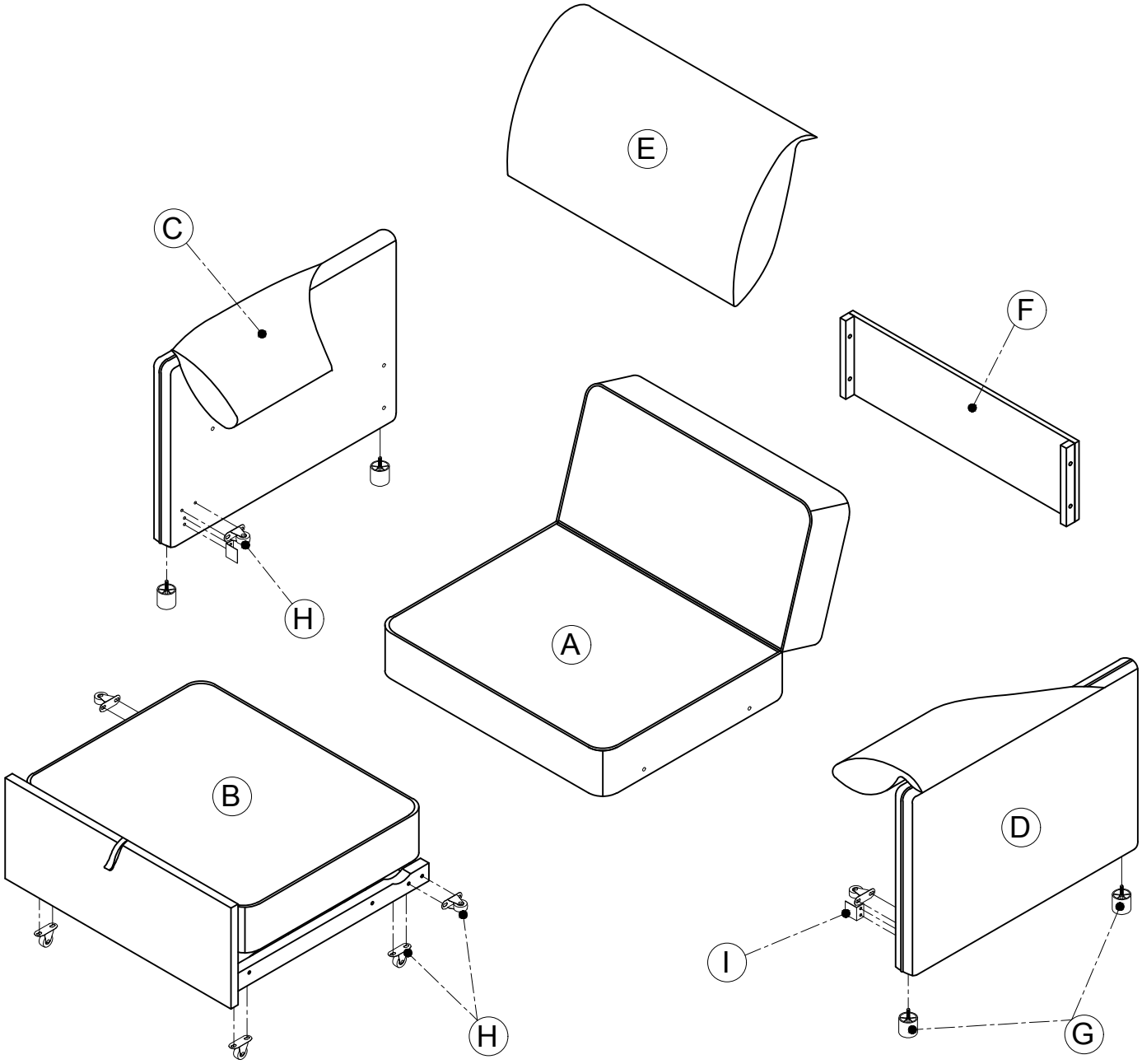

A 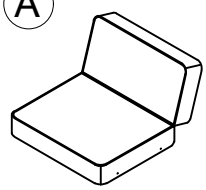	B 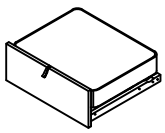	C 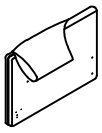	D 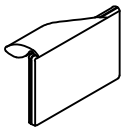	E 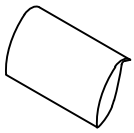	F 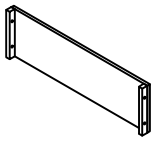	G
Seat and Backrest x 1 pc	Pull Seat x 1 pc	Left Arm x 1 pc	Right Arm x 1 pc	Backrest Pillows x 1 pc	Back Panel x 1 pc	Round Legs x 4 pcs
H	I	J	K	L	M	
Wheels x 8 pcs	L Pads x 2 pcs	Bolt 1/4" x 20mm x 20 pcs	Bolt 5/16" x 50mm x 8 pcs	Flat Washer Ø8 5/16" x 8 pcs	Allen Key x 1 pc	

STEP 1:

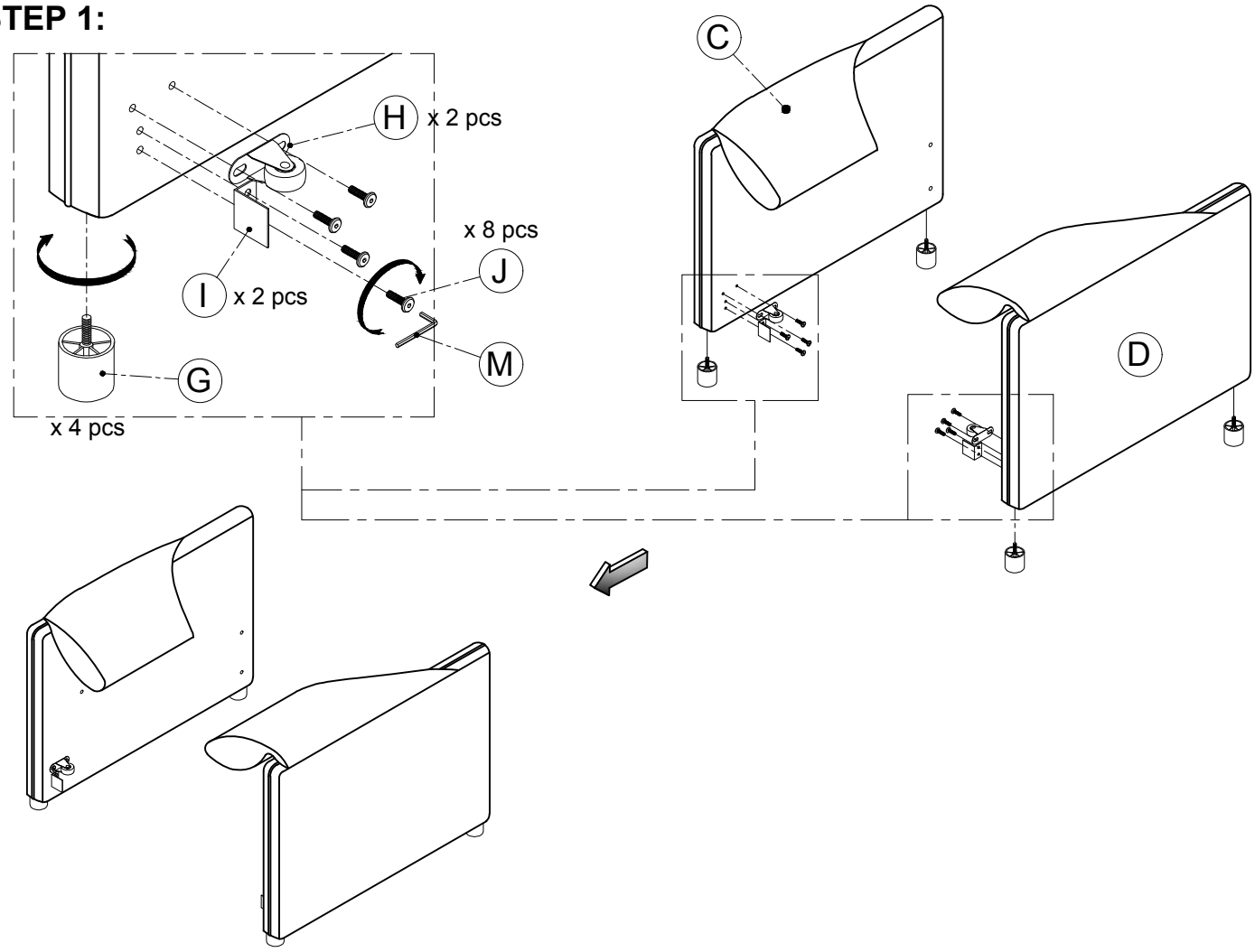
C
H
x 2 pcs
x 8 pcs
J
I
x 2 pcs
M
G
x 4 pcs
D

STEP 2:

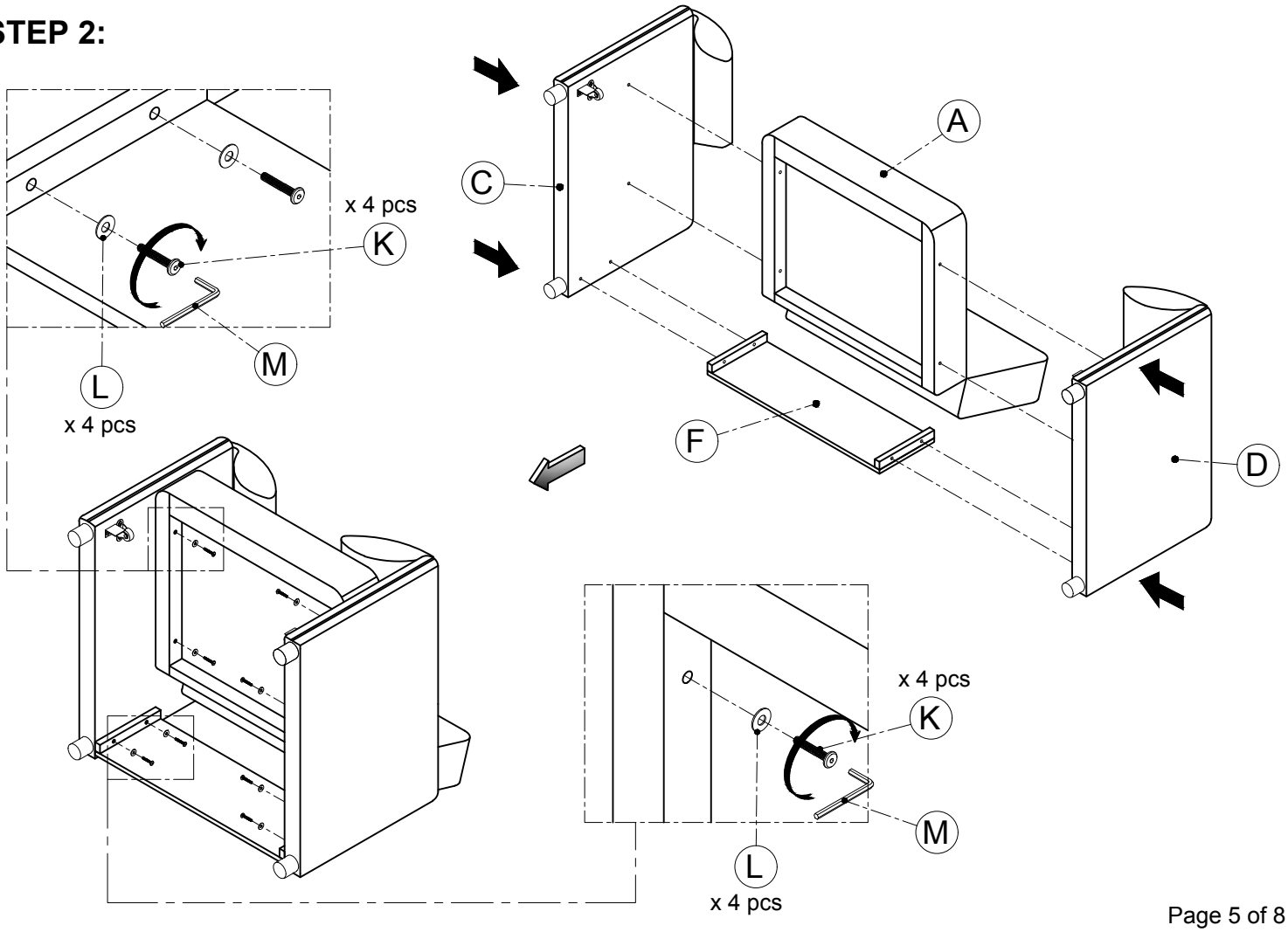
A
C
x 4 pcs
K
M
L
x 4 pcs
F
D
x 4 pcs
K
M
L
x 4 pcs

STEP 3:

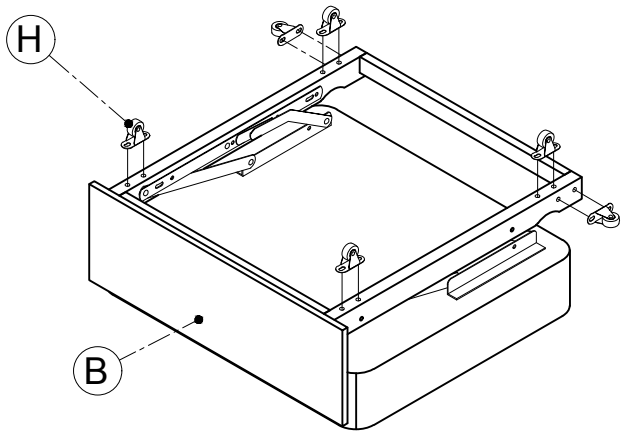

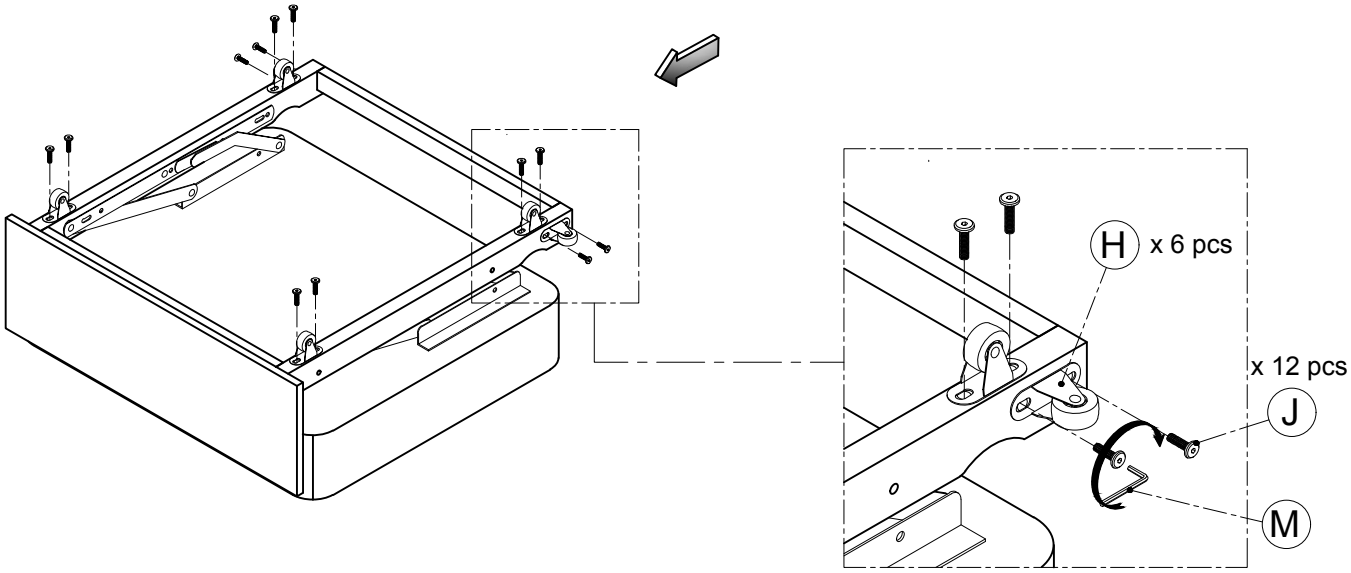

STEP 4:

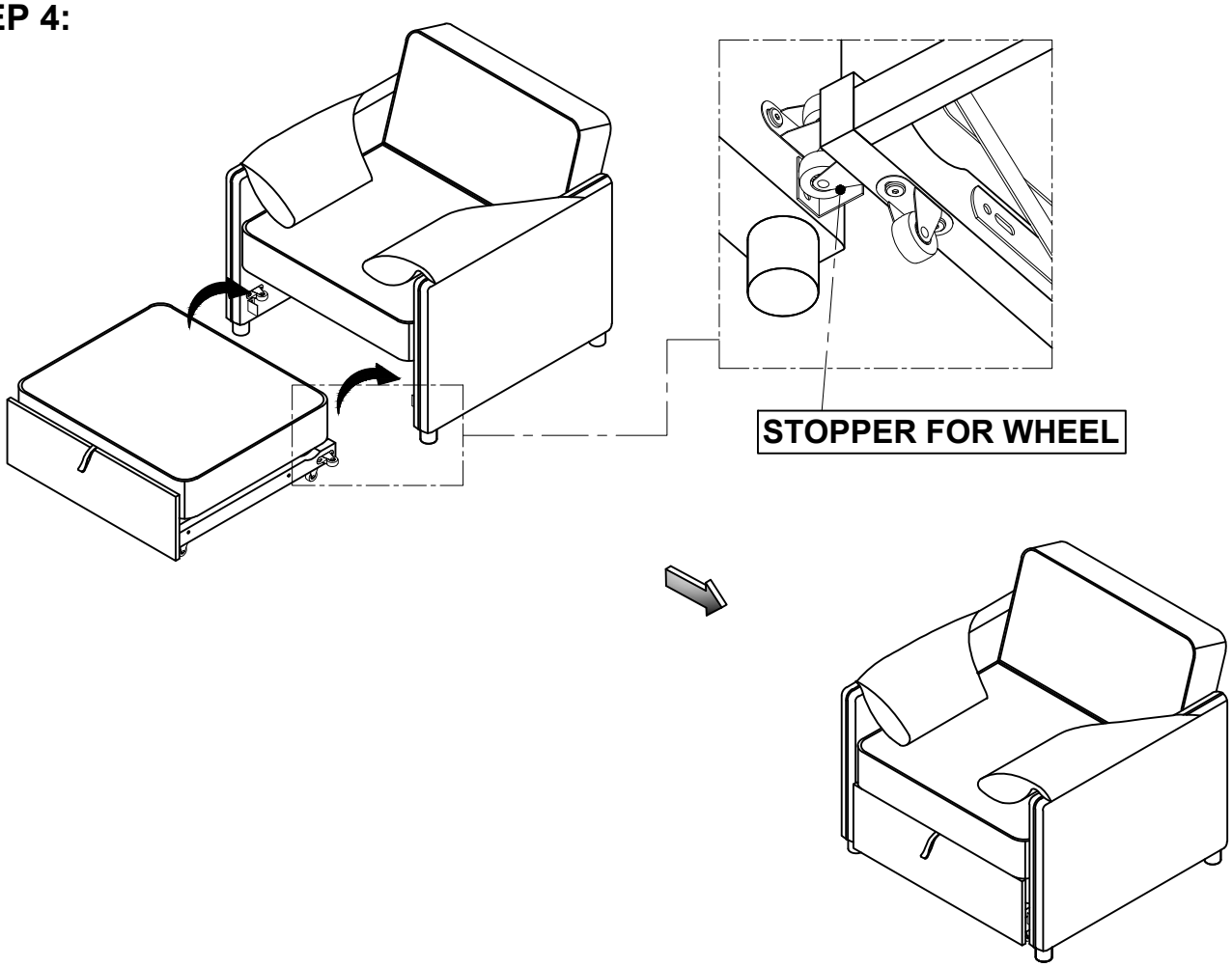

STEP 5:

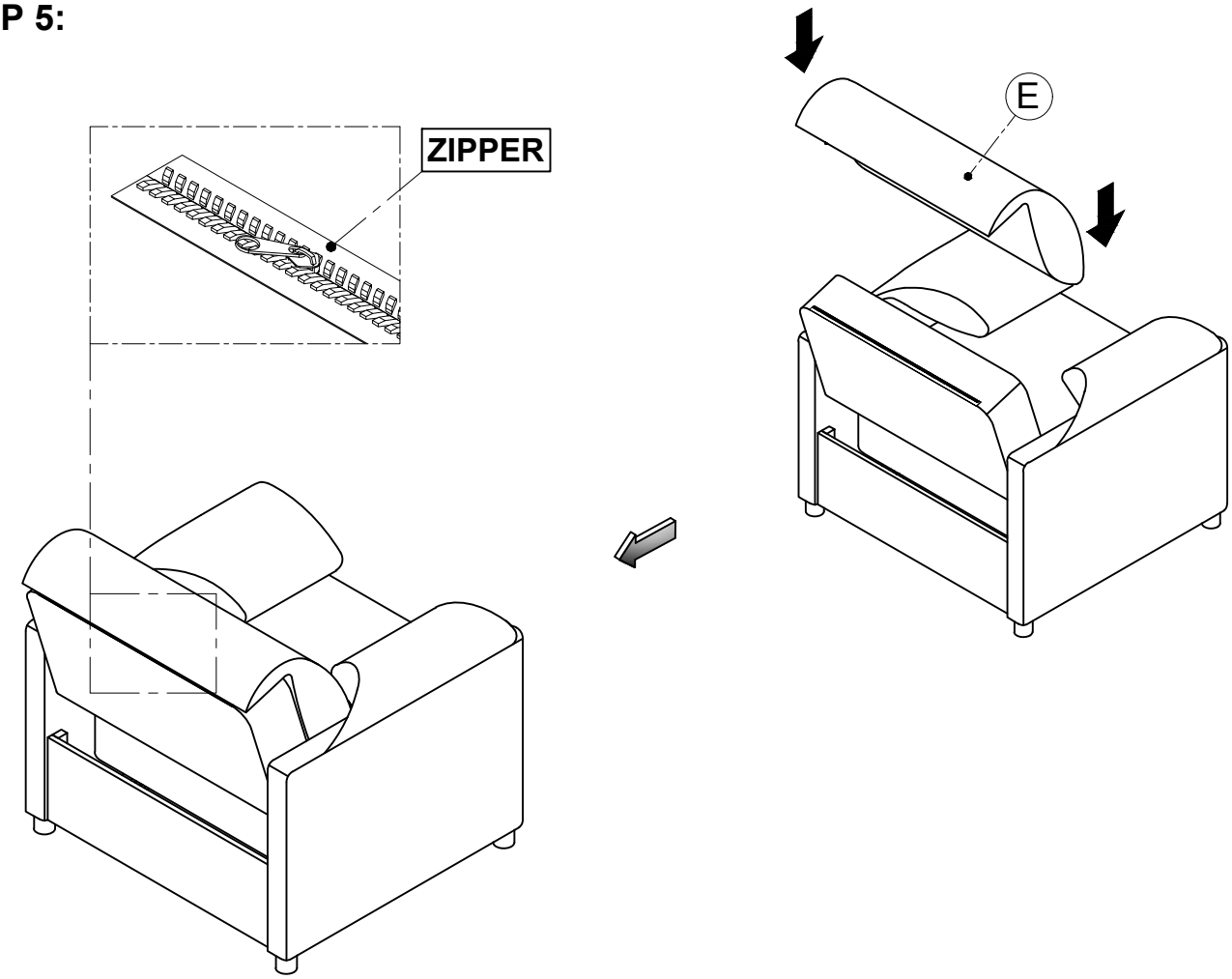

Helpful Hints

·Sofa bed can transform into a sleeper.
·Move your new furniture carefully, with two people lifting and carrying the unit to its new location.
·Your furniture can be disassembled and reassembled to move.
·Clean the product with a soft damp cloth. DO NOT use harsh chemicals or abrasive cleaners.
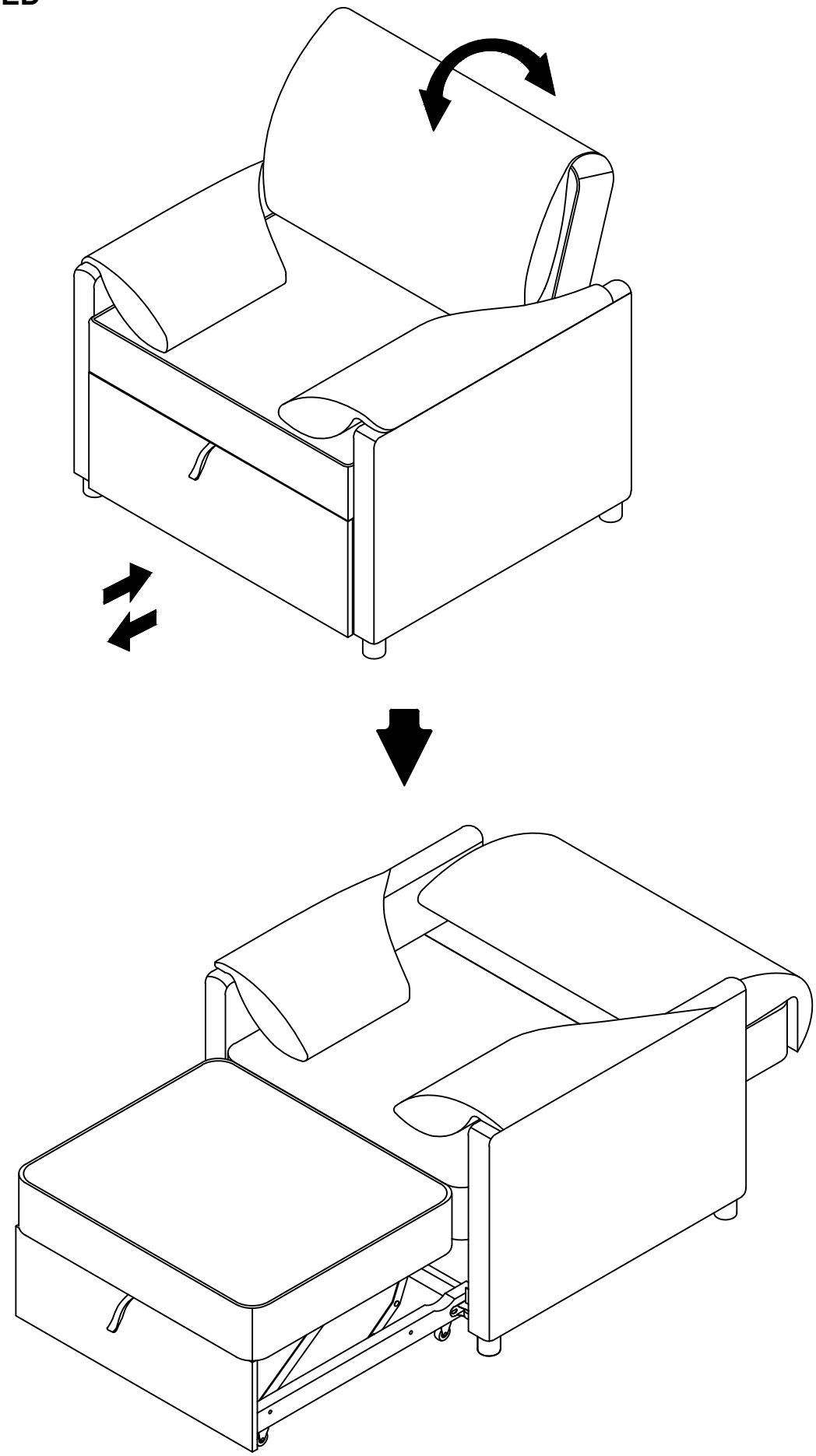
COMPLETED