Upholstered bed
N652P528204
N652P528205

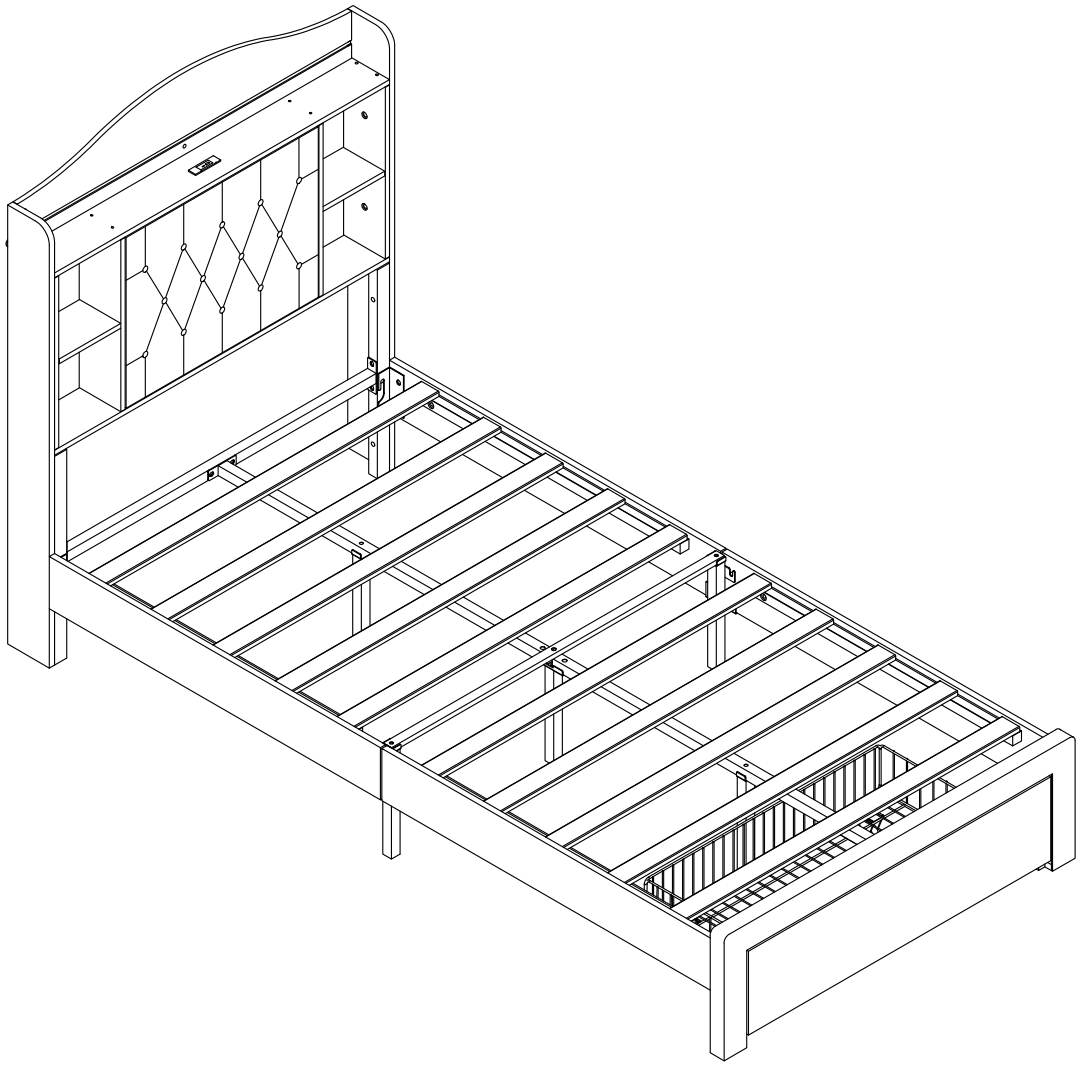

TIPS

1.This product is divided into 2 parcels for delivery. They may not arrive at the same time. Please wait patiently.

2.Please read the instructions fully before assembly. These instructions include important information which could ensure correct assembly. We have been working on providing high quality products for you. However, in the rare instance that your product is defective,missing parts or there are some issues, please don't hesitate to contact our customer service to submit parts requirements, assembly suggestion,or warranty claims, and we will give the best solution as soon as possible. If necessary, we need you to provide some more clear pictures of the issue.

3.Insert the screws in holes and tighten the screws, but not too tight, 70%~80% is ok, finally tighten all the screws. If some issues happened that some screws can not target to the hole or some parts are difficult to install, please adjust the tightness of the screws.

4.2 people are recommended to finish.

SKU:N652P528204

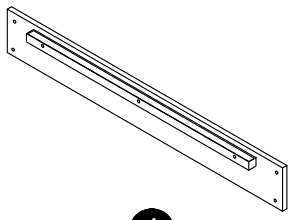

4
X4



9
X1



10
X1

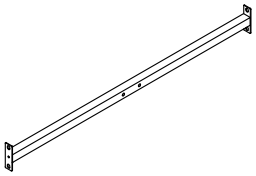

11
X1

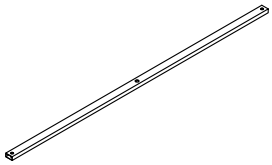

14
X1

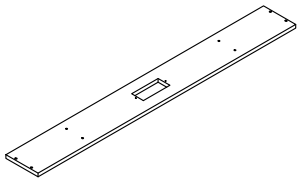

21
X1

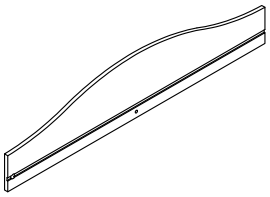

24
X1

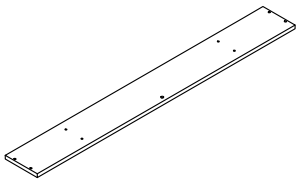

25
X1



28
X1



29
X1

SKU:N652P528205

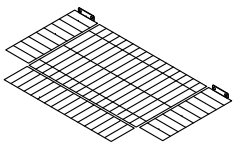

1
X1

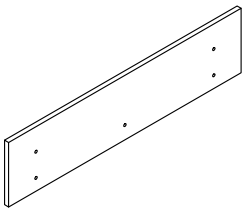

8
X1

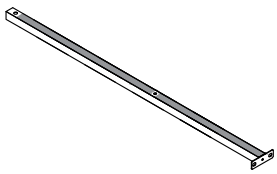

12
X2

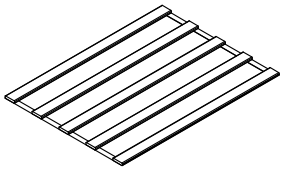

17
X2

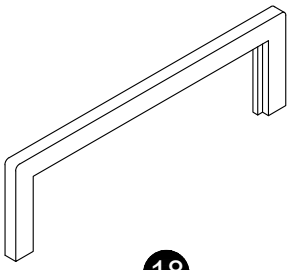

18
X1

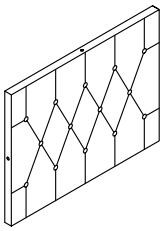

20
X1



22
X2



23
X2

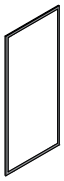

26
X2



27
X2

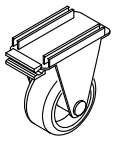

2
X4

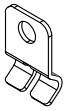

3
X1

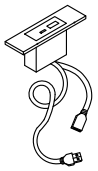

5
X1

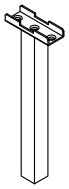

6
X1



7
X2

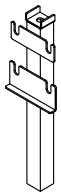

13
X2



15
X2



16
X2

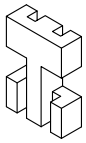

19
X2



30
X4



31
X1

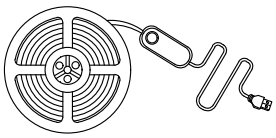

light bar

32
X1

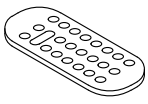

Remote Control

33
X1

SKU:N652P528205

Hardware parts

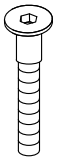

A
M5*35
X24+3

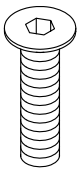

B
M6*20
X14+2

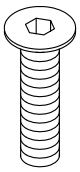

C
M6*25
X4+1

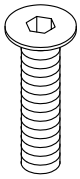

D
M6*15
X25+3

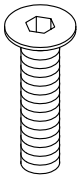

E
M8*50
X5+1

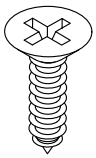

F
M3*12
X2+1

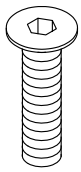

G
M6*35
X2+1

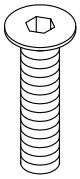

H
M8*35
X2+1

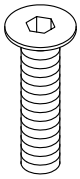

I
M8*25
X4+1



J
M5
X1



K
M3
X1

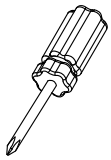

L
X1

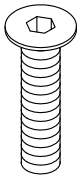

M
M6*10
X10+2

OVERVIEW

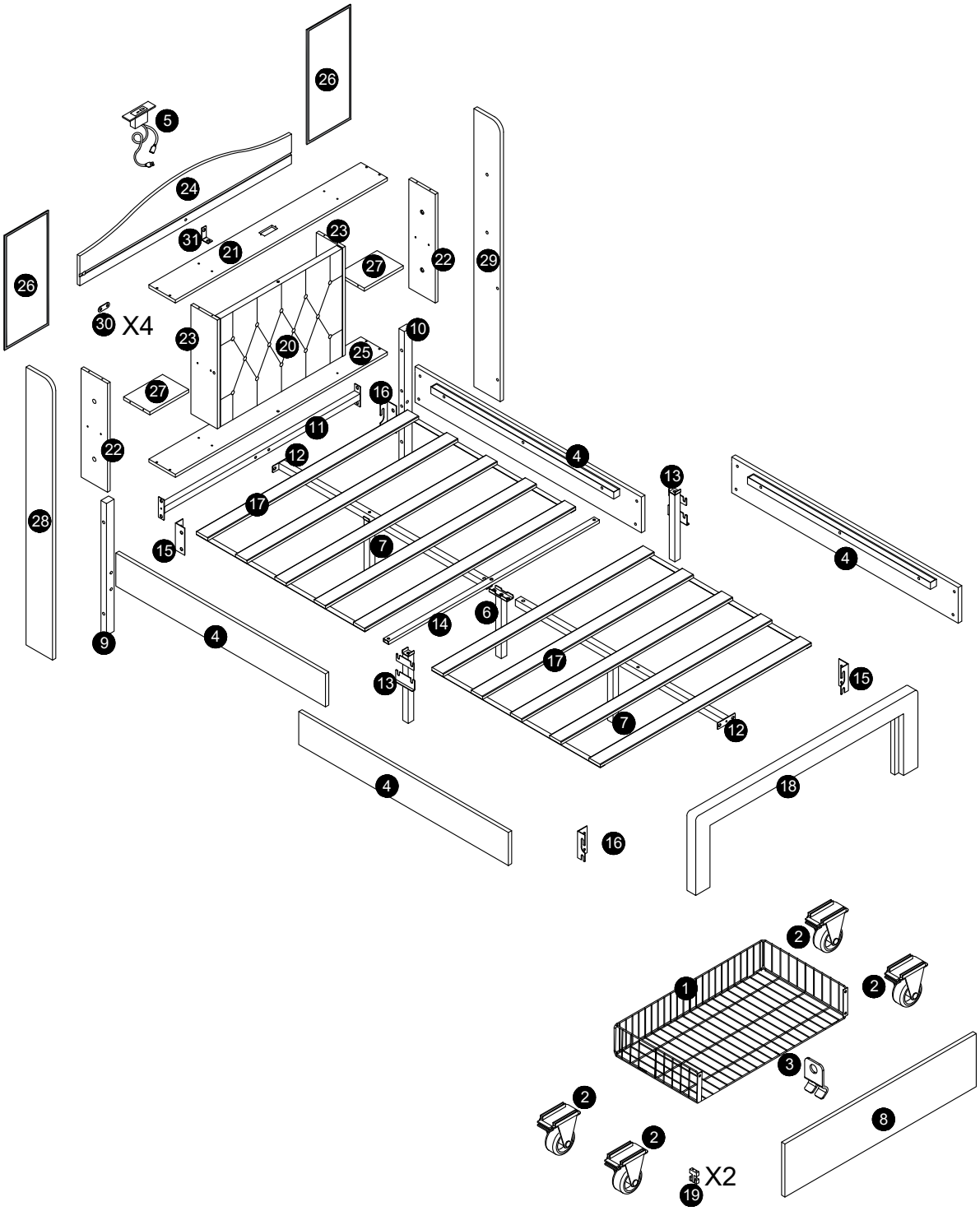
26
5
24
31
21
23
27
22
29
26
30 X4
23
20
25
10
27
16
11
22
12
4
13
17
28
15
7
4
9
4
14
6
17
13
15
7
12
4
18
16
2
1
2
3
8
2
2
19 X2

Assembly Instruction

1

A M5*35

X4

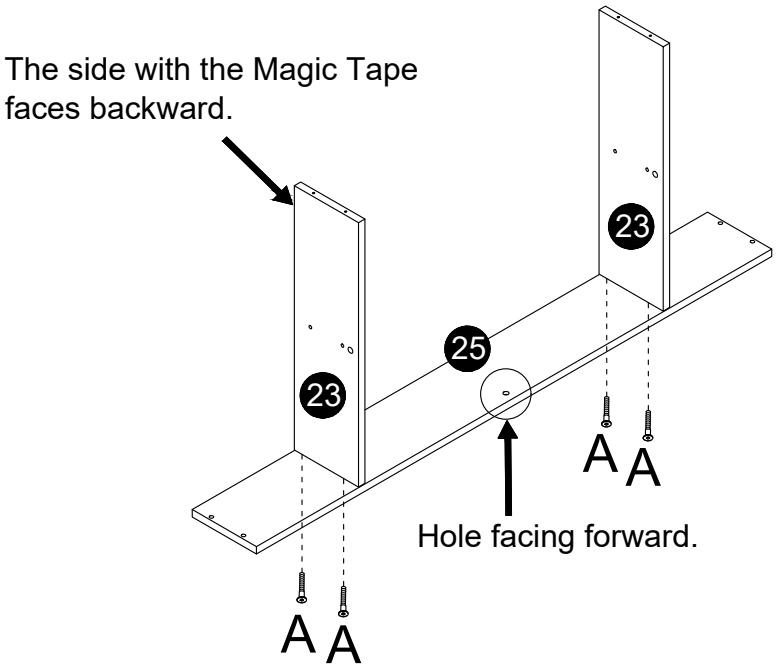

2

C M6*25

X3

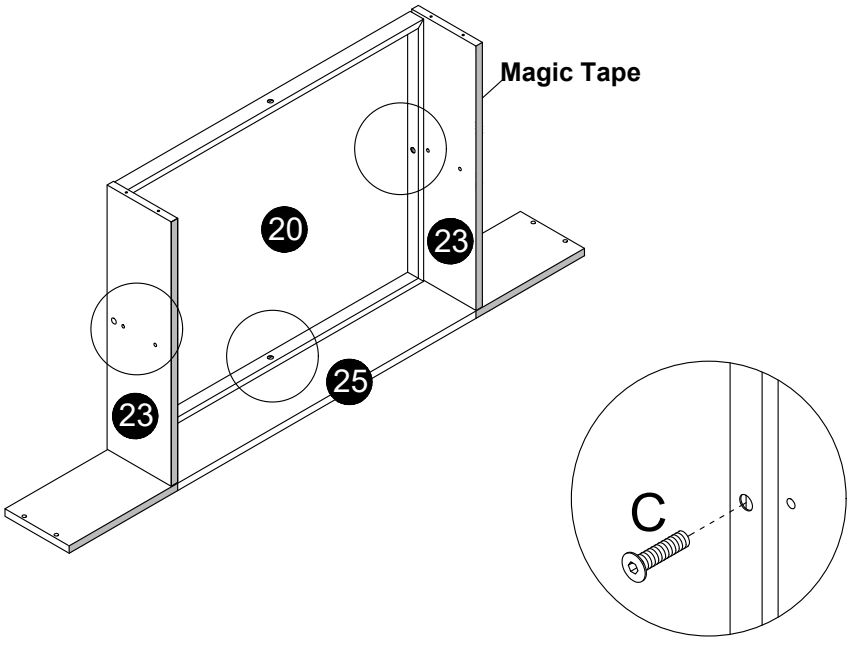

Assembly Instruction

3

A M5*35 X4

C M6*25 X1

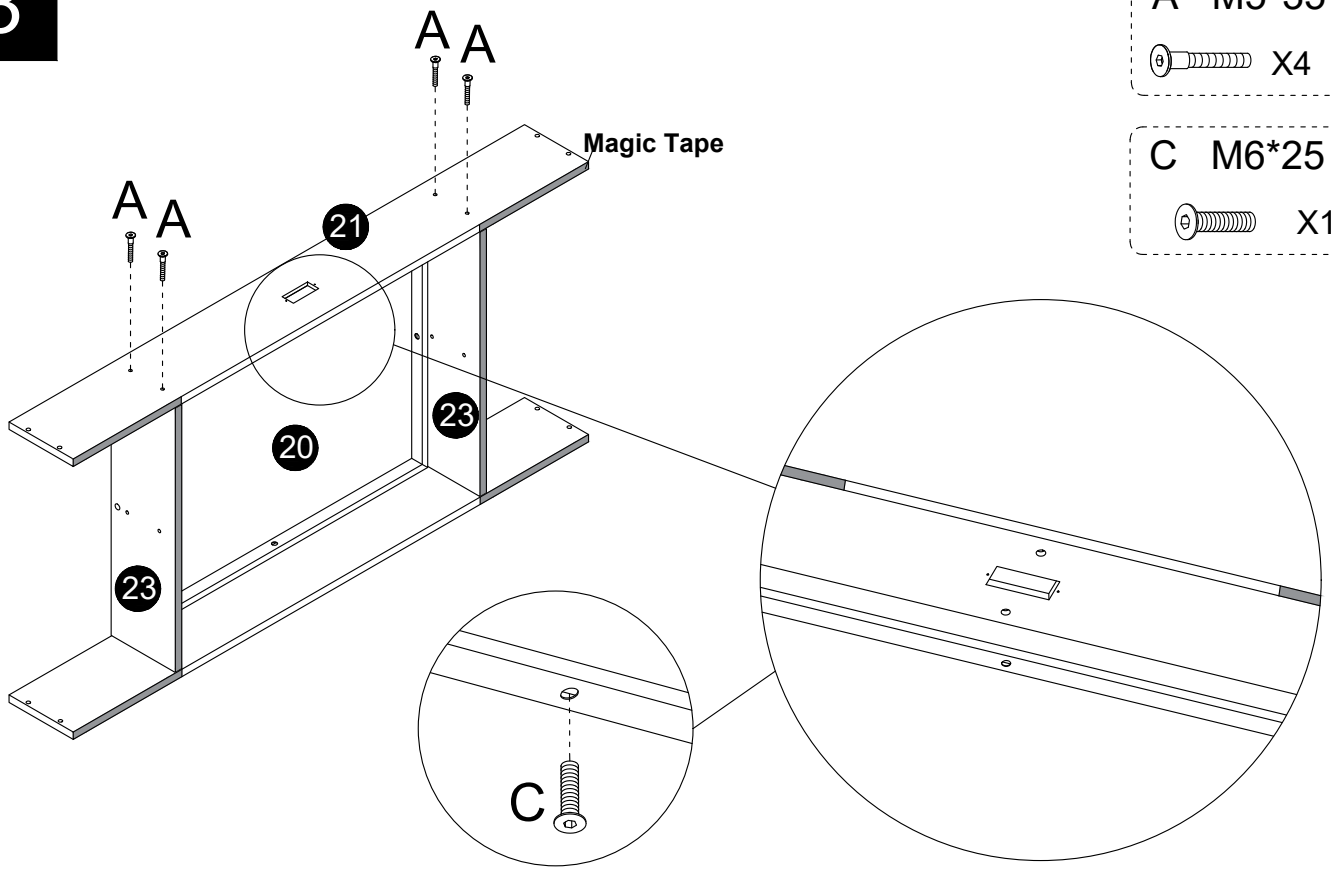

4

A M5*35 X4

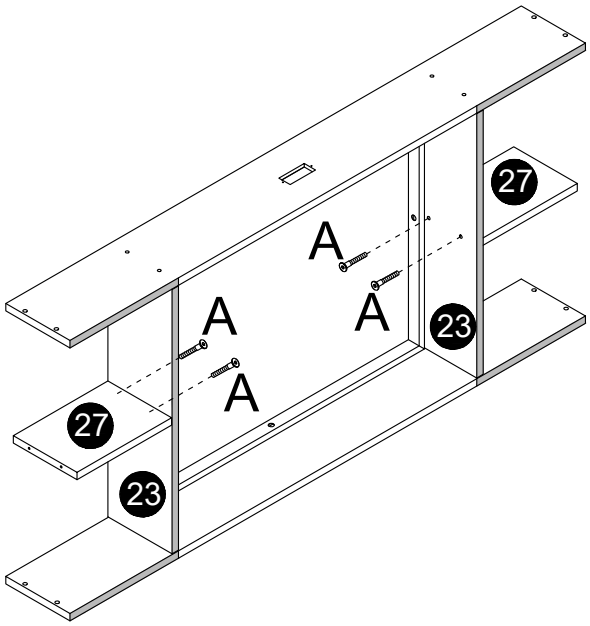

Assembly Instruction

5

A M5*35 X12

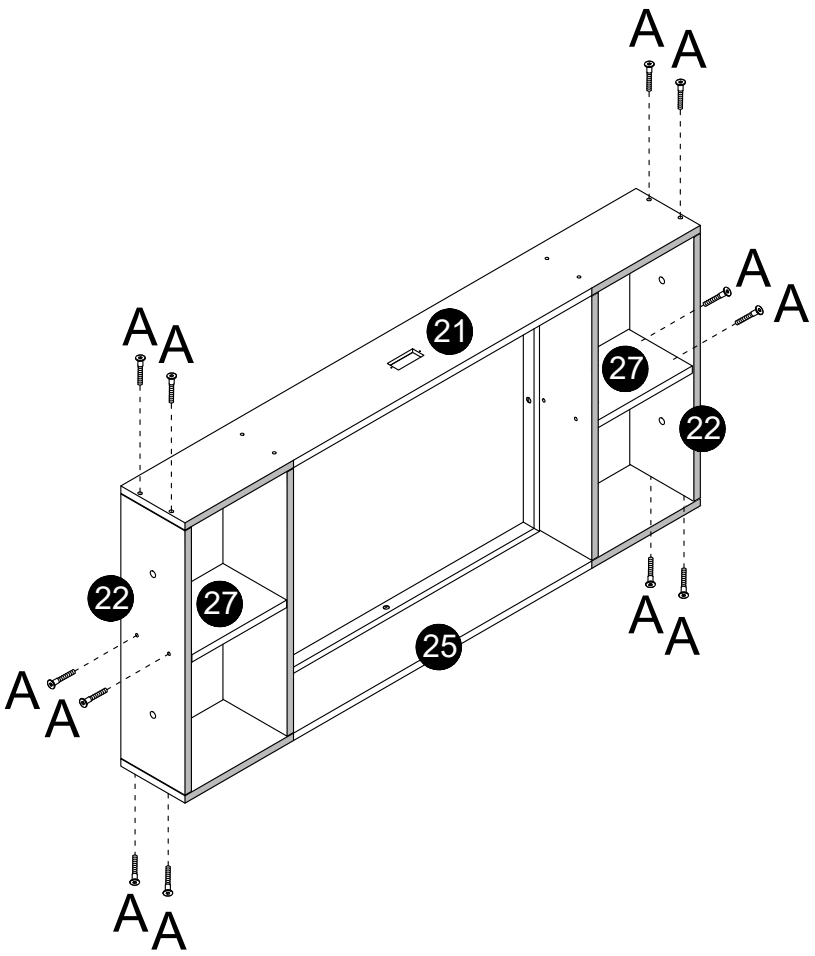

6

I M8*25 X4

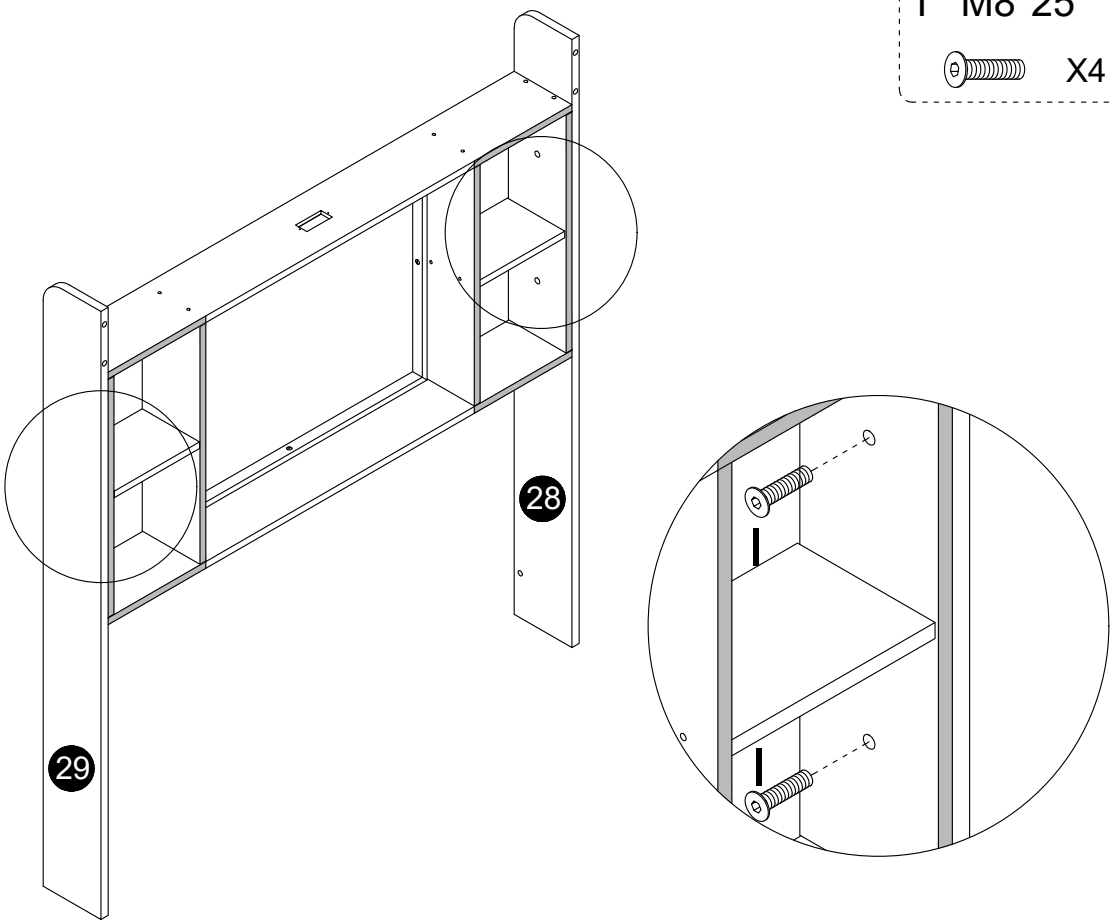

Assembly Instruction

7

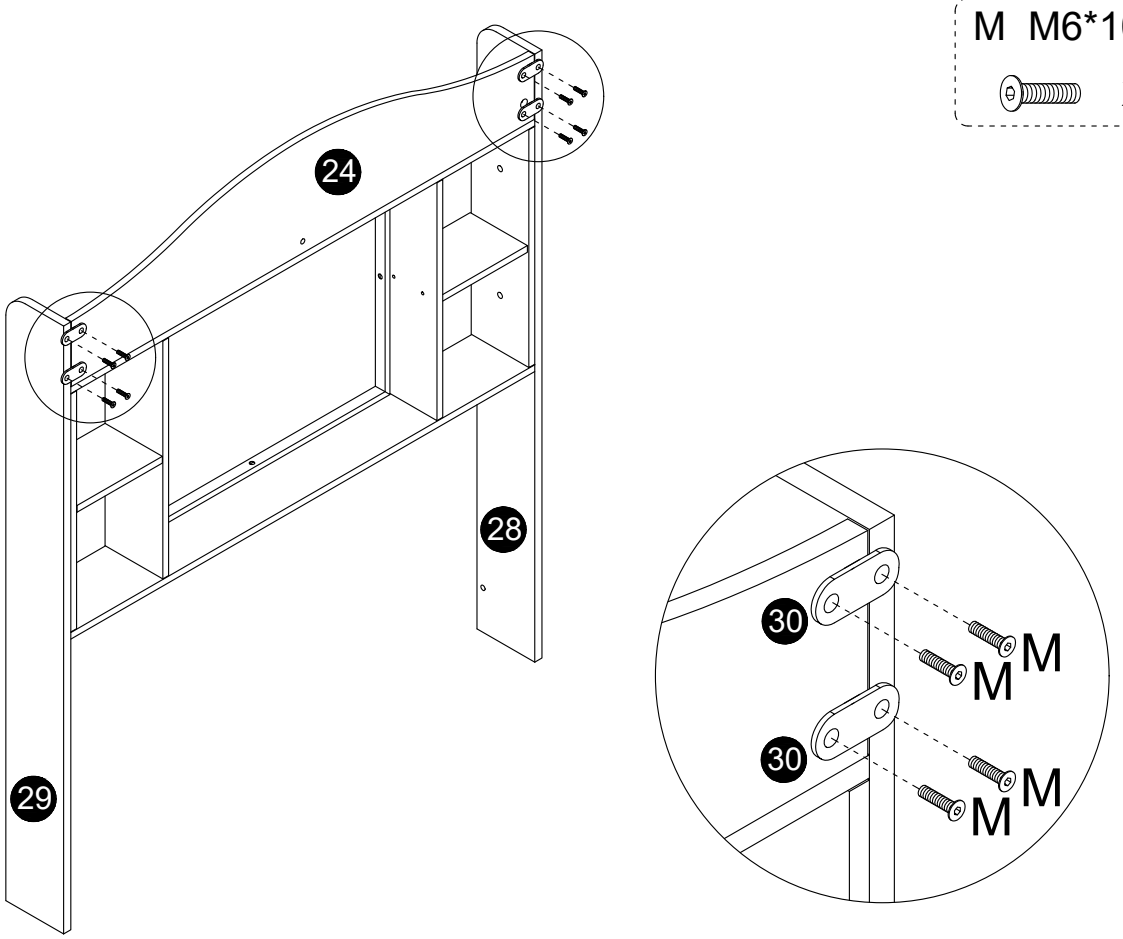

8

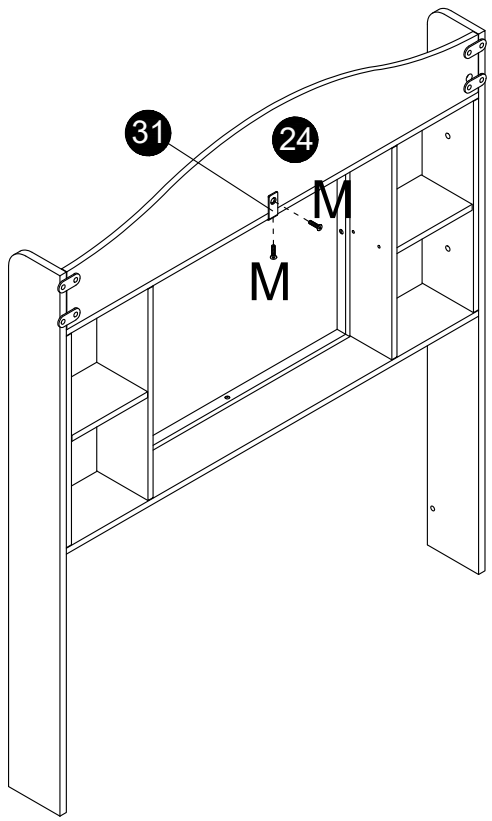

Assembly Instruction

9

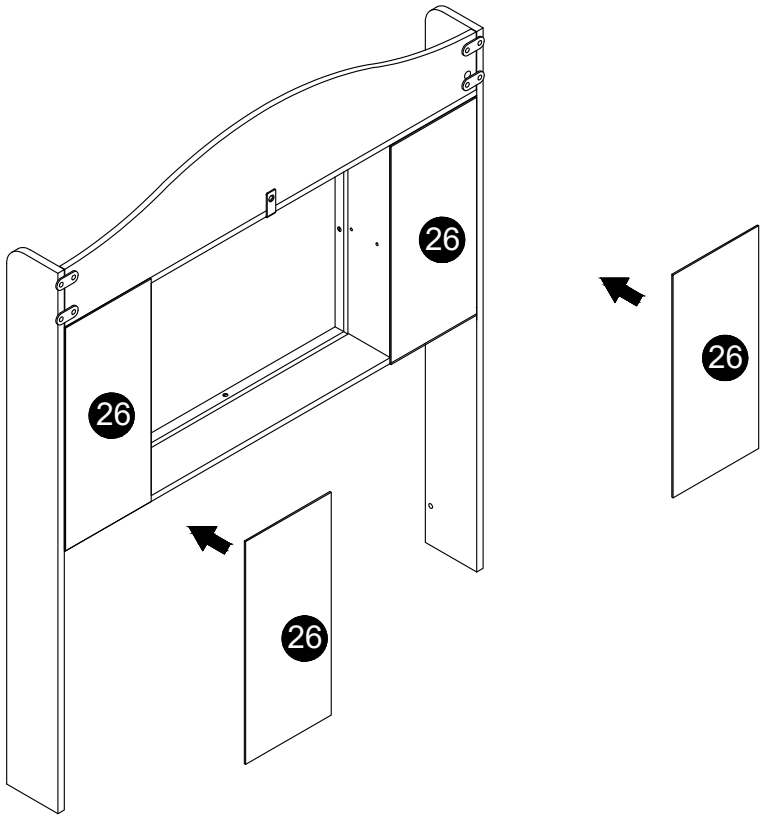

10

E M8*50

X4

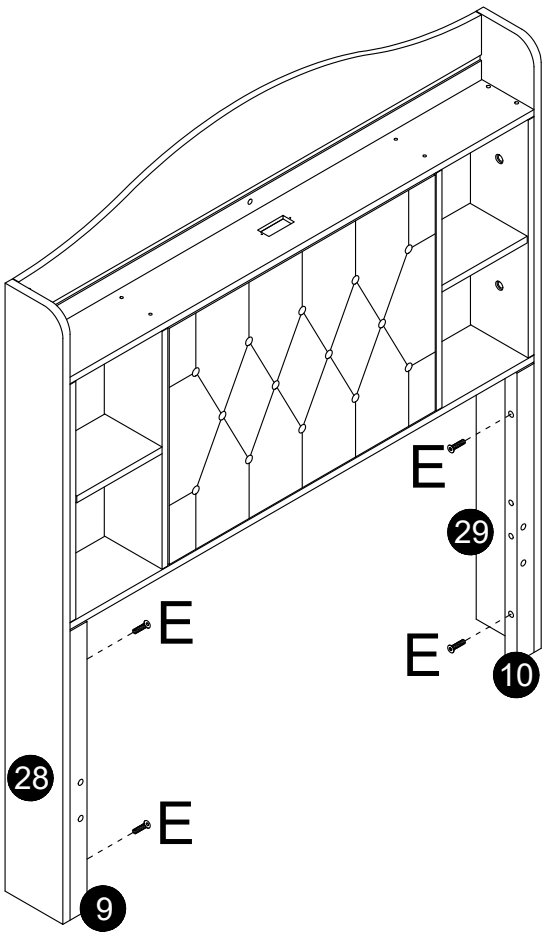

Assembly Instruction

11

D M6*15

X4

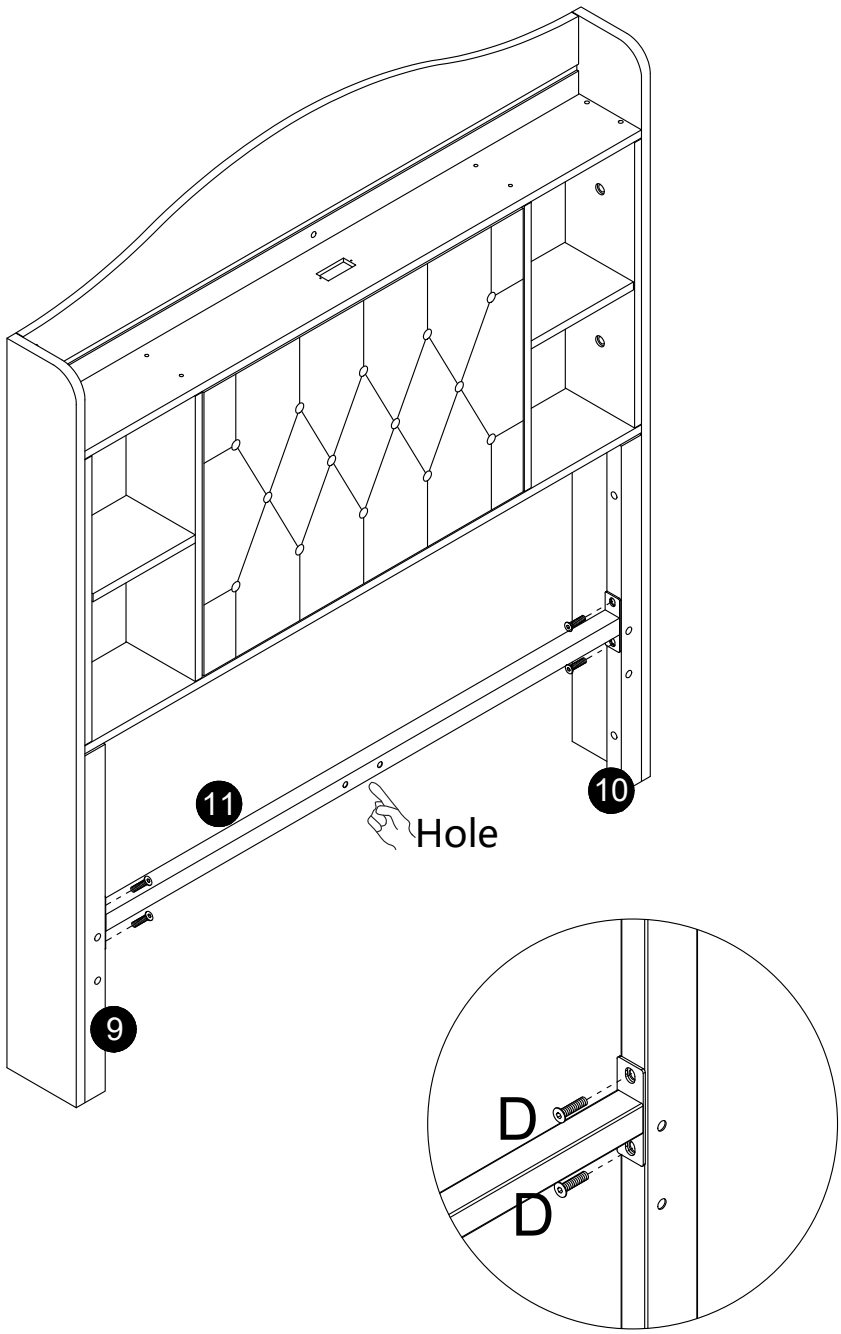

Assembly Instruction

12

D M6*15

X16

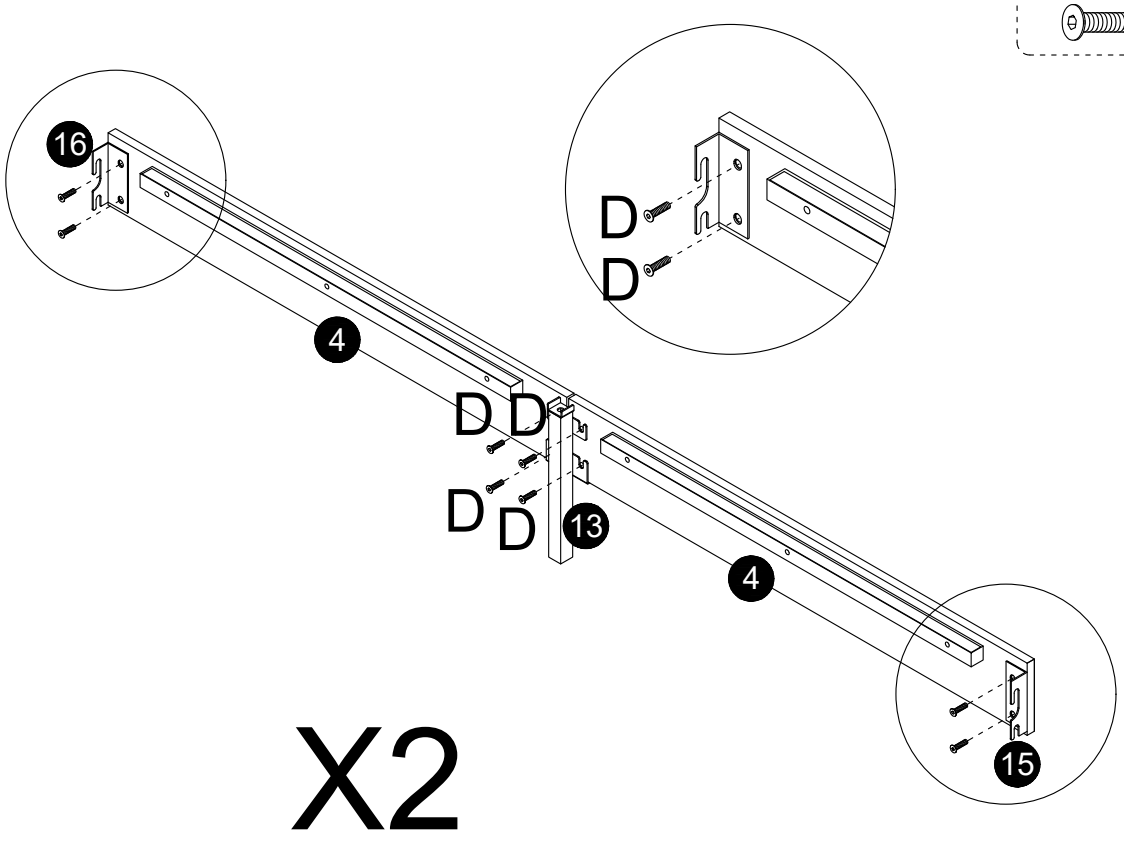

X2

13

B M6*20

X8

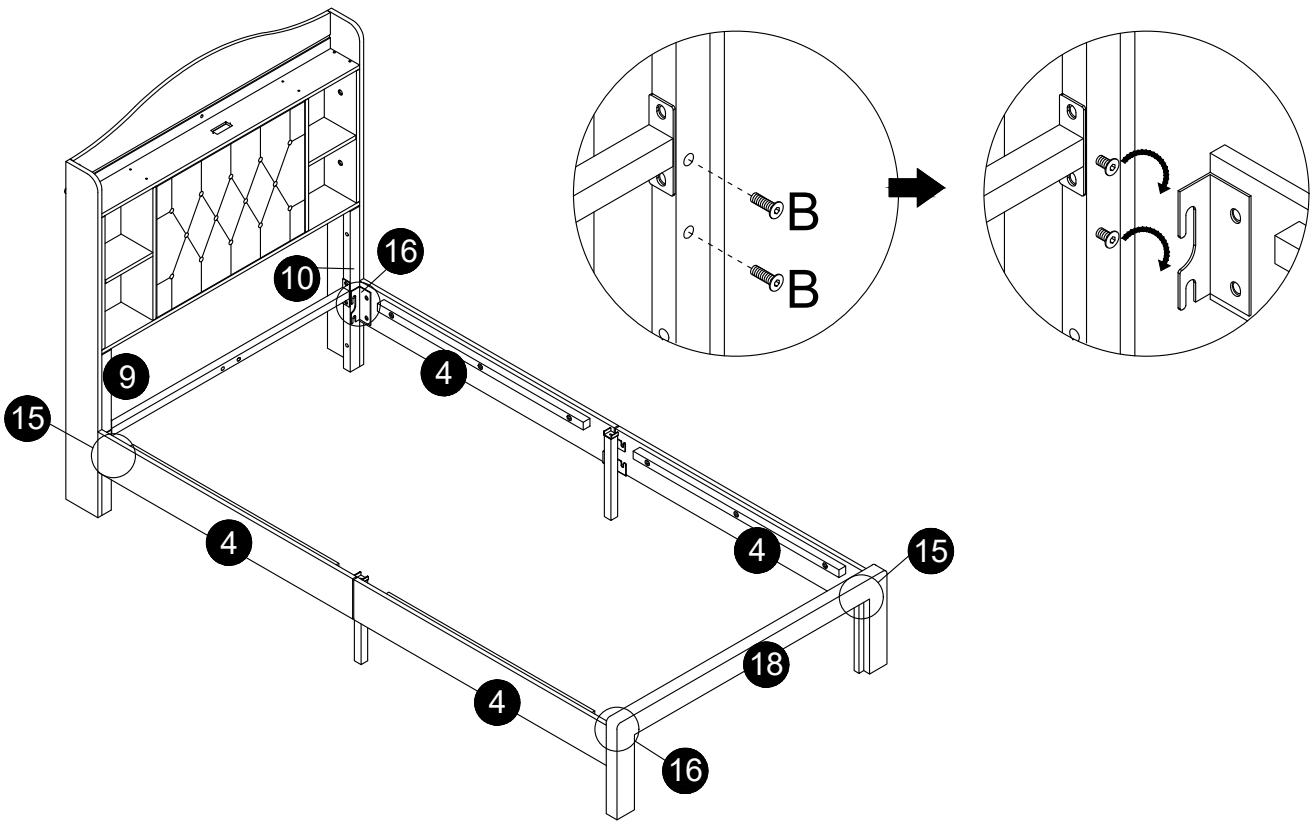

Assembly Instruction

14

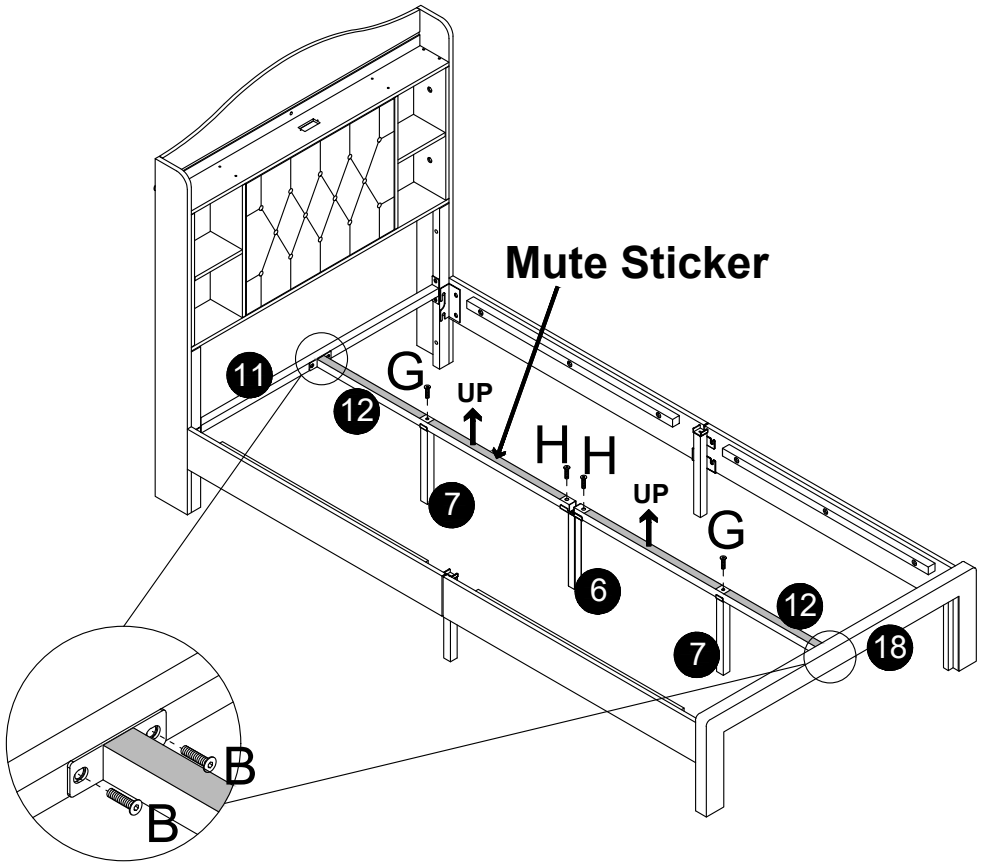

B M6*20 X4

G M6*35 X2

H M8*35 X2

15

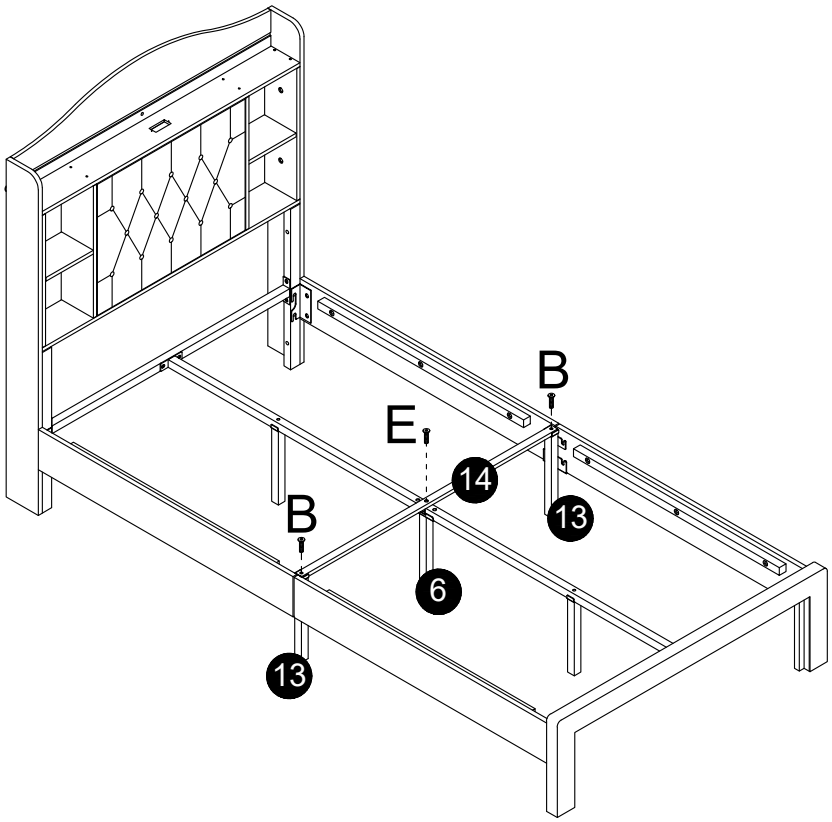

B M6*20 X2

E M8*50 X1

Assembly Instruction

16

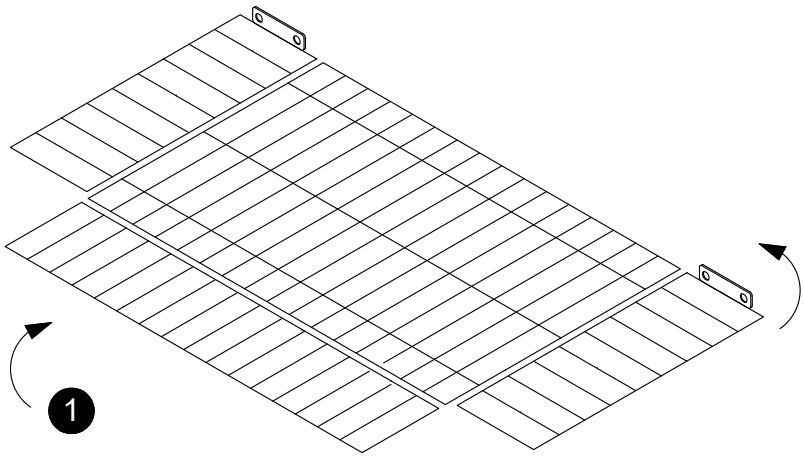

17

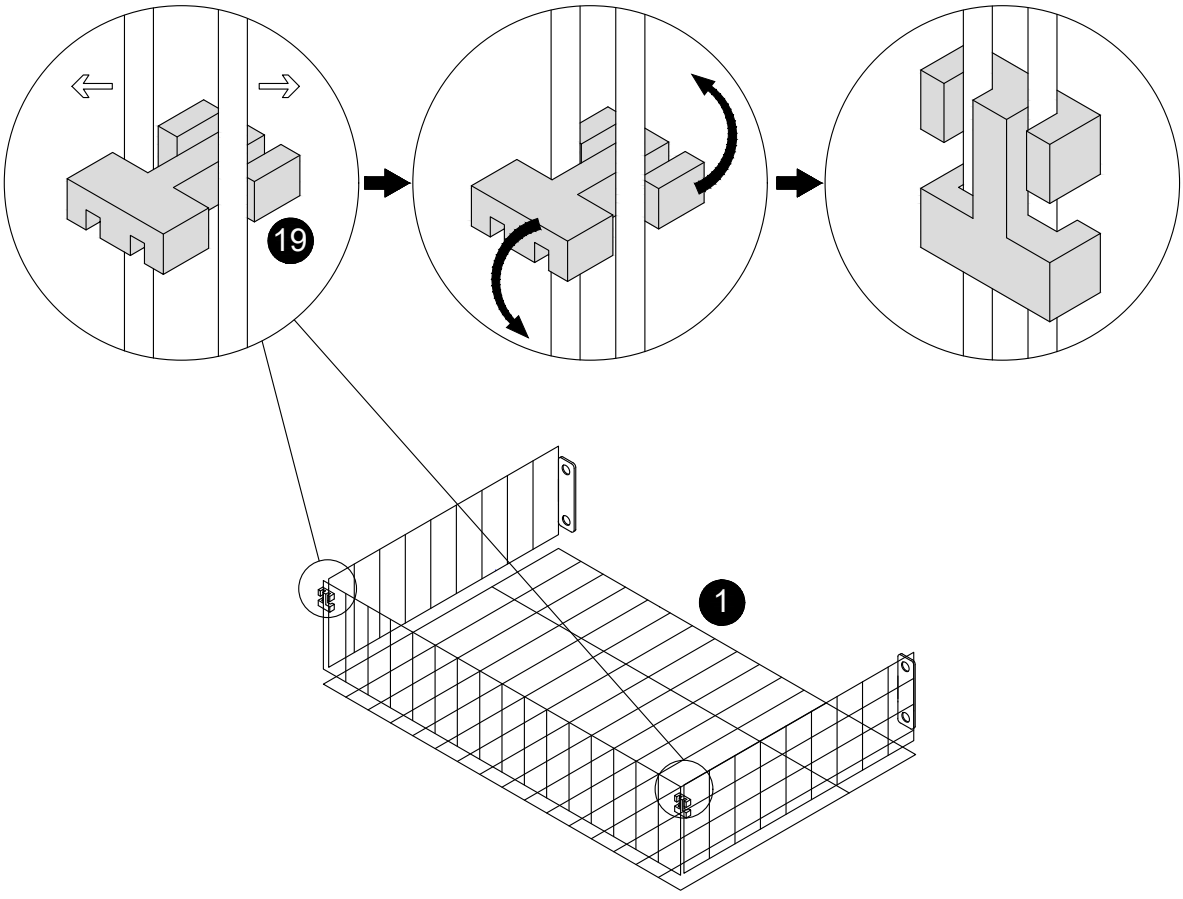

Assembly Instruction

18

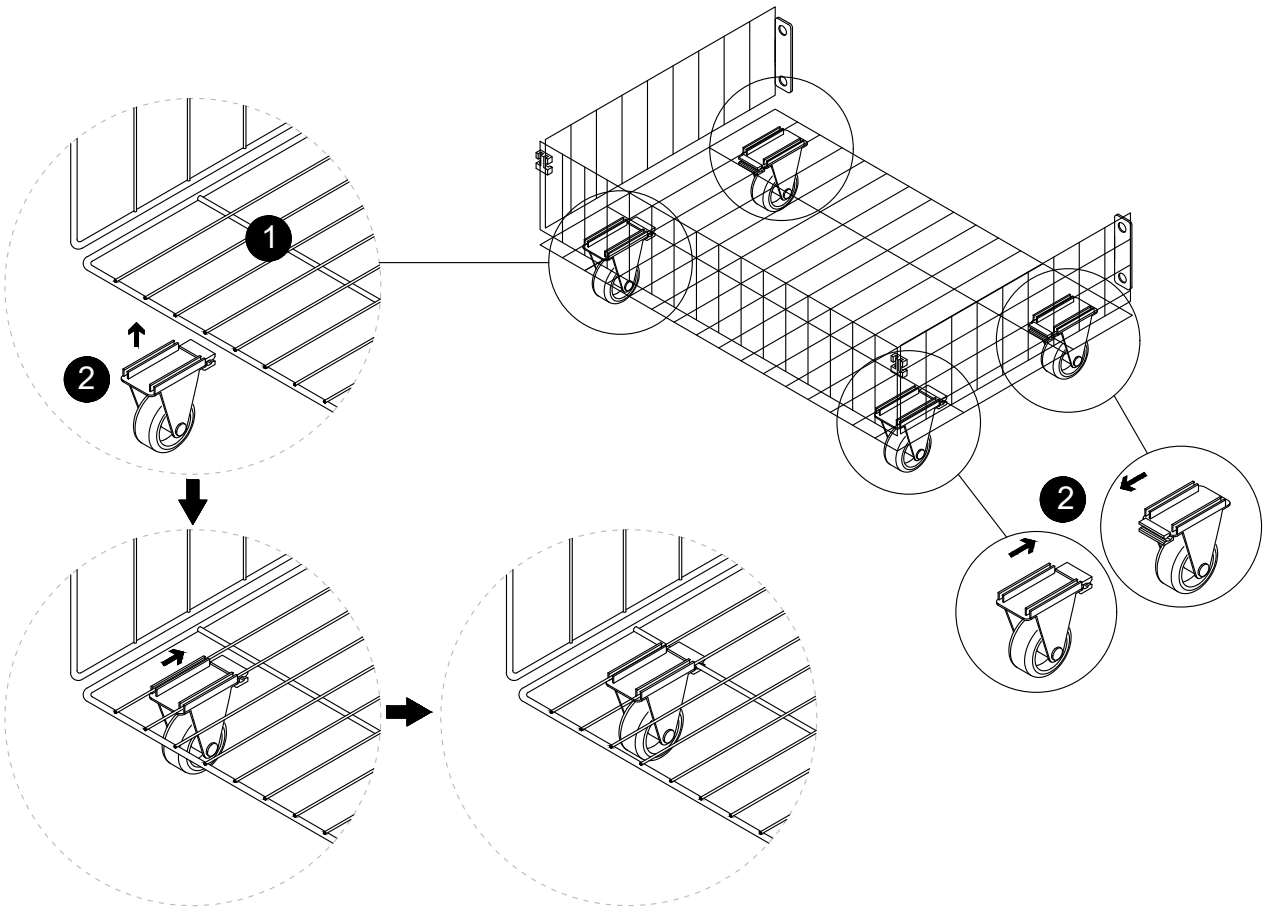

19

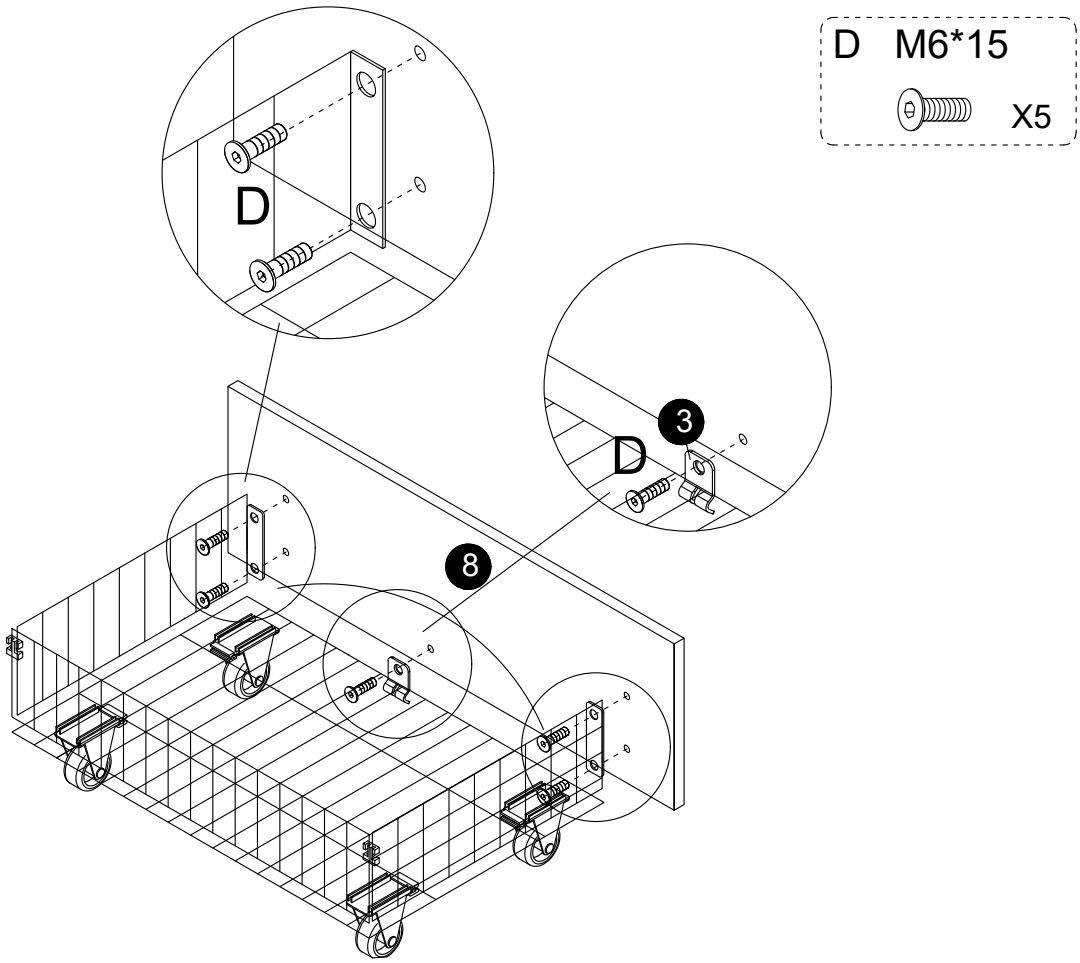

Assembly Instruction

20

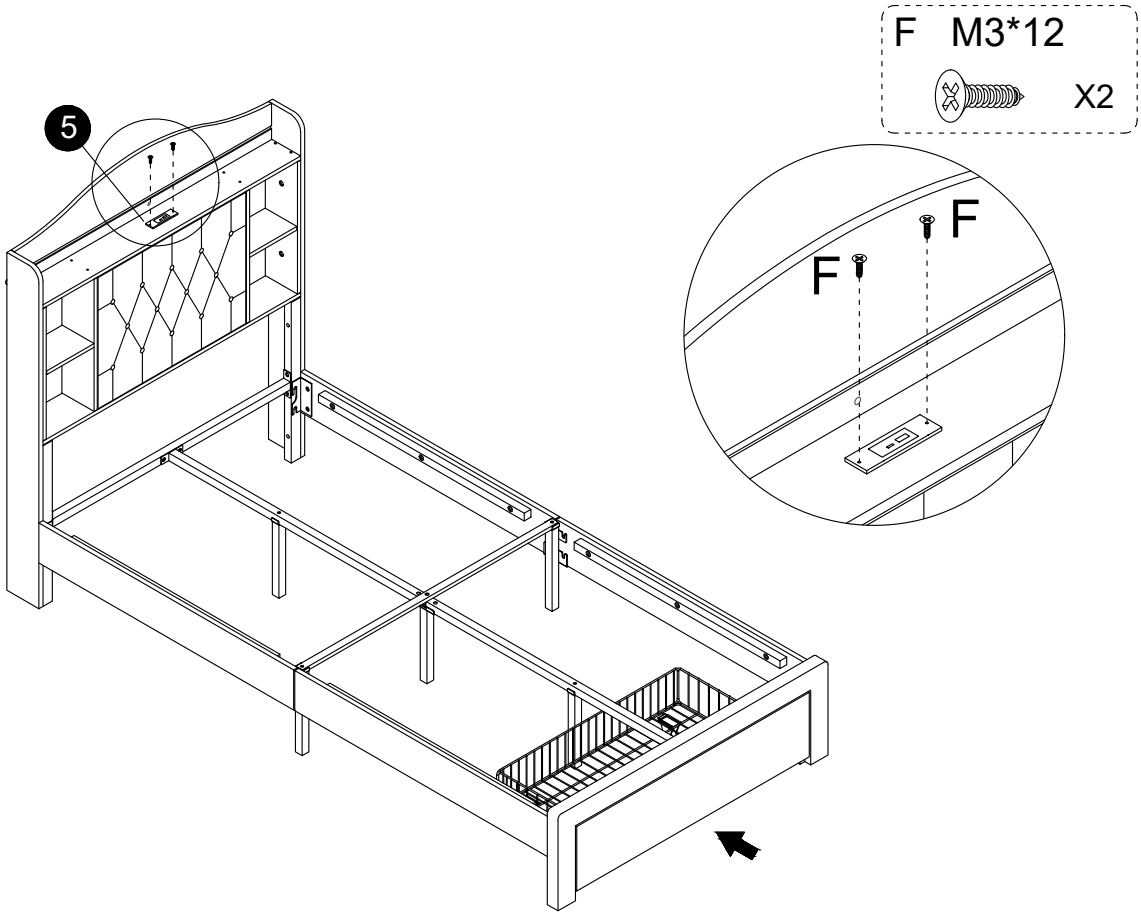

21

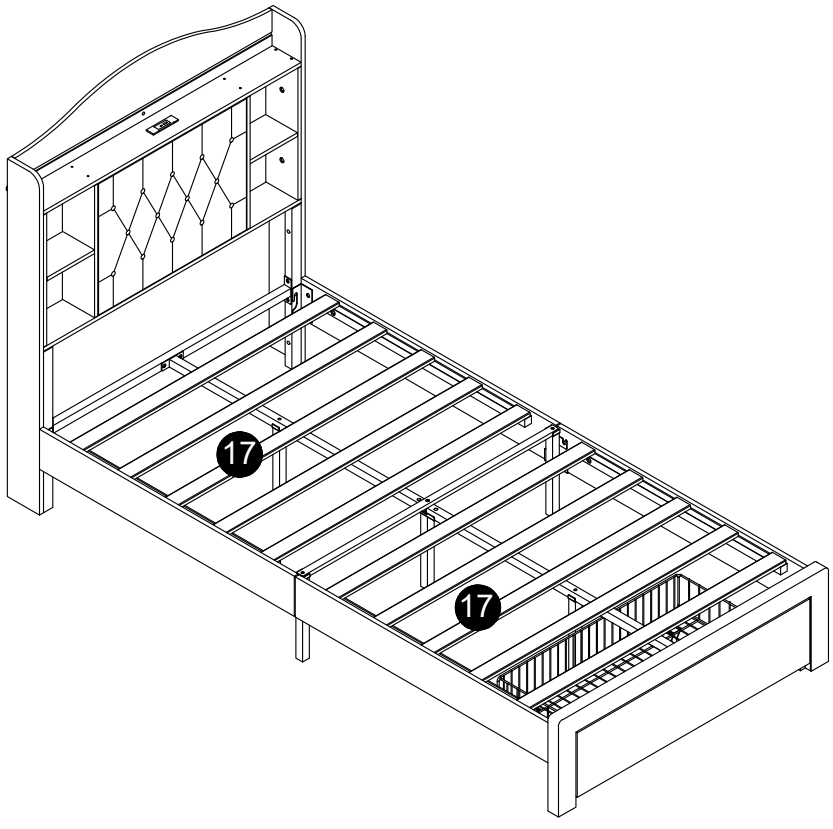

Assembly Instruction

22

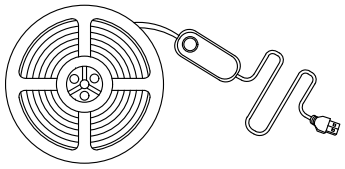

32 light bar X1

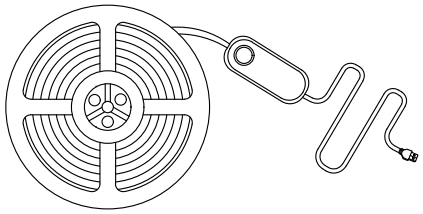

Light bar

Pull out
and unfold

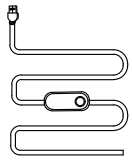

Light bar

The unfolded light strip has a light strip surface on one side and adhesive veneer on the other side

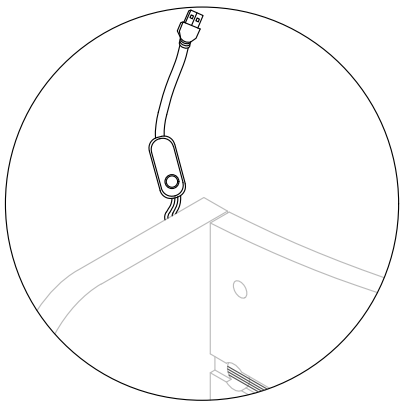

Just pull out the connector of the light strip from the back.

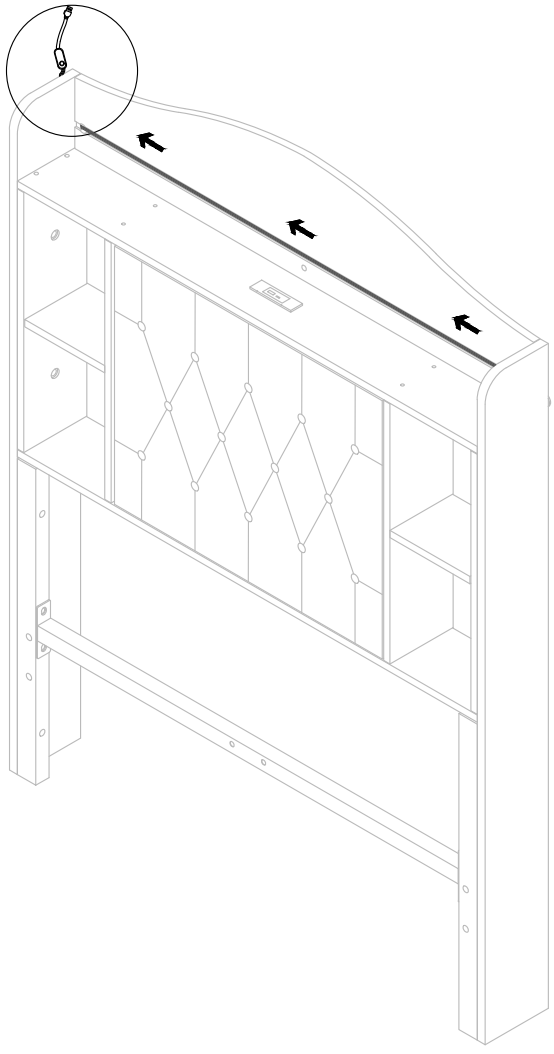

Please follow the instructions to attach the light strip to the board and exit from the holes in the rear panel.

Please note that the adhesive surface should be attached to the inner winding surface for optimal use.



- **KEEP** new and used batteries **OUT OF REACH of CHILDREN**
- **Seek immediate medical attention** if a battery is suspected to be swallowed or inserted inside any part of the body.



If a battery has been ingested, or there is a possibility one might have been ingested, please seek medical attention and inform the medical authorities that you suspect battery ingestion.

It's not always clear when a child has swallowed a button battery, as there are no specific symptoms. However, they might:

- cough, gag, or drool;
- seem to have a stomach bug or virus;
- vomit;
- complain of pain in their stomach, chest, or throat;
- appear tired or sluggish; and
- lose their appetite.

Since the signs aren't obvious, it's important to keep a close eye on loose, used, or spare button batteries in your home, as well as the products that contain them.

Importer	COMHARBOR LIMITED
Add	Unit C, Swift Point, Cosford Lane, Rugby, CV21 1PY,GB
Email	harborcomhar@gmail.com
Manufacturer	Guangdong Zhangong Electric Technology Co., LTD
Add	701, Building 29, Zhifuyuan Industrial Zone, Xingtan Town, Shunde District, Foshan City,Guangdong Province
Email/URL	nb@waktek.com.cn
Product identification	C110HWE20260604JQ
Made in	China
UK REP	COMHARBOR LIMITED Unit C, Swift Point,Cosford Lane,Rugby,CV21 1PY.GB harborcomhar@gmail.com
UK CA	Model No. : ZG-JJ , other details see attachment Technical data : 250 Vac, 50 / 60 Hz, other details see attachment

Certificate – Сертификат – 證明書 – Certificat – 증명서 – شهادة

Shenzhen ZKT Technology Co., Ltd.
1/F, No. 101, Building B, No. 6, Tangwei Community Industrial Avenue,
Fuhai Street, Bao'an District, Shenzhen, China

Certificate of Compliance

Certificate Number: ZKT-2405094943C

Certificate's Holder	:	**Shenzhen Pinchengxin Technology Co., Ltd 3rd Floor, 8th Building Yuanling Industrial Zone, No. 39 Yuanlingcun Road, Shiyan Street, Bao'an District, Shenzhen**
Manufacturer	:	**Shenzhen Pinchengxin Technology Co., Ltd 3rd Floor, 8th Building Yuanling Industrial Zone, No. 39 Yuanlingcun Road, Shiyan Street, Bao'an District, Shenzhen**
Trade Mark	:	**N/A**
Product	:	**5050 RGB LED Strip Lights with Bluetooth App Controller and 2.4G Remote**
Model(s)	:	**5050 RGB LED Strip Lights**

Test Standard	:	**Art.3.1(a)**	**Safety**	**BS EN IEC 62368-1:2020+A11:2020**
		Art.3.1(a)	**Health**	**BS EN IEC 62311:2020** **BS EN 50665:2017**
		Art.3.1(b)	**EMC**	**ETSI EN 301 489-1 V2.2.3 (2019-11)** **ETSI EN 301 489-17 V3.2.4 (2020-09)**
		Art.3.2	**Radio**	**ETSI EN 300 328 V2.2.2 (2019-07)**

This Attestation of Compliance is issued on a voluntary basis for electrical equipment below the voltage limits of Radio Equipment Directive (RED) SI 2017 No.1206. The essential requirement are fulfilled accordingly based on the technical specifications applicable at the time of issuance.

UK CA

Shenzhen ZKT Technology Co., Ltd.
APPROVED
Manager
May 14, 2024

This Certificate of Conformity is based on single evaluation of the submitted sample(s) of the above mentioned product. It does not imply an assessment of the whole product and relevant . Directives to be observed.

Attestation of Compliance

Attestation No.	:	**LCSA08094161E**
Approval Holder	:	**Shenzhen Pinchengxin Technology Co., Ltd**
Address	:	**3rd floor, 8 building Yuanling industrial zon, No. 39 Yuanlingcun road, Shiyan street, Bao'an district, Shenzhen**
Manufacturer	:	**Shenzhen Pinchengxin Technology Co., Ltd**
Address	:	**3rd floor, 8 building Yuanling industrial zon, No. 39 Yuanlingcun road, Shiyan street, Bao'an district, Shenzhen**
Brand Name	:	**N/A**
Product	:	**5050 RGB LED Strip Lights with Bluetooth App Controller**
Type/Model Name	:	**5050 RGB**
H/S Version	:	**HW: 1.0** **SW: 1.0**

Attestation of the technical design of the radio equipment according to the following essential requirements set out in article 3 of the RED 2014/53/EU:

Article 3.1a): Health and Safety	**Conform**
Article 3.1b): Electromagnetic Compatibility	**Conform**
Article 3.2: Effective Use of the Radio Spectrum	**Conform**

CE-marking

Marking Example (Class 1)

CE

This attestation is issued in accordance with the Directive 2014/53/EU of the European Parliament and of the Council of 16 April 2014 on the harmonisation of the laws of the Member States relating to the making available on the market of radio equipment.

LCS TESTING LABORATORY APPROVED

September 18, 2024

Date of issue

Manager

Shenzhen LCS Compliance Testing Laboratory Ltd.
Room 101, 201, Building A and Room 301, Building C, Juji Industrial Park, Yabianxueziwei, Shajing Street, Bao'an District, Shenzhen, Guangdong, China
Tel: (86)0755-82591330 Fax: (86)0755-82591332
Http://www.lcs-cert.com Email: webmaster@lcs-cert.com

Certificate of Compliance

Certificate No.: AiTSZ-250710061RC09

The EUT described above has been consolidated by us and found in compliance with the council RoHS 2.0 Directive(EU)2015/863and(EU)2017/2102 amending Annex I to Directive2011/65/EU.

Applicant	:	Shenzhen Pinchengxin Technology Co., Ltd
Address	:	3rd floor, 8 building Yuanling industrial zon, No. 39 Yuanlingcun road, Shiyan street, Bao'an district, Shenzhen
Manufacturer	:	Shenzhen Pinchengxin Technology Co., Ltd
Address	:	3rd floor, 8 building Yuanling industrial zon, No. 39 Yuanlingcun road, Shiyan street, Bao'an district, Shenzhen
Product	:	5050 RGB LED Strip Lights with Bluetooth App Controller
Model No.	:	LED 5050 RGB
Trade mark	:	N/A
Test Report No.	:	AiTSZ-250710061R

Test Standards：
IEC 62321-3-1: 2013
IEC 62321-4:2013+AMD1:2017 CSV
IEC 62321-5:2013
IEC 62321-6:2015
IEC 62321-7-1:2015
IEC 62321-7-2:2017
IEC 62321-8:2017

RoHS

Lizhen

Lizhen

Date：Jul.18, 2025

GUANGDONG ASIA HONGKE TEST TECHNOLOGY LIMITED · AiT · APPROVED

The statement is based on a single evaluation of one sample of above mentioned products. It does not imply an assessment of the whole production and does not permit the use of the test lab logo.

Guangdong Asia Hongke Test Technology Co.,Ltd.
B1/F, Building 11, Junfeng Industrial Park, Chongqing Road, Heping Community, Fuhai Street, Bao'an District, Shenzhen, Guangdong, China
Tel:+86. 0755-23096763
https://www.aitek.org.cn
E-mail:info@aitek.org.cn

VERIFICATION OF CONFORMITY

Registration No.	:	**WTN25N04079438**
Reference No.	:	**WTN25N04079438E**
Applicant	:	**Guangdong Zhangong Electric Technology Co., LTD**
Address	:	**701, Building 29, Zhifuyuan Industrial Zone, Xingtan Town, Shunde District, Foshan City,Guangdong Province**
Manufacturer	:	**Same as applicant**
Address	:	**Same as applicant**
Product	:	**Furniture socket**
Model No.	:	**ZG-USB-O01A, other details see attachment**
Technical data	:	**250 Vac, 50 / 60 Hz, other details see attachment**

Test Standards:

EN 55032:2015+A1:2020
EN 55035:2017+A11:2020
EN IEC 61000-3-2:2019+A1:2021+A2:2024
EN 61000-3-3:2013+A1:2019+A2:2021

The above product has been tested by us with the listed standards and found in compliance with the European Electromagnetic Compatibility Directive 2014/30/EU. It is possible to use CE marking to demonstrate the compliance with this EMC Directive.

EN 55032: Electromagnetic compatibility of multimedia equipment - Emission Requirements
EN 55035: Electromagnetic compatibility of multimedia equipment - Immunity requirements
EN IEC 61000-3-2: Electromagnetic compatibility (EMC) - Part 3-2: Limits - Limits for harmonic current emissions (equipment input current ≤ 16 A per phase)
EN 61000-3-3: Electromagnetic compatibility (EMC) -Part 3-3: Limits -Limitation of voltage changes, voltage fluctuations and flicker in public low-voltage supply systems, for equipment with rated current ≤16 A per phase and not subject to conditional connection

The referred test report(s) show that the product complies with standard(s) recognized as giving presumption of compliance with the essential requirements in the above mentioned EU Directive. Other relevant Directives have to be observed.

After preparation of the necessary technical documentation as well as the EU Declaration of Conformity, the CE marking as shown below can be affixed on the equipment under the sole responsibility of the manufacturer.

CE

Manager: Jianzhong Mao
Date: 2025-06-09

The statement is based on a single evaluation of the sample of above mentioned product. It does not imply an assessment of the whole production.

Waltek Testing Group (Ningbo) Co., Ltd.

Hotline: 400-840-2288 E-mail: nb@waltek.com.cn
Http://www.waltek.com.cn

Ver.10.24, WALTEK is registered trademark. Utilisation and application requires prior approval.

ERIFICATION OF CONFORMITY

Attachment

Model list

Reference No: WTN25N04079438E

No.	Model	Rated Input	Rated Output Voltage	Max Output Current	Max Power
1.	ZG-USB-O01A	250 Vac, 50 / 60 Hz	5 Vdc	2.1 A	10 W
2.	ZG-USB-Y01A	250 Vac, 50 / 60 Hz	5 Vdc	2.1 A	10 W
3.	ZG-USB-O02A	250 Vac, 50 / 60 Hz	5 Vdc	2.1 A	10 W
4.	ZG-USB-Y02A	250 Vac, 50 / 60 Hz	5 Vdc	2.1 A	10 W
5.	ZG-USB-O01B	250 Vac, 50 / 60 Hz	5 Vdc	2.1 A	10 W
6.	ZG-USB-Y01B	250 Vac, 50 / 60 Hz	5 Vdc	2.1 A	10 W
7.	ZG-USB-O02B	250 Vac, 50 / 60 Hz	5 Vdc	2.1 A	10 W
8.	ZG-JJ/12A/15A	250 Vac, 50 / 60 Hz	5 Vdc	2.0 A	10 W

Declaration of Conformity
(DoC)

SI 2012 No. 3032 and its amendment The Restriction of the Use of Certain Hazardous Substances in Electrical and Electronic Equipment Regulations.

The certificate applies to the tested sample following mentioned only and shall not imply an assessment of the whole production, It is only valid in connection with the test report number.

Report No.	:	XNO260105301CX2-1
Certificate No.	:	XNO260105301CX2-1C
Applicant	:	Guangdong Zhangong Electric Technology Co., LTD
Address	:	701, Building 29, zhifuyuan Industrial Zone, Xingtan town, Shunde District, Foshan City, Guangdong Province
Product name	:	Furniture socket
Model No.	:	ZG-JJY-1UK to -8UK
Sub-Model No.	:	ZG-JJY-2, ZG-JJM/12A/15A, ZG-JJM, LH-D, ZG-JJM-A2, ZG-JJM1-A2
Manufacturer	:	Guangdong Zhangong Electric Technology Co., LTD
Address	:	701, Building 29, zhifuyuan Industrial Zone, Xingtan town, Shunde District, Foshan City, Guangdong Province
Test method	:	BS EN 62321-3-1:2014 & BS EN 62321-5:2014 & BS EN 62321-4:2014+A1:2017& BS EN 62321-7-1:2015 & BS EN 62321-7-2:2017 & BS EN 62321-6:2015 & BS EN 62321-8:2017

UKCA

Signature :.....

Technical supervisor

Signed for and on behalf of

Guangzhou Supreme Technology & Testing Service Co., Ltd

09-Jan-2026

This certification is part of the full test report(s) and should be read in conjunction with it. The certificate is based on a single evaluation of one sample of above-mentioned products. It does not imply an assessment of the whole production and does not permit the use of the test lab logo.

Guangzhou Supreme Technology & Testing Service Co., LTD

103, NanSha IT Park, South Tower, No.2 Huanshi Dadao Nan, NanSha District, GuangZhou City, GuangDong Province.China

Tel: 020-39004143 Fax: 020-39390517 Email: service@xnotesting.com Website: http://www.xnotesting.com

CERTIFICATE OF COMPLIANCE

Certificate of Compliance

Certificate Number: BOKE-251211103C01

Certificate's Holder **Zertifikatsinhaber**	:	**Guangdong Zhangong Electric Technology Co., LTD** **701, Building 29, zhifuyuan Industrial Zone, Xingtan town, Shunde District, Foshan City, Guangdong Province**
Manufacturer **Hersteller**	:	**Guangdong Zhangong Electric Technology Co., LTD** **701, Building 29, zhifuyuan Industrial Zone, Xingtan town, Shunde District, Foshan City, Guangdong Province**
Trade Mark **Warenzeichen**	:	**/**
Product **Produkt**	:	**Mountable USB Hub/USB CHARGER**
Model(s) **Bezeichnung**	:	**ZG-USB-12-B** **ZG-USB-12, ZG-USB-12-C,ZG-JJY-1UK to -8UK, ZG-JJ/12A/15A, ZG-JJM/12/15A**
Test Standard **Geprüft nach**	:	**IEC 62321-3-1:2013, IEC 62321-4:2013+A1:2017, IEC 62321-5:2013, IEC 62321-6:2015, IEC 62321-7-1:2015, IEC 62321-7-2:2017, IEC 62321-8:2017**
Test Report No. **Bericht Nr**	:	**BOKE-251211103C01**

The EUT described above has been consolidated by us and found in compliance with the council RoHS Directive 2011/65/EU Annex II amending Annex (EU)2015/863.The essential requirements are fulfilled accordingly based on the technical specifications applicable at the time of issuance. It is only valid in connection with the test report.

After preparation of the necessary technical documentation according the Requirement of EN IEC 63000:2018 as well as the verification of conformity the CE marking as shown below can Be affixed on the equipment.

CE

Manager

Dec. 17, 2025

Shenzhen Boke Testing Co., Ltd.
Address: 501, Building 1, No. 21, Lianteng Road, Loucun Community, Xinhu Street, Guangming District, Shenzhen, Guangdong, China
Web: http://www.boke-lab.com E-mail: admin@boke-lab.com Tel: 0755-23056504