WINE CABINET

Assembly Instructions-Please keep for future reference

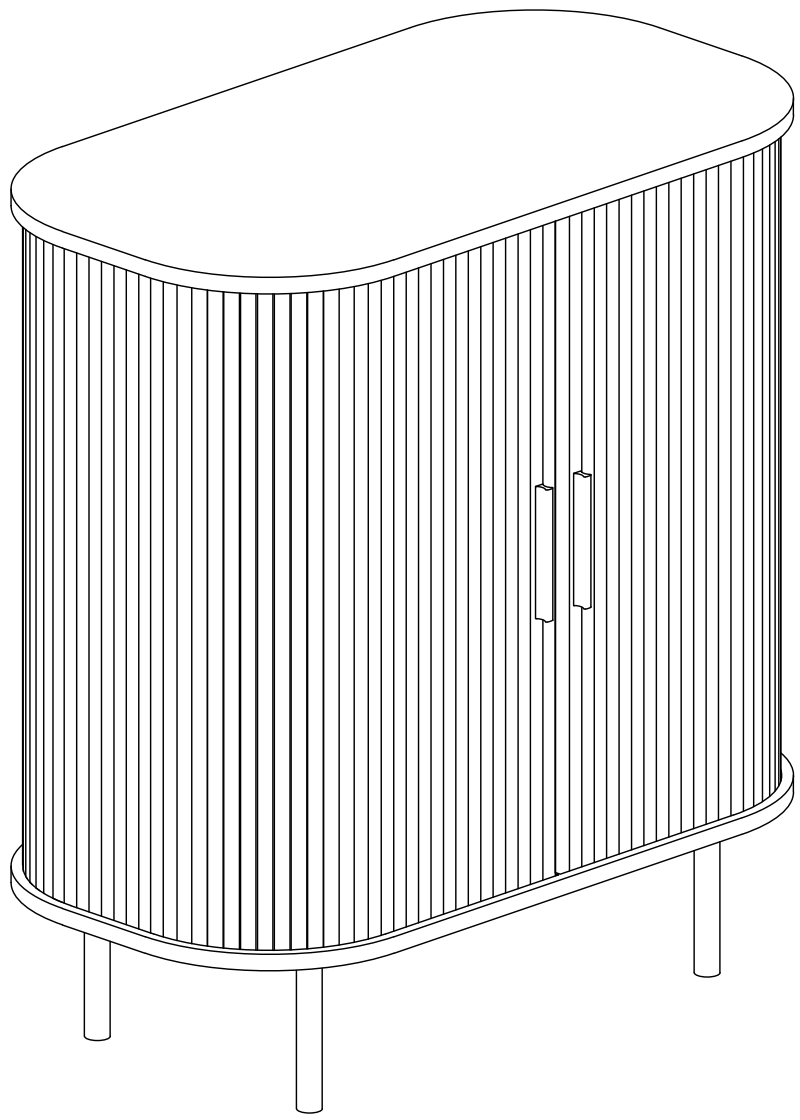



Important -Please read these instructions fully before starting assembly

Safety and Care Advice

Important - Please read these instructions fully before starting assembly

. Check you have all the components and tools listed on the following pages.

. Remove all fittings from the plastic bags and separate them into their groups.

. Keep children and animals away from the work area, small parts could choke if swallowed.

. Make sure you have enough space to layout the parts before starting.

. During assembly do not stand or put weight on the product, this could cause damage.

. Assemble the item as close to its final position (in the same room)as possible.

. Assemble on a soft level surface to avoid damaging the unit or your floor.

. Parts of the assembly will be easier with 2 people.

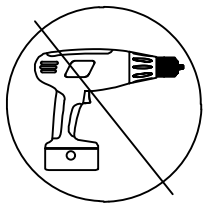

.To reduce the likelihood of damaging your product please ensure that your power drill is set on a low torque setting.

Care and maintenance

. Only clean using a damp cloth and mild detergent, do no use bleach or abrasive cleaners.

. From time to time check that there are no loose screws on this unit.

. This product should not be discarded with household waste. Take to your local authority waste disposal centre.

Handy Hints

. Assemble all parts and bolts loosely during assembly,only once the product is complete should you fully tighten the bolts

. Regularly check and ensure That all bolts and fittings are tightened properly.

WARNING
In order to help prevent overturning - please follow these instructions

To help prevent product toppling over please follow the below steps:-

Use the anti tip stap or wall fixing method provided (if applicable)
Do not allow children to climb or hang on the furniture
Do not open more than one drawer at a time
Do not place heavy items in the top drawers
Do not place heavy items on top of the furniture, unless the furniture has been designed for this purpose

Please note that only the anti tip strap is provided.
You will need to provide wall plugs and screws applicable for your wall type

Components - Fittings

Please check you have all the panels listed below

Note:The quantitie below are the correcet amount to complete the assembly. In some cases more fittings may be supplied than are required.

A	x24
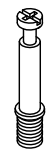	
Ø6x35mm	

B	x24
	
Ø15x9mm	

C	x16
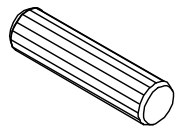	
Ø6x30mm	

D	x8
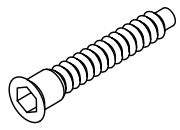	
Ø5x38mm	

E	x20
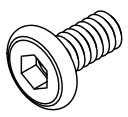	
M6x12mm	

F	x2
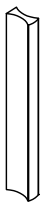	

G	x4
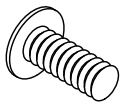	
M4x8mm	

H	x4
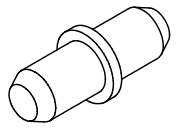	
Ø5x13.5mm	

I	x8
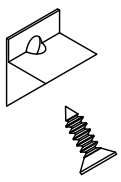	

J	x1
	
M4	

K	x1
	
M3	

L	x1
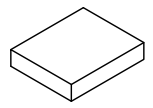	

M	x2
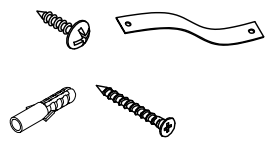	

Using Camlocks

Step 1

Connect the camlock
as diected in the assembly
Instructlons using a
scewdriver.

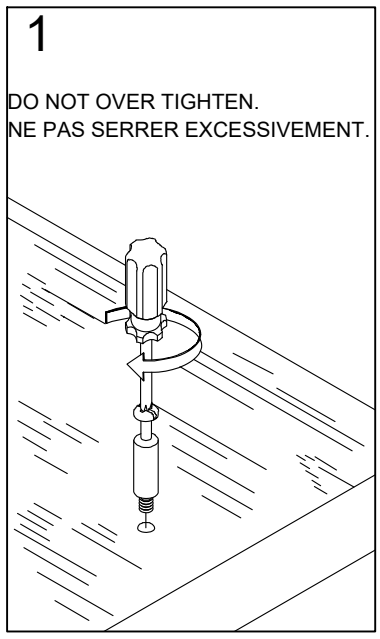

Step 2

Push the male camlock
Into the entry hole.

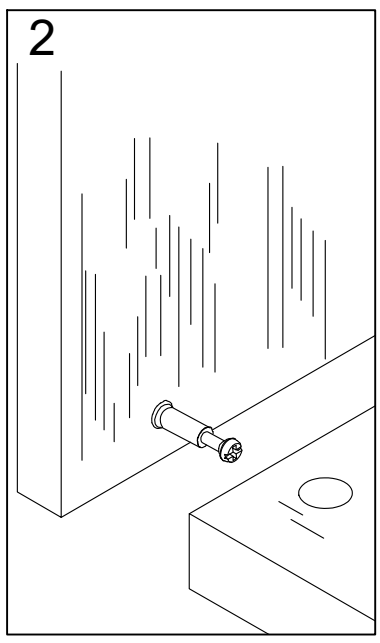

Step 3

Insert the female camlock as
shown In the instruction.

Note: ensure that the arrow
on the top of the camlock
points towards he entry hole
for the male camlock.

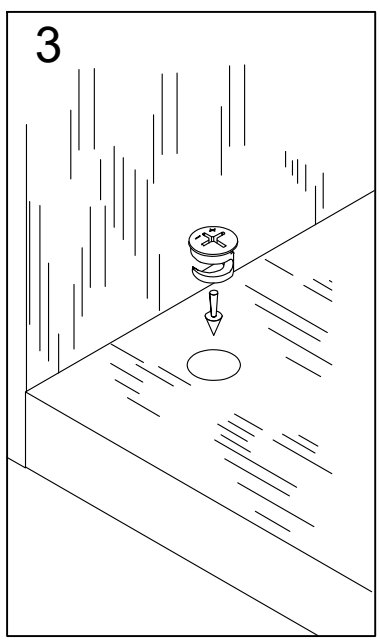

Step 4

Turn the female camlock
clockwlse wlth a
screwdriver.

You should feel a cllck
when the camlock is
locked in place.

The jolnt Is now secure.

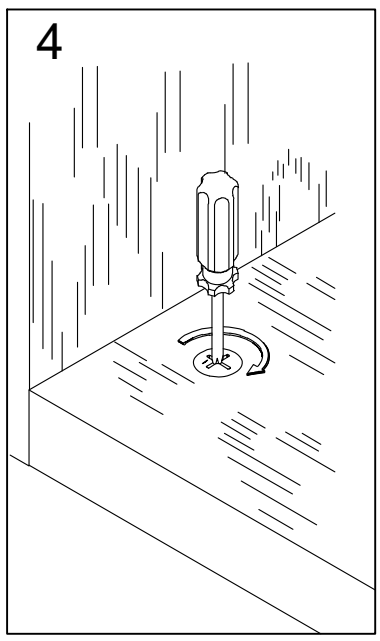

Parts list

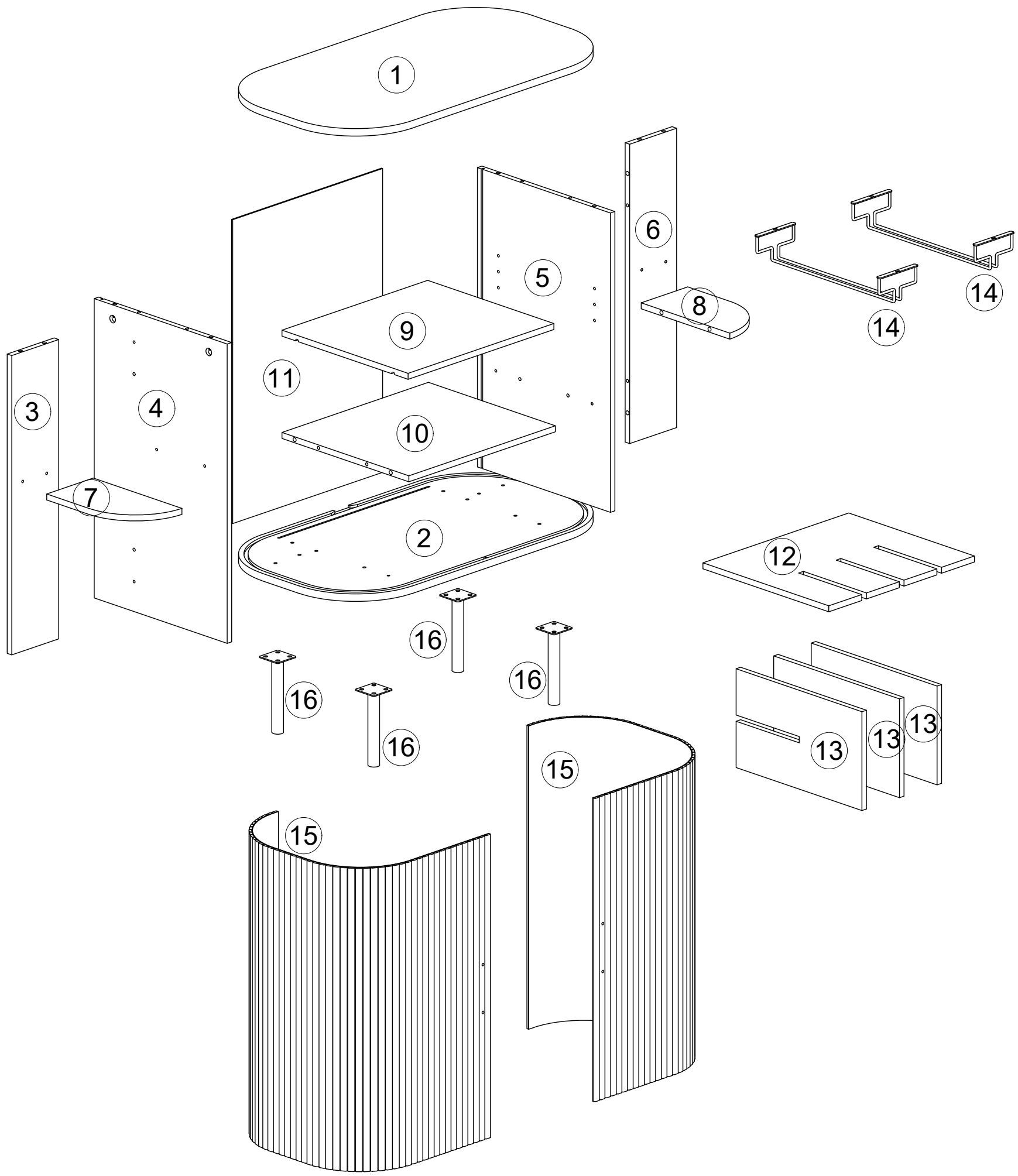

1 x1 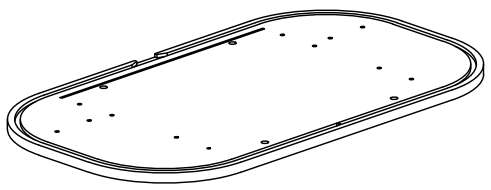	2 x1 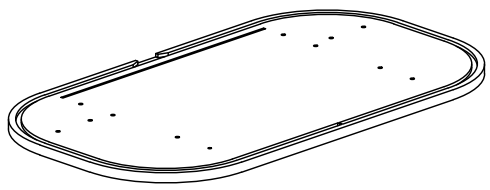
3 x1 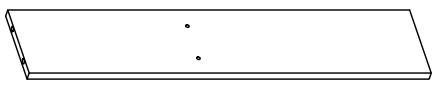	4 x1 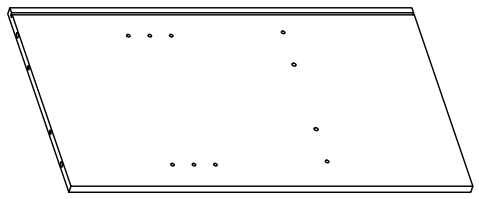
5 x1 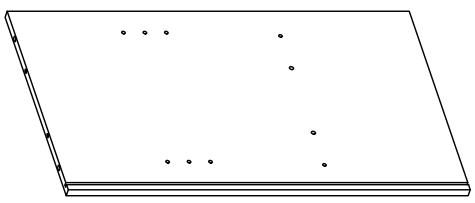	6 x1 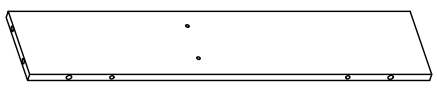
7 x1 	8 x1 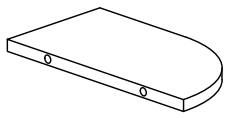
9 x1 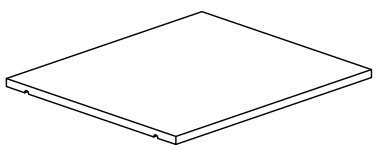	10 x1 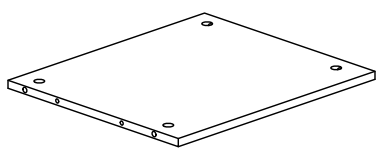
11 x1 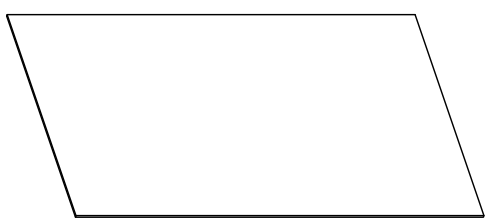	12 x1 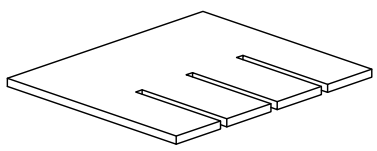
13 x3 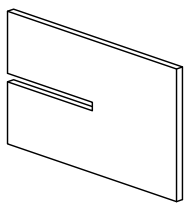	14 x2 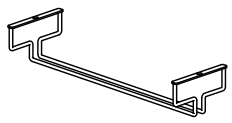
15 x2 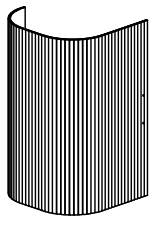	16 x4 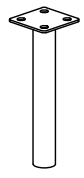

1

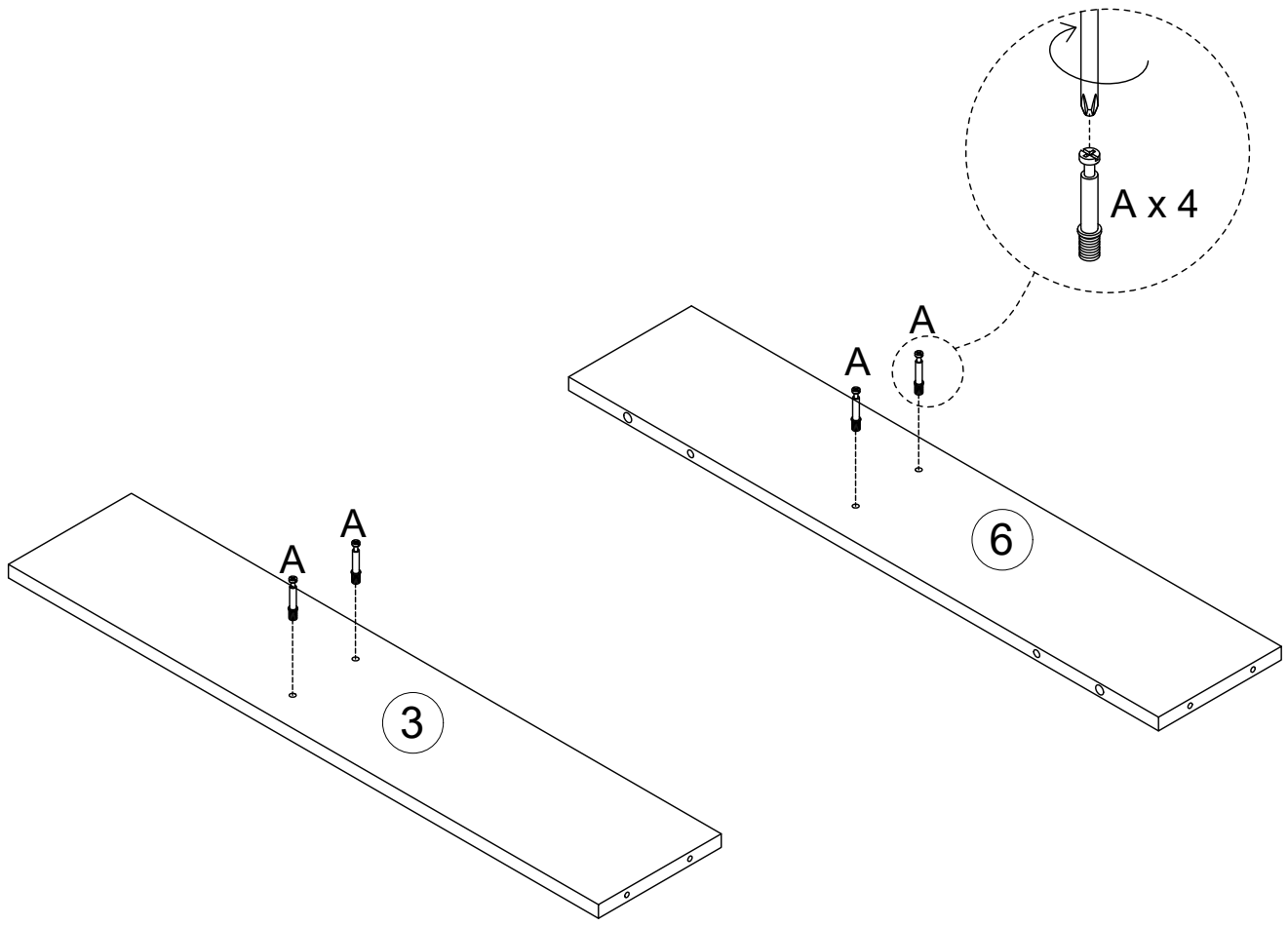

A	x4
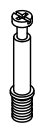	
Ø6x35mm	

2

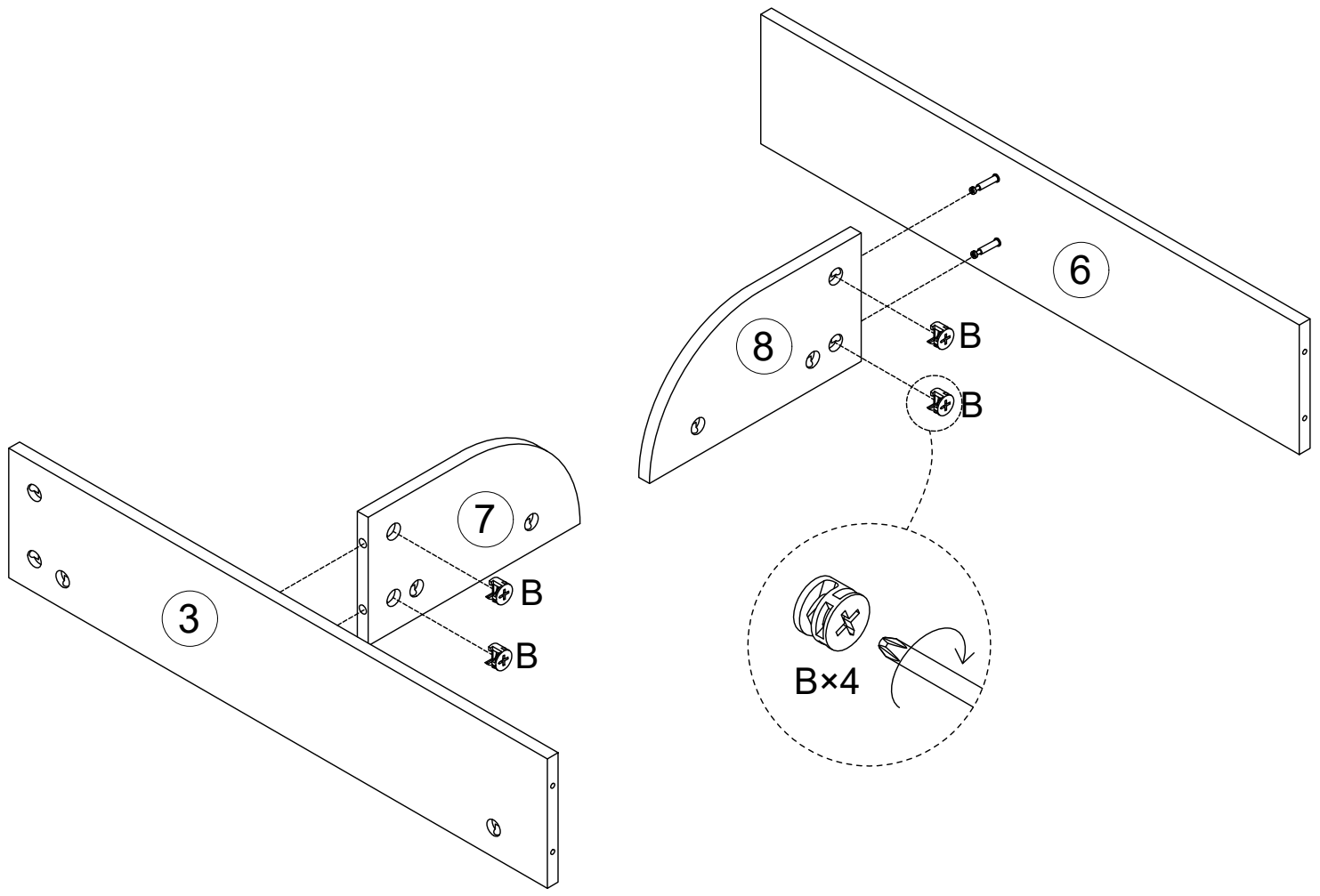

B	x4
	
Ø15x9mm	

3

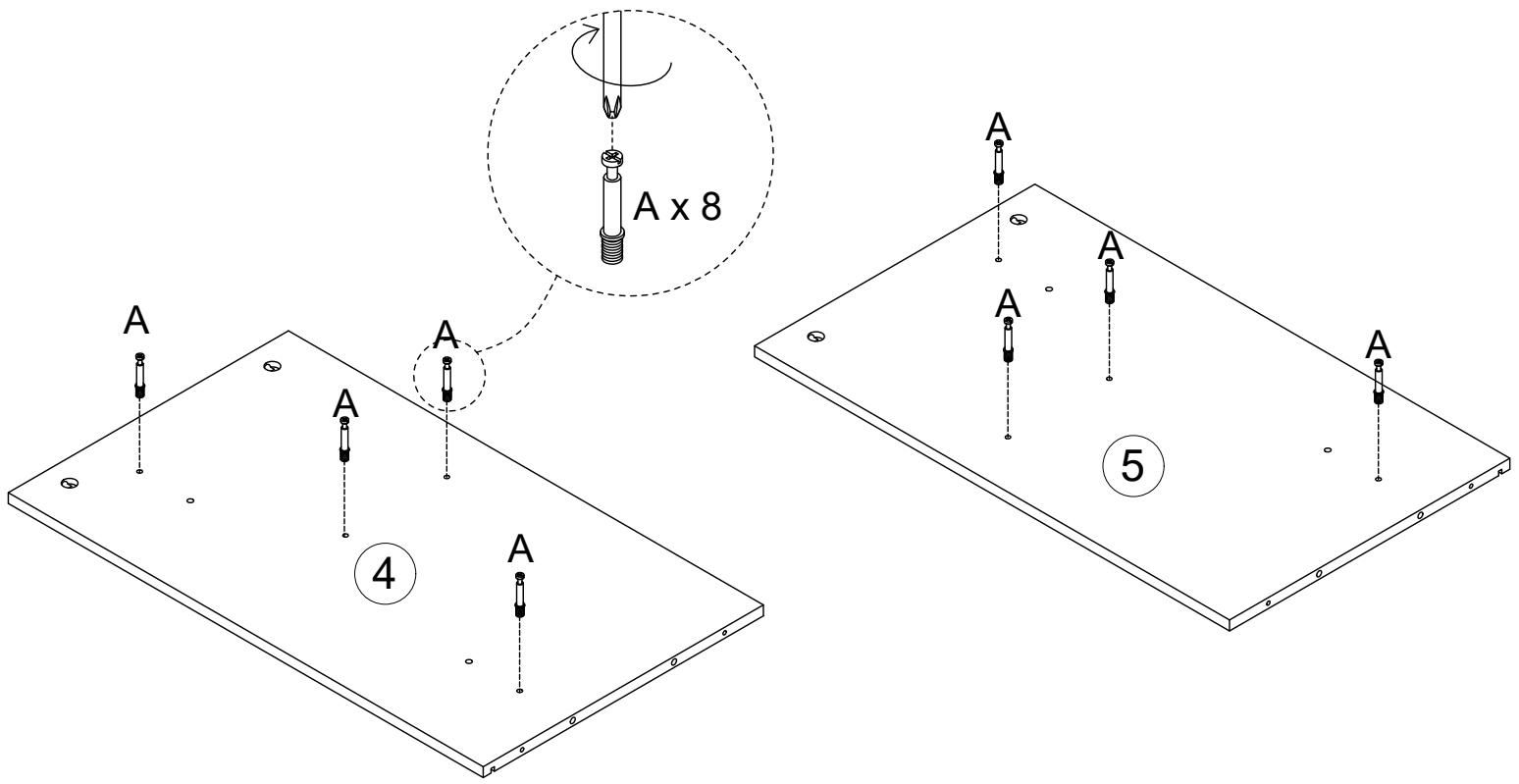

A	x8
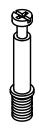	
Ø6x35mm	

4

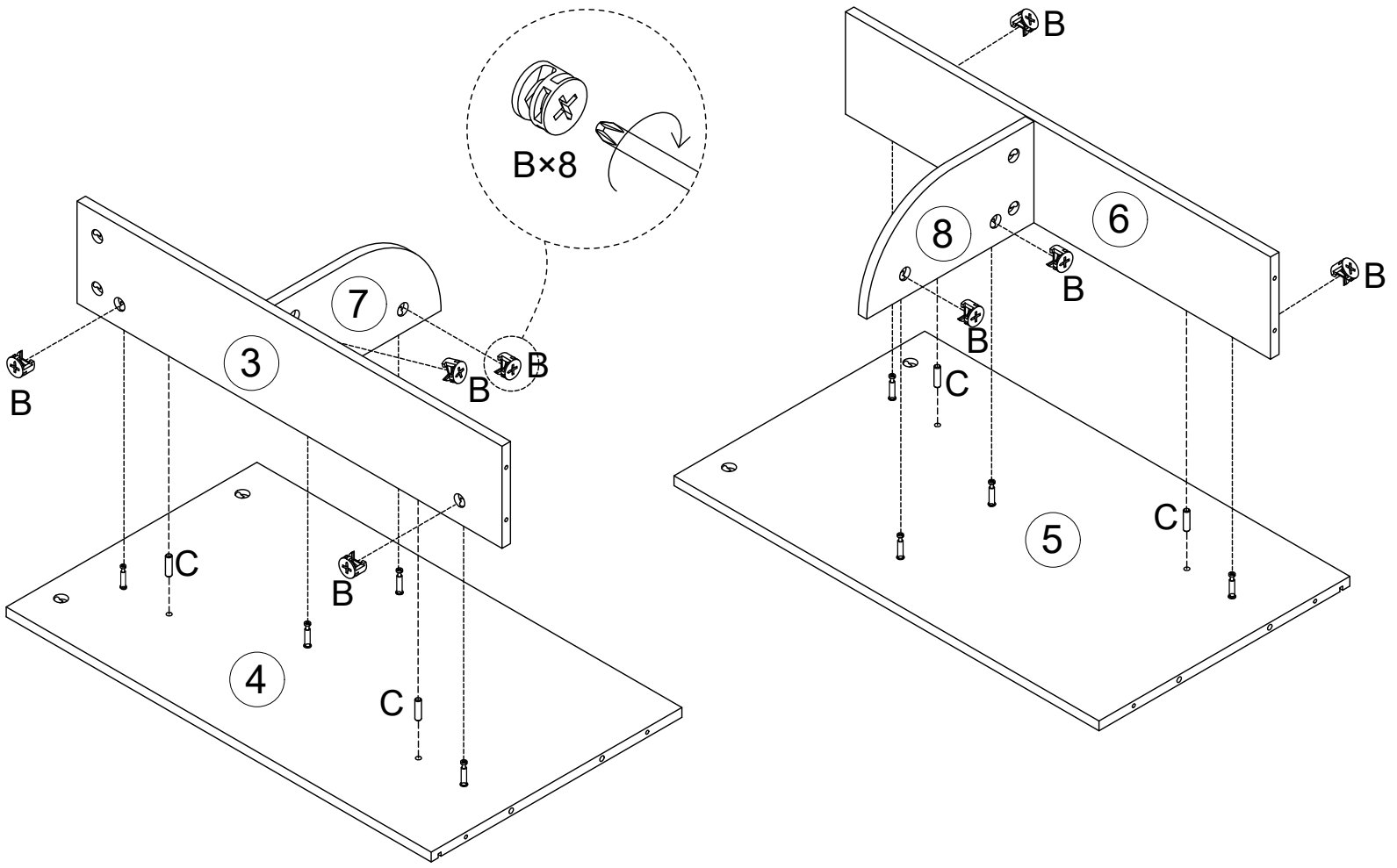

B	x8	C	x4
		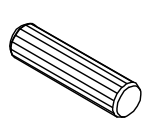	
Ø15x9mm		Ø6x30mm	

5

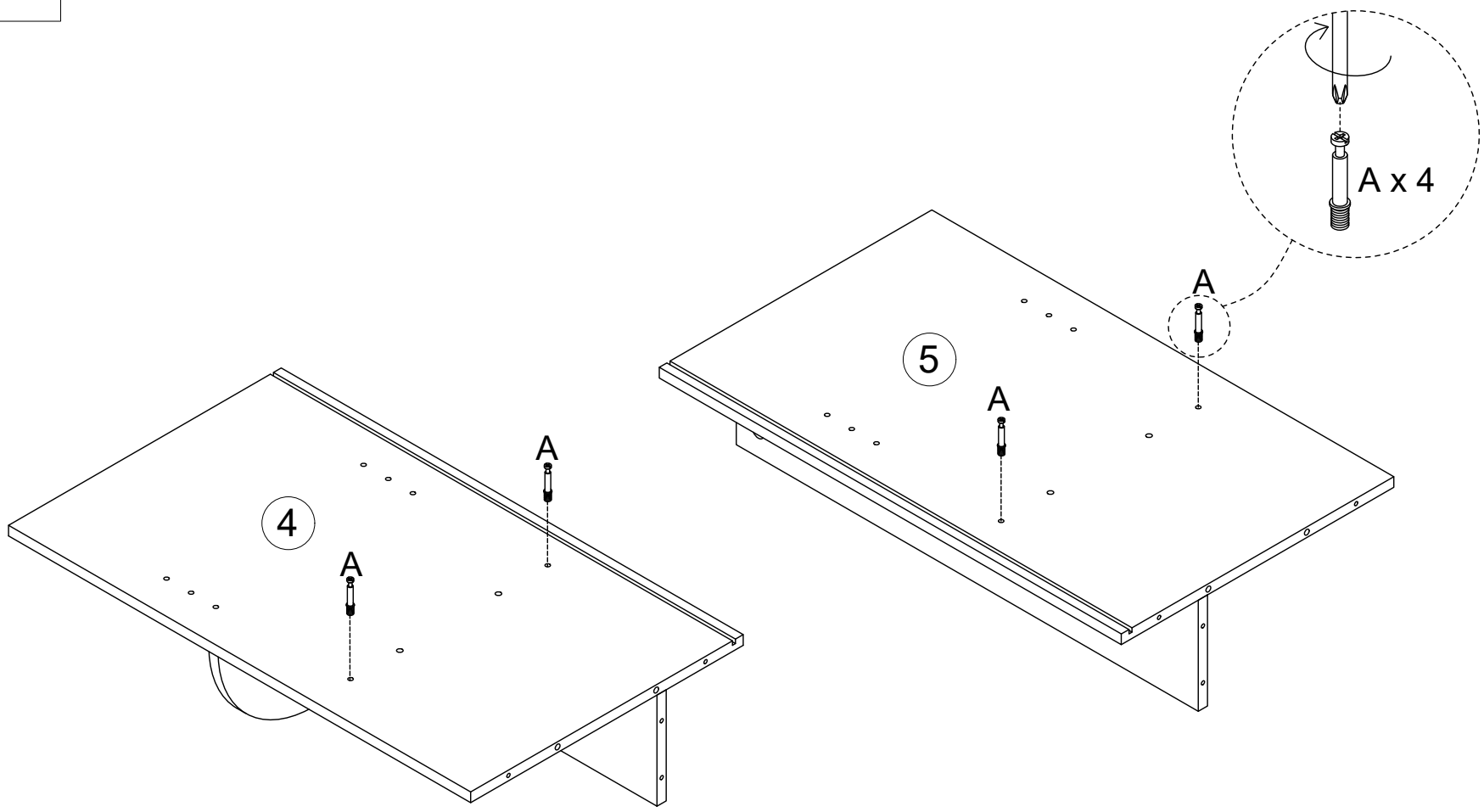

A	x4
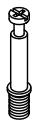	
Ø6x35mm	

6

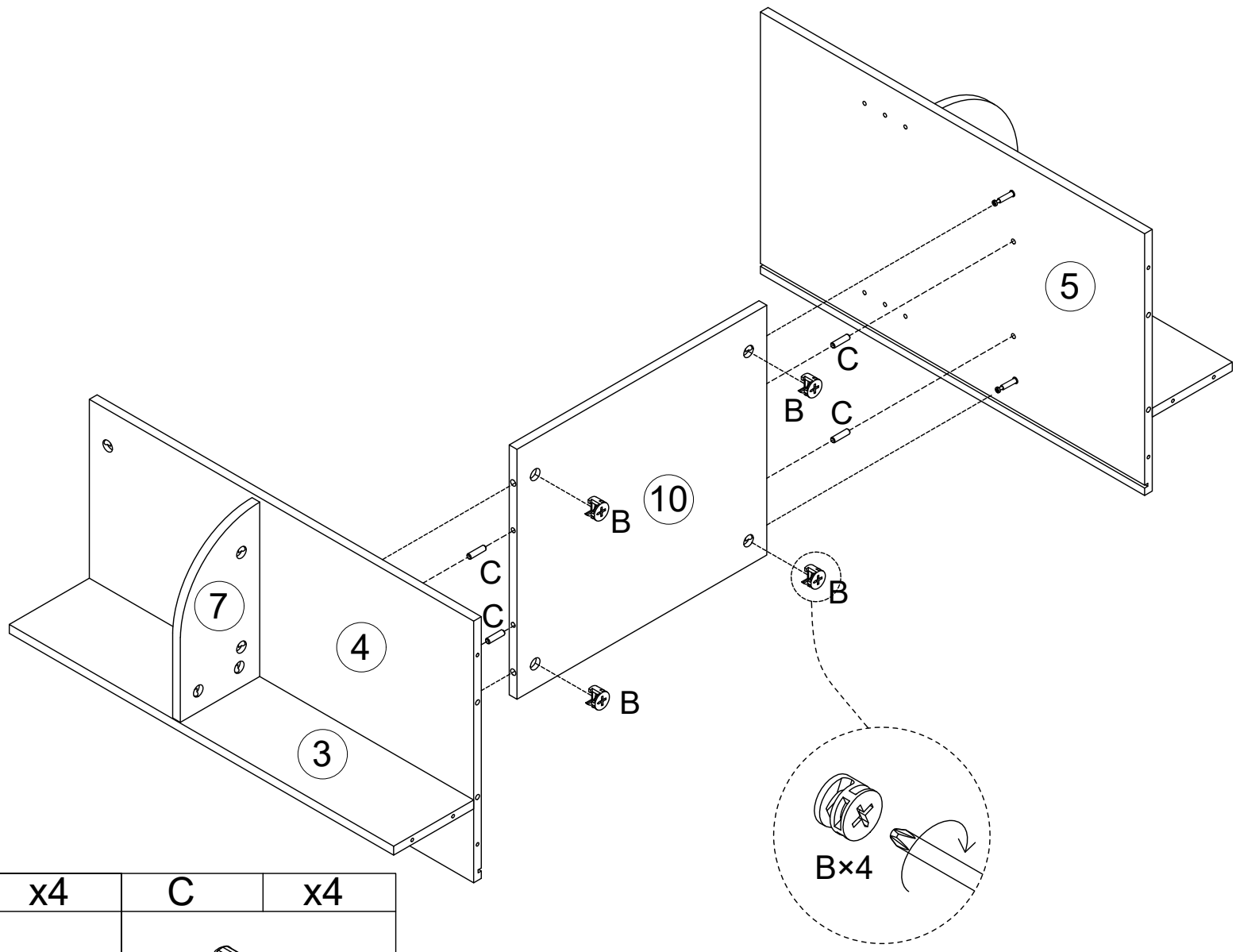

B	x4	C	x4
		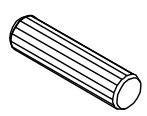	
Ø15x9mm		Ø6x30mm	

7

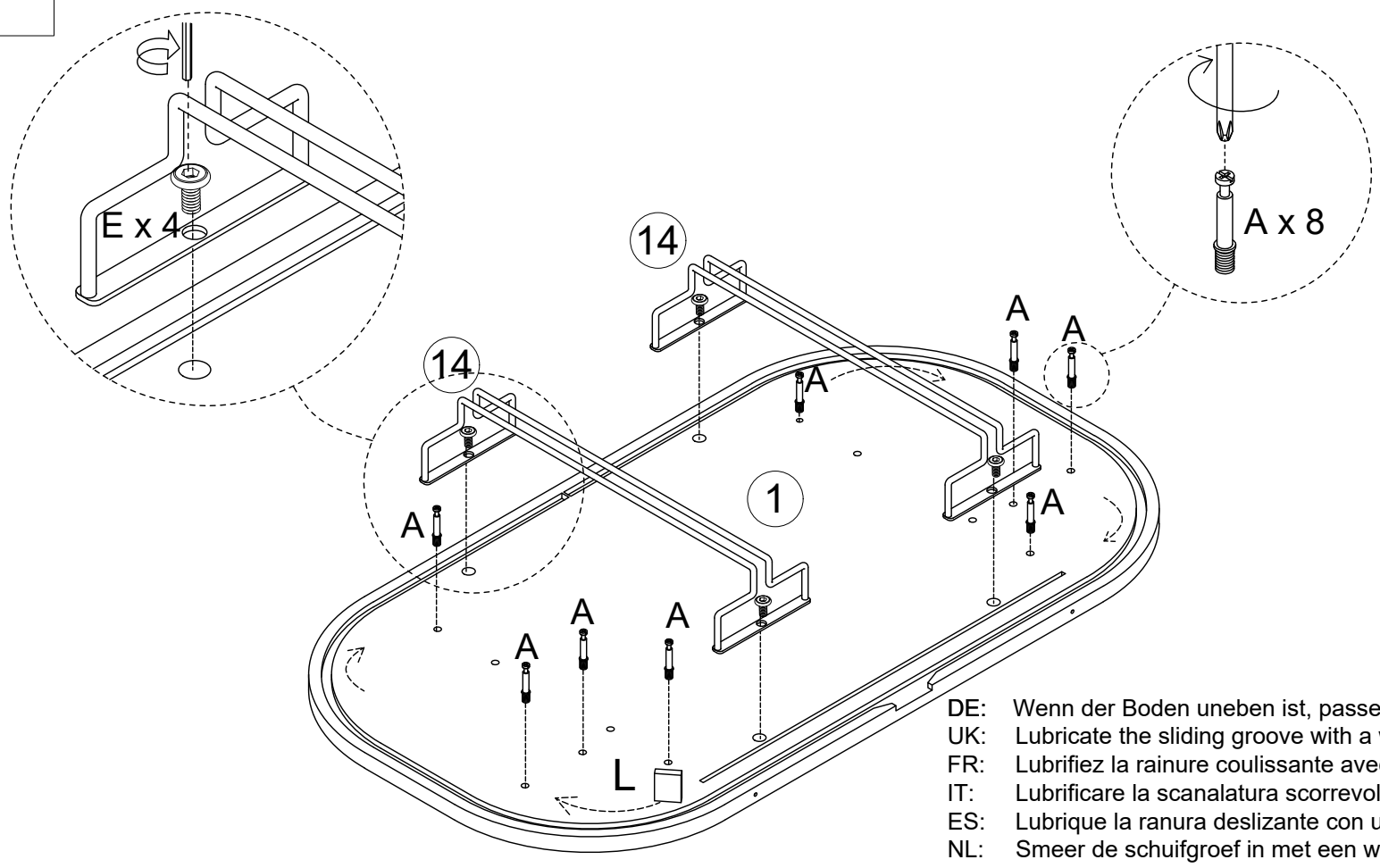

DE: Wenn der Boden uneben ist, passen Sie die Einstellfußpolster
UK: Lubricate the sliding groove with a wax block.
FR: Lubrifiez la rainure coulissante avec un bloc de cire.
IT: Lubrificare la scanalatura scorrevole con un blocchetto di cera.
ES: Lubrique la ranura deslizante con un bloque de cera.
NL: Smeer de schuifgroef in met een wasblok.
SE: Smörj glidspåret med ett vaxblock.
PL: Nasmaruj rowek ślizgowy blokiem wosku.

A	x8	E	x4	L	x1	J	x1
				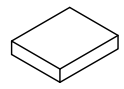			
Ø6x35mm		M6x12mm				M4	

8

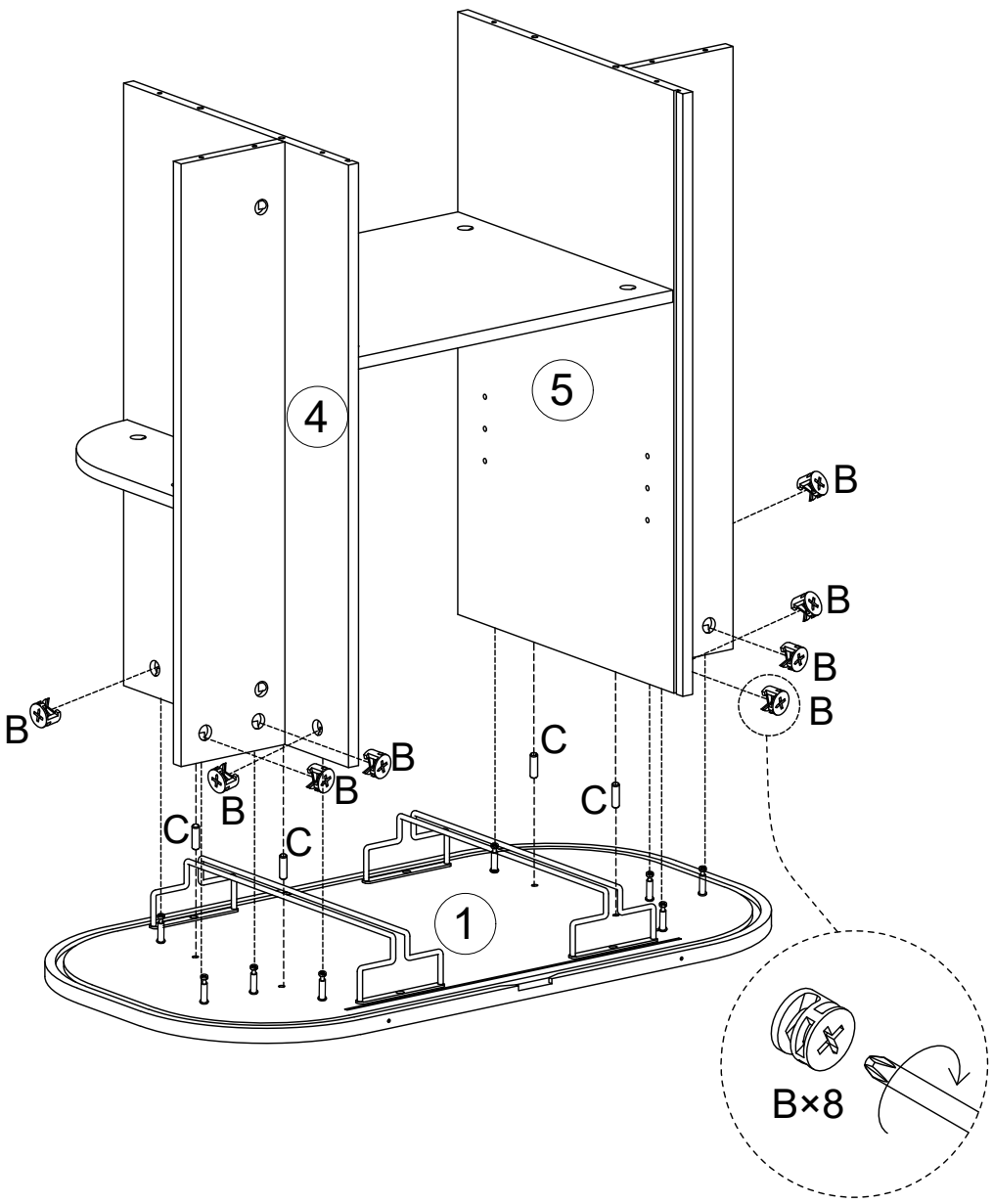

B	x8	C	x4
		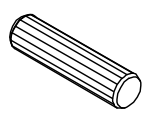	
Ø15x9mm		Ø6x30mm	

9

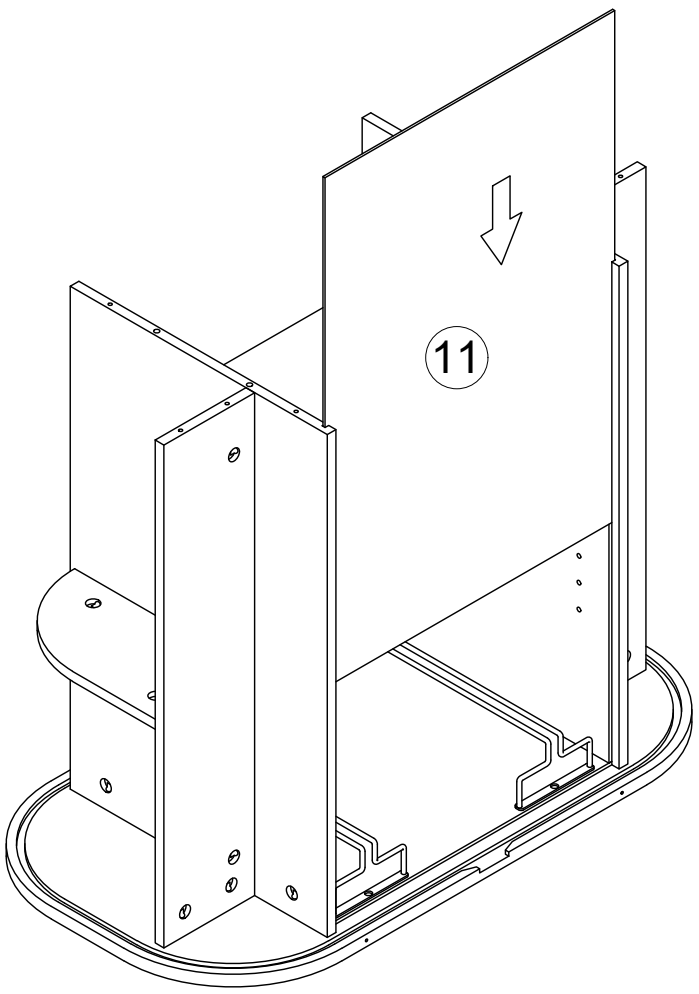

10

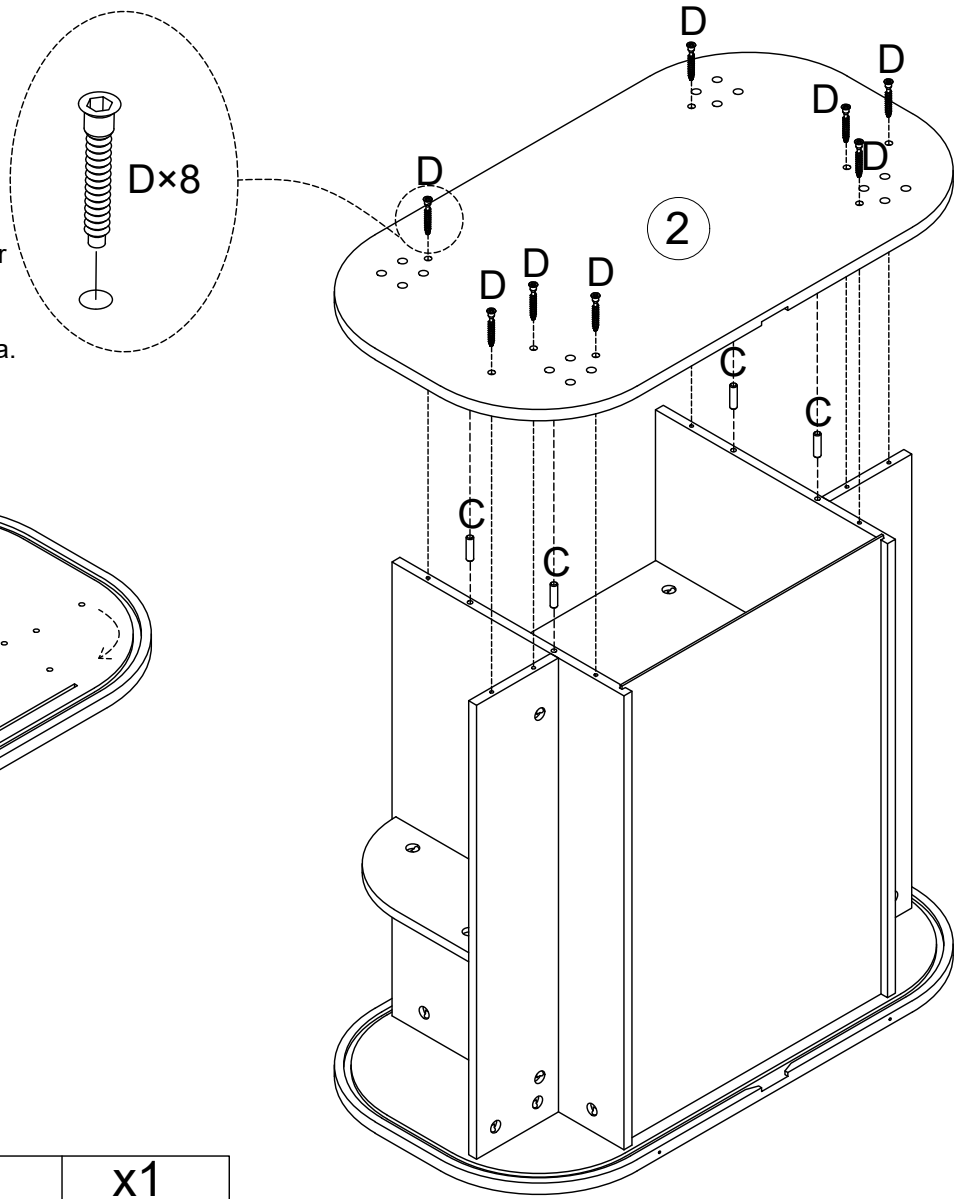

DE: Wenn der Boden uneben ist, passen Sie die Einstellfußpolster
UK: Lubricate the sliding groove with a wax block.
FR: Lubrifiez la rainure coulissante avec un bloc de cire.
IT: Lubrificare la scanalatura scorrevole con un blocchetto di cera.
ES: Lubrique la ranura deslizante con un bloque de cera.
NL: Smeer de schuifgroef in met een wasblok.
SE: Smörj glidspåret med ett vaxblock.
PL: Nasmaruj rowek ślizgowy blokiem wosku.

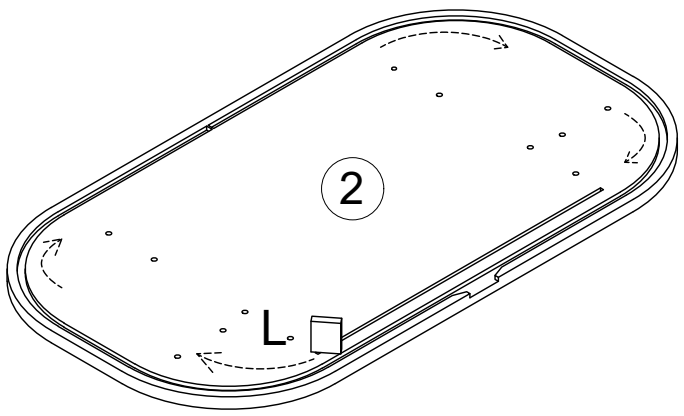

C	x4	D	x8	L	x1
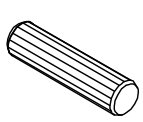		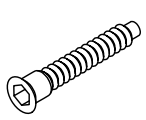		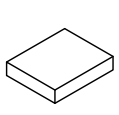	
Ø6x30mm		Ø5x38mm			

11

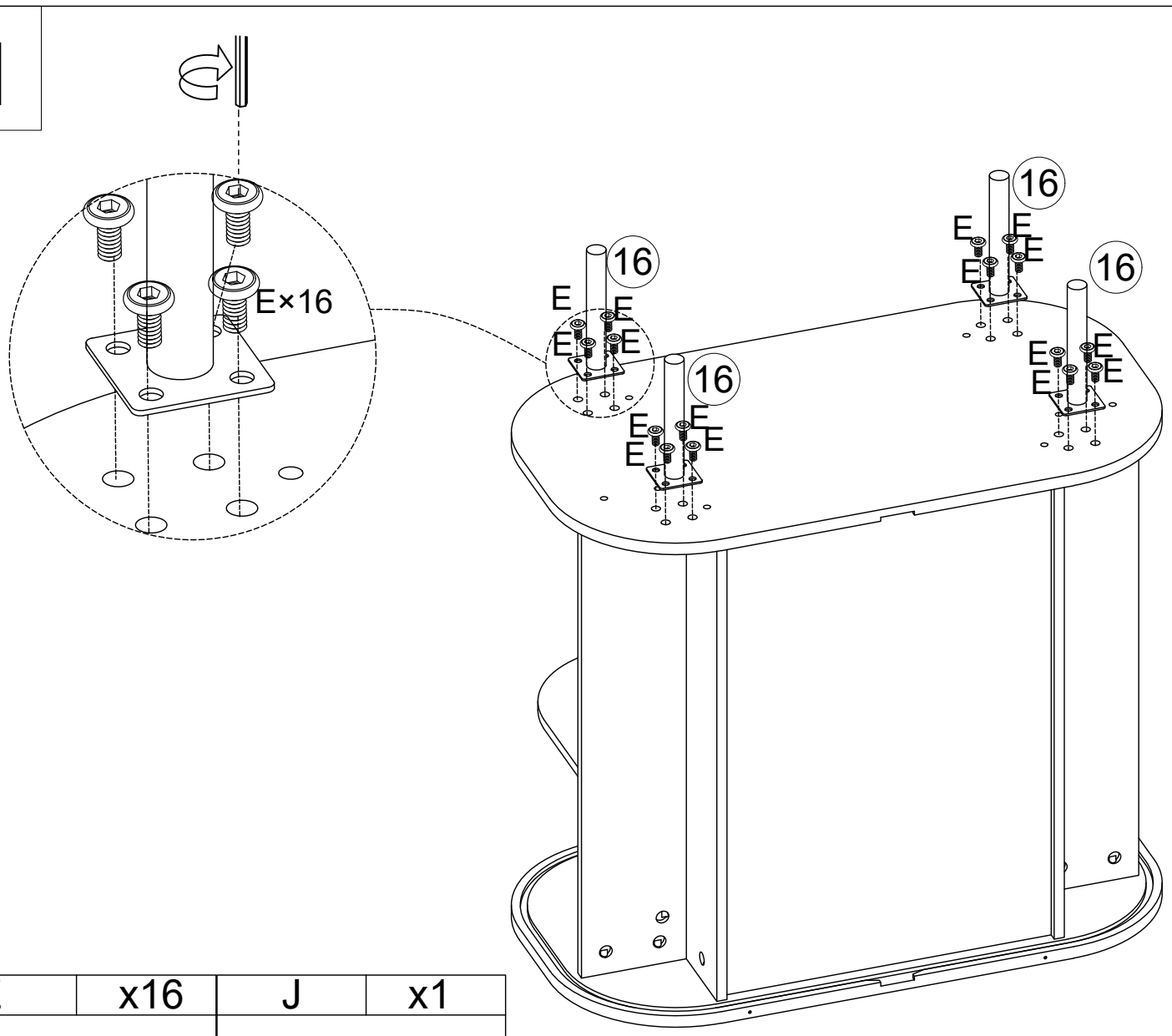

E	x16	J	x1
			
M6x12mm		M4	

12

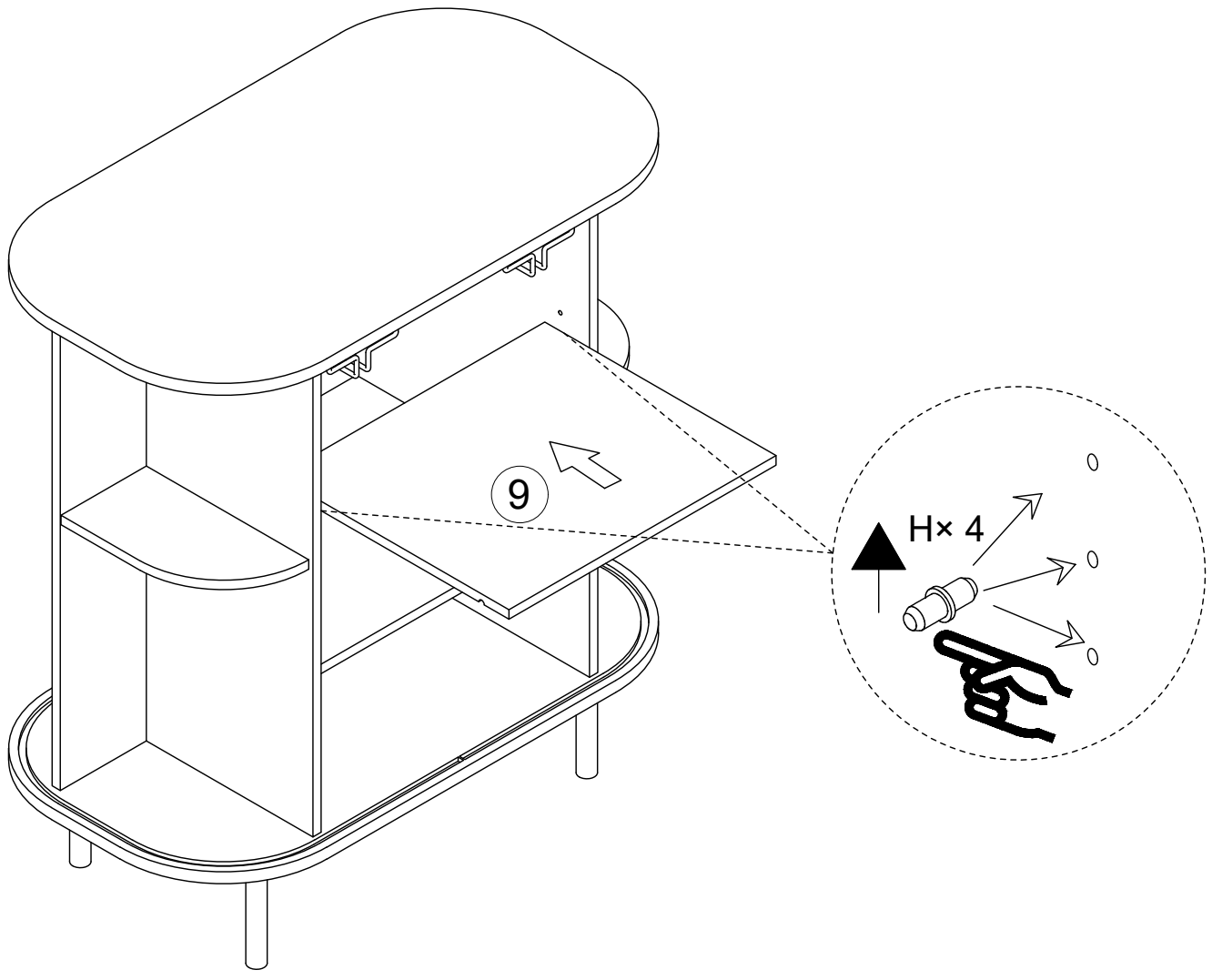

H	x4
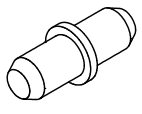	
Ø5x13.5mm	

13

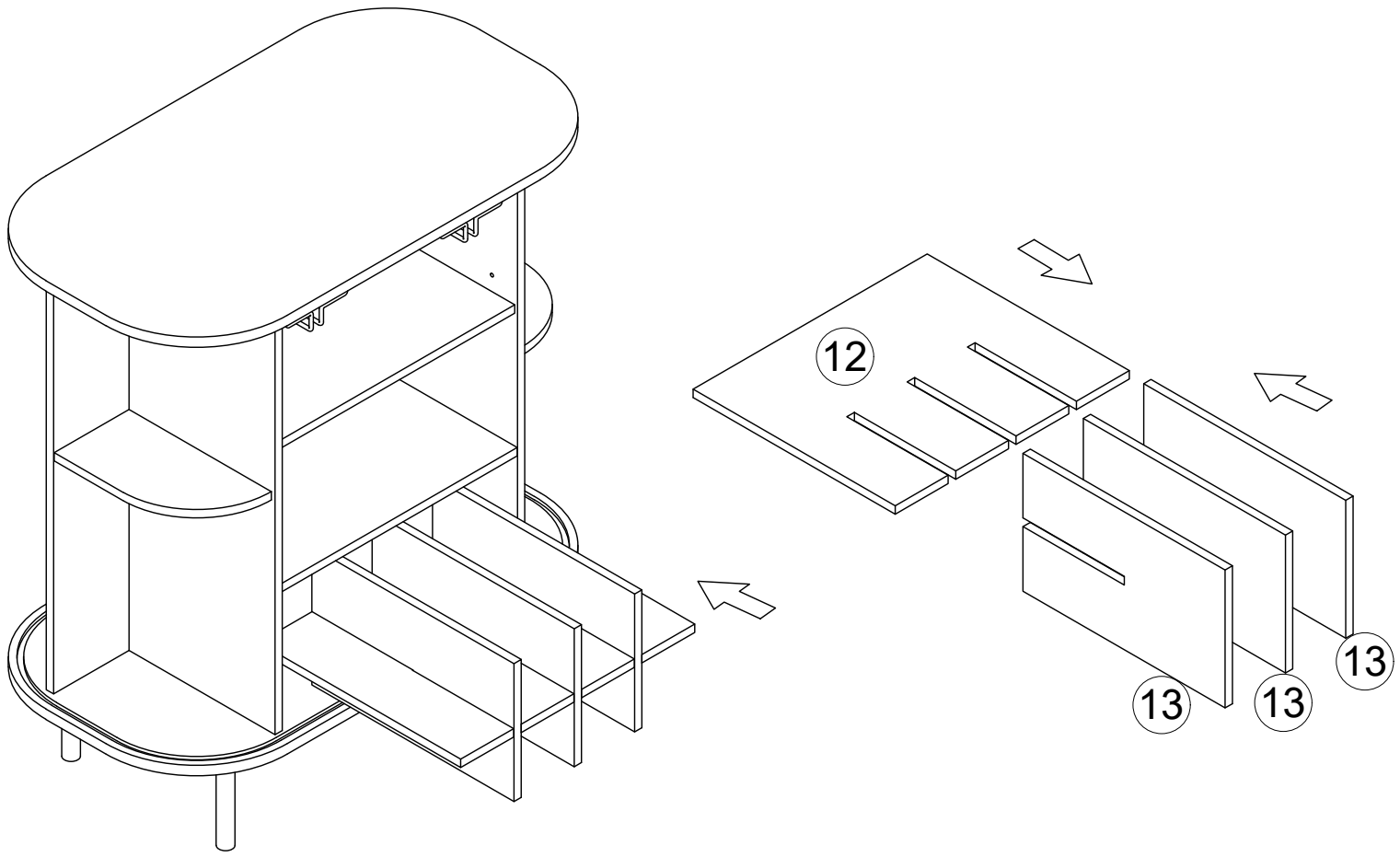

14

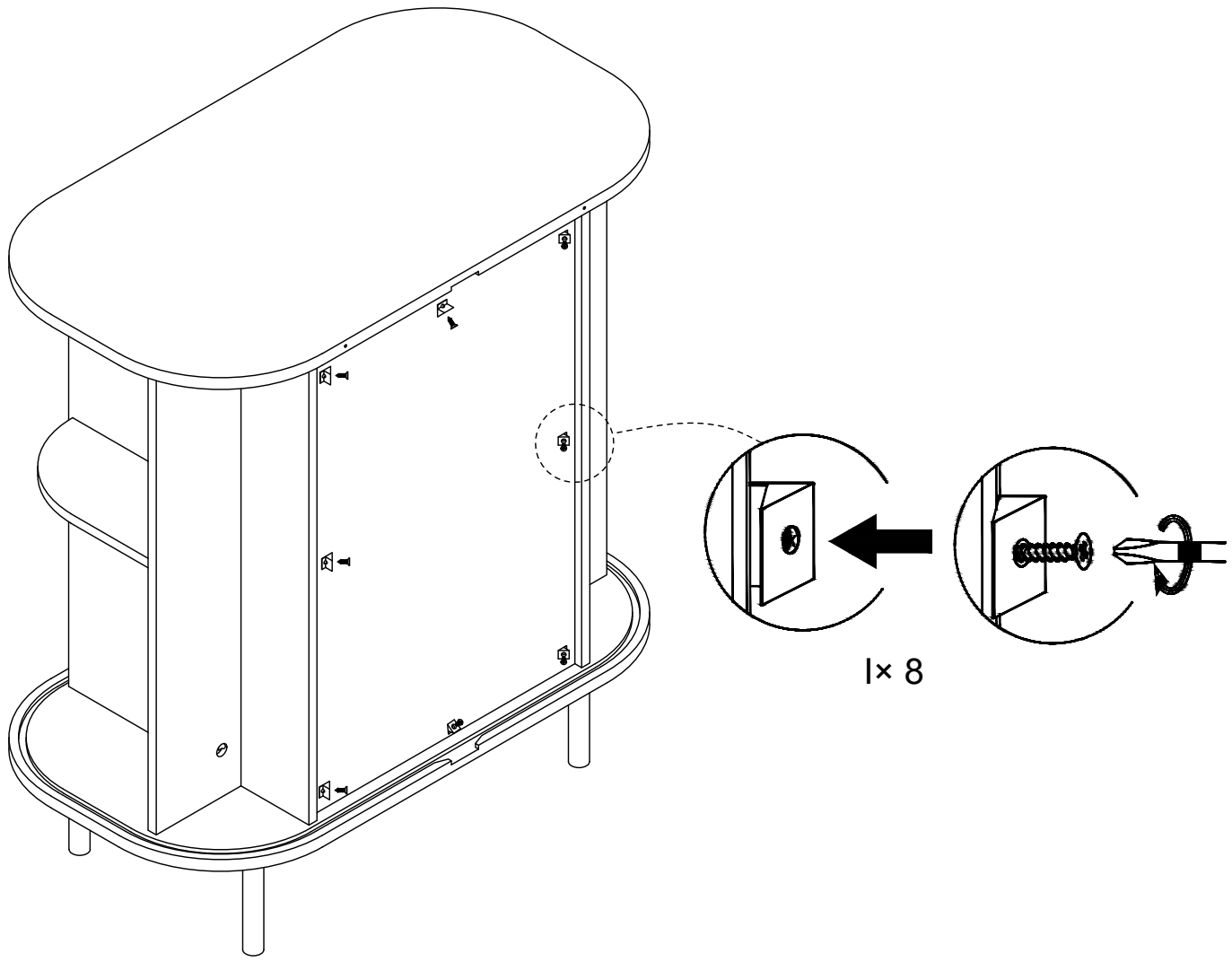

I	x8
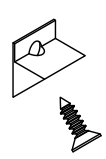	

15

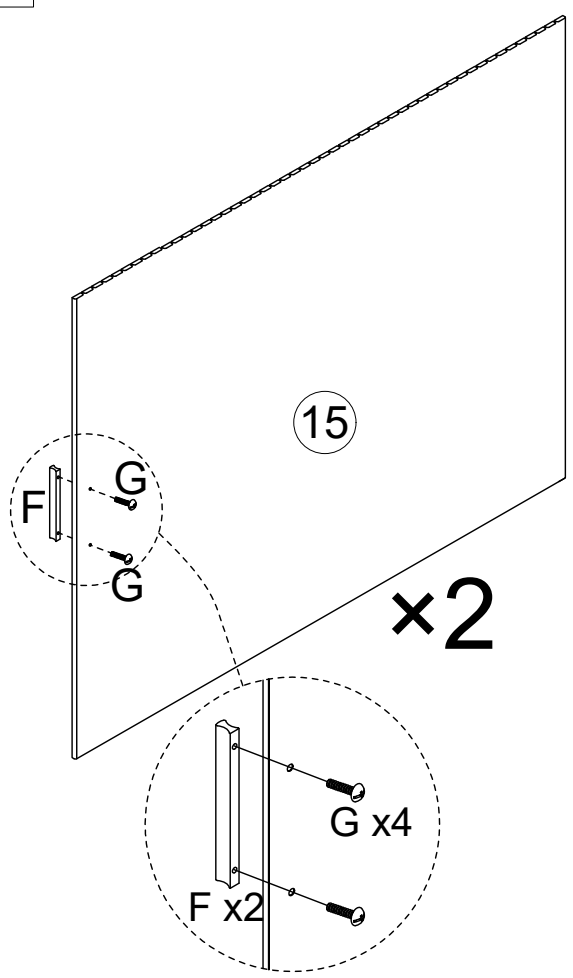

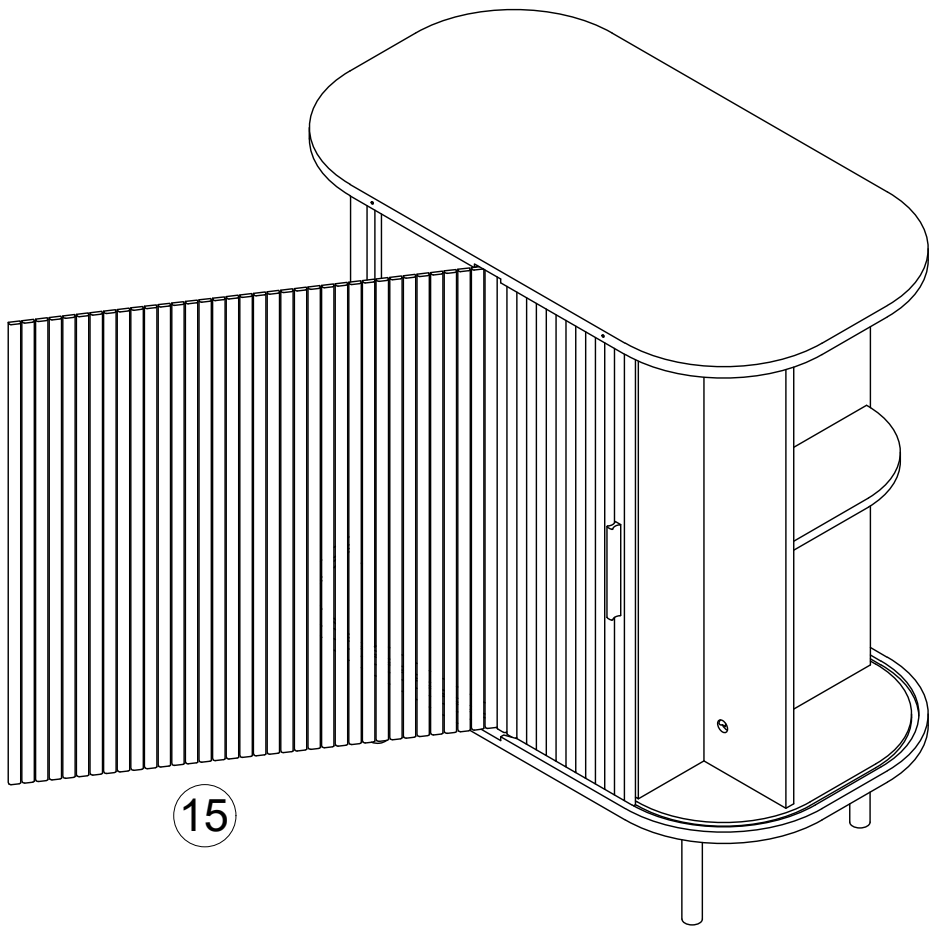

F	x2	G	x4
			
		M4x8mm	

16

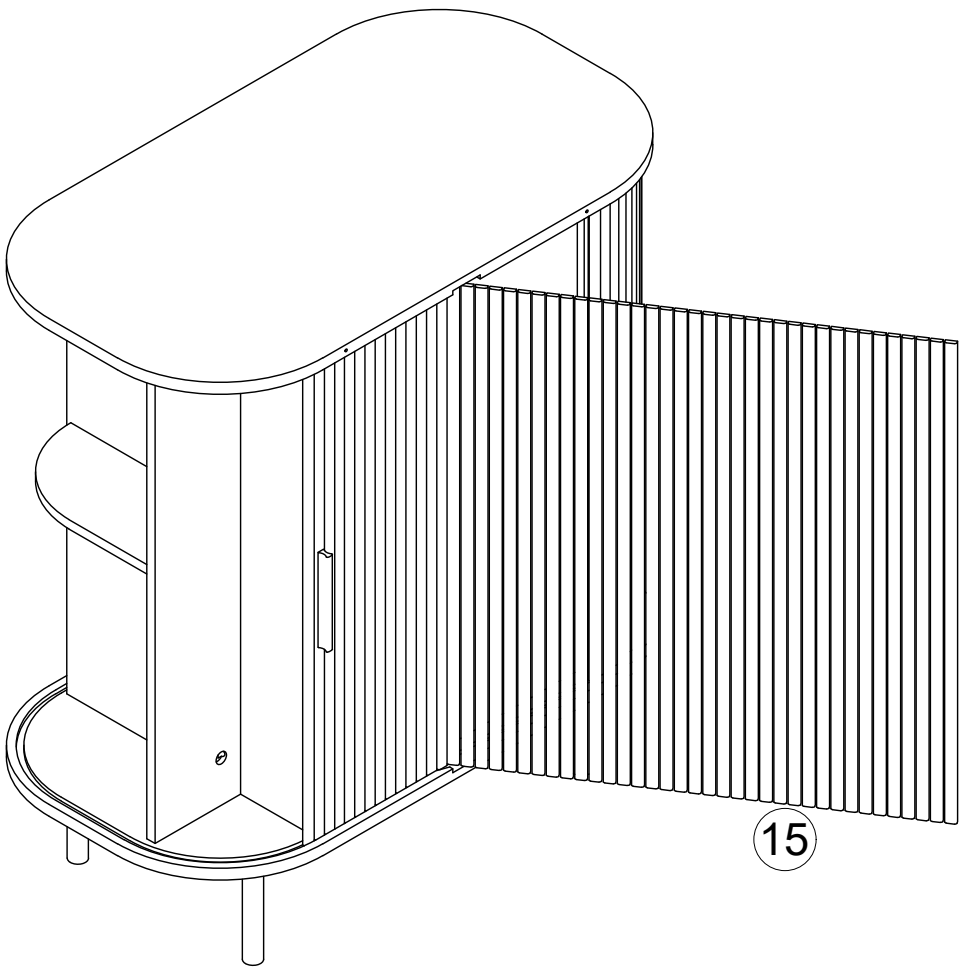

17

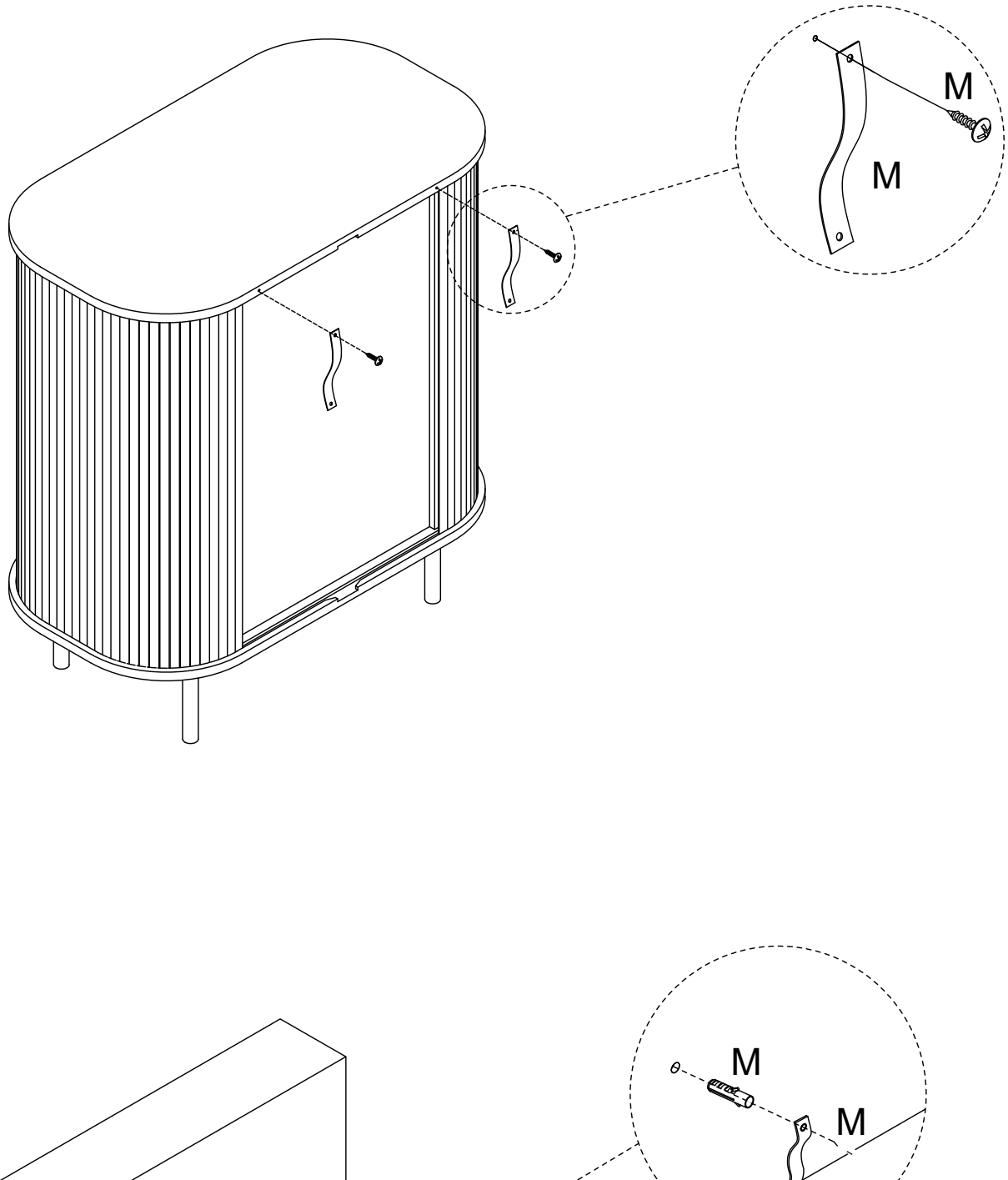

M	x2
