Bar Cabinet

Assembly Instructions-Please keep for future reference

SKU: N728P554720
N728P554721

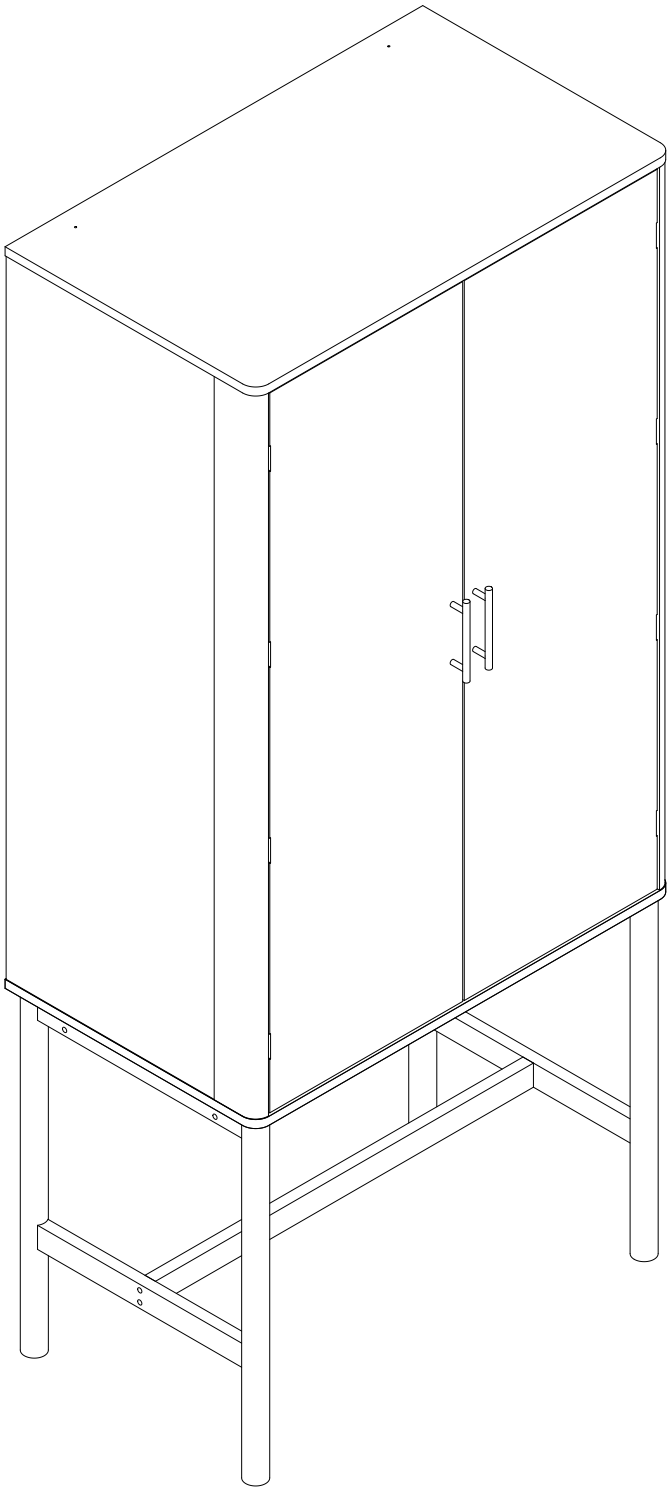



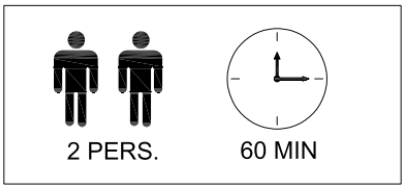

Important-Please read these instructions fully before starting assembly

Safety and Care Advice

Important – Please read these instructions fully before starting assembly

• Check you have all the components and tools listed on the following pages.

• Remove all fittings from the plastic bags and separate them into their groups.

• Keep children and animals away from the work area, small parts could choke if swallowed.

• Make sure you have enough space to layout the parts before starting.

• During assembly do not stand or put weight on the product, this could cause damage.

• Assemble the item as close to its final position (in the same room) as possible.

• Assemble on a soft level surface to avoid damaging the unit or your floor.

• Parts of the assembly will be easier with 2 people.



• To reduce the likelihood of damaging your product please ensure that your power drill is set on a low torque setting.

Care and maintenance

• Only clean using a damp cloth and mild detergent, do no use bleach or abrasive cleaners.

• From time to time check that there are no loose screws on this unit.

• This product should not be discarded with household waste. Take to your local authority waste disposal centre.

Handy Hints

• Assemble all parts and bolts loosely during assembly, only once the product is complete should you fully tighten the bolts

• Regularly check and ensure That all bolts and fittings are tightend properly.

WARNING
In order to help prevent overturning – please follow these instructions

To help prevent product toppling over please follow the below steps:-

Use the anti tip stap or wall fixing method provided (if applicable)
Do not allow children to climb or hang on the furniture
Do not open more than one drawer at a time
Do not place heavy items in the top drawers
Do not place heavy items on top of the furniture, unless the furniture has been designed for this purpose

Using Camlocks

Step 1

Connect the male camlock as diected in the assembly instructions using a scewdriver.

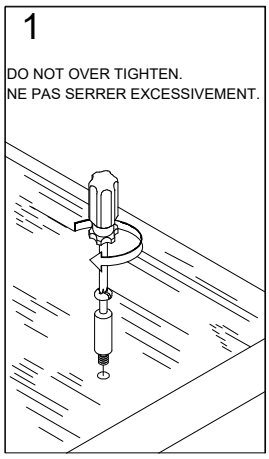

Step 2

Push the male camlock into the entry hole.

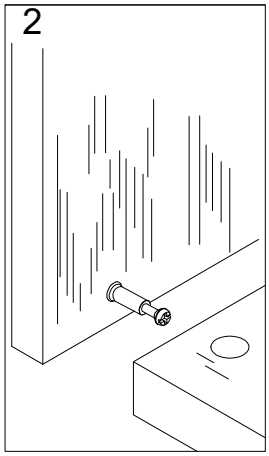

Step 3

Insert the female camlock as shown in the instruction.

Note：ensure that the arrow on the top of the camlock points towards the entry hole for the male camlock.

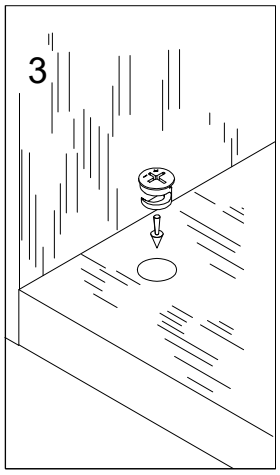

Step 4

Turn the female camlock clockwise with a screwdriver.

You should feel a click when the camlock is locked in place.

The joint is now secure.

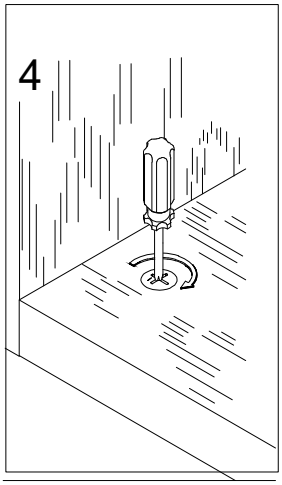

Components - Fittings

Please check you have all the panels listed below

Note:The quantities below are the correct amount to complete the assembly. In some cases, more fittings may be supplied than required.

A 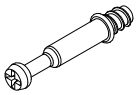 Cam Bolt x47	B  Cam Lock x47	C  8x30mmDowel x44	D 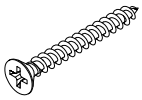 5x40mm Screw x17
E  3.0x14mm Screw x60	F  Double-roller cabinet catch x2	G  Coil-spring hinge x2	H  Shelf support pin X4
I  M6x22mm Screw x4	J  M6x50mm Screw x22	K  Hinge x8	L 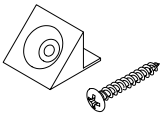 x12
M  Anti-fall accessories x2	N 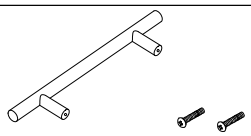 Long bar handle x2 screw 4x18mm	O  Adjustable Foot x4	P  x 47
Q  8x20mmDowel x4	R  Wrench M4X55MM x1	S 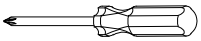 Screwdriver x1	
DR 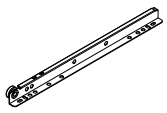 300mmrunner x1	DL 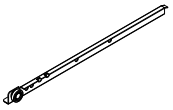 300mm runner x1	CR 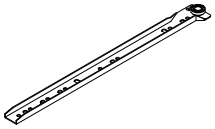 300mm runner x1	CL 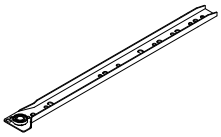 300mm runner x1

Assembly Instructions

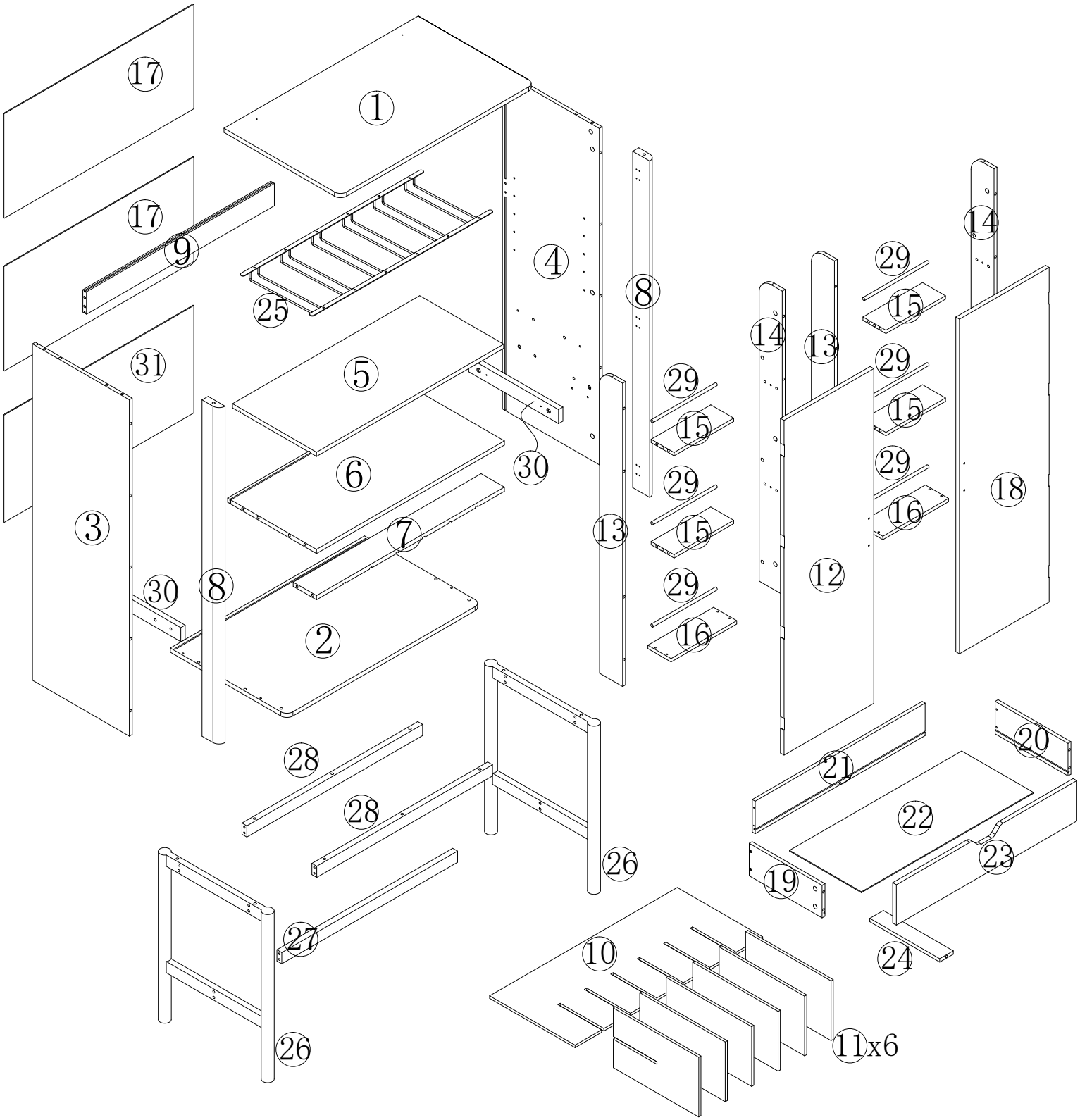

Assembly Instructions

BOX 1 SKU:N728P554720

3 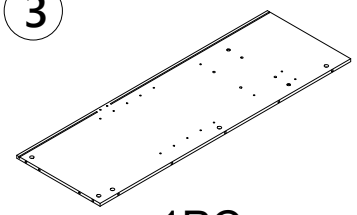 1PC	4 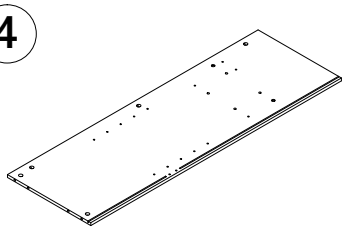 1PC	8 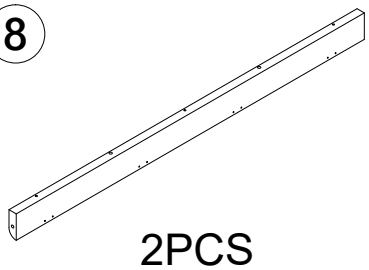 2PCS
12 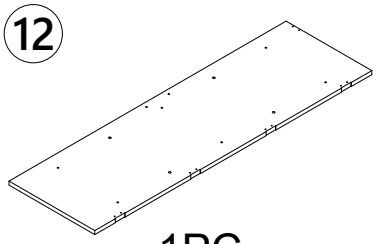 1PC	13 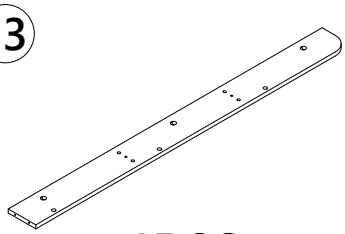 2PCS	14 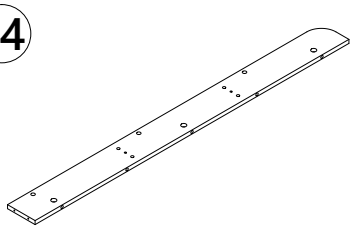 2PCS
17 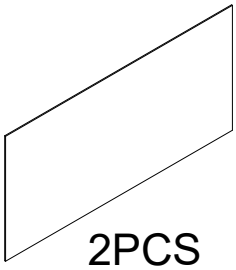 2PCS	18 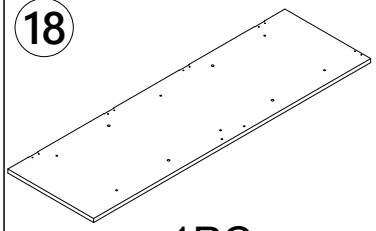 1PC	22 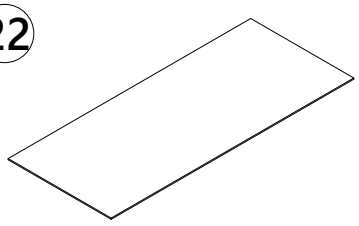 1PC
25 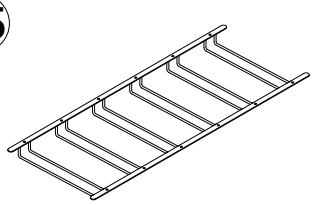 1PC	27 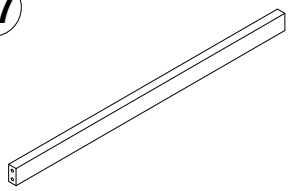 1PC	28 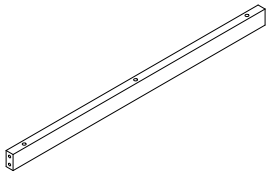 2PCS
30 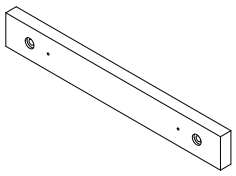 2PCS	31 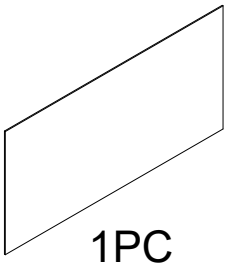 1PC	

Assembly Instructions

BOX 2 SKU:N728P554721

1 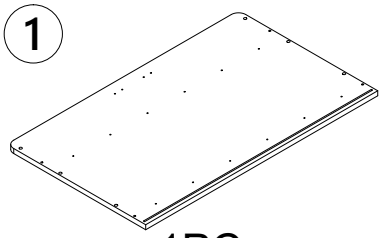 1PC	2 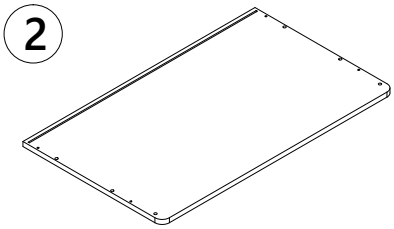 1PC	5 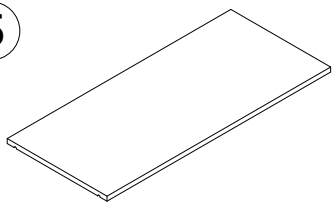 1PC
6 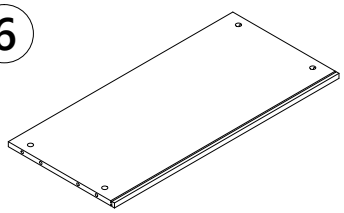 1PC	7 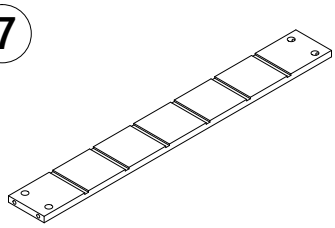 1PC	9 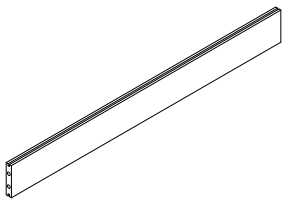 1PC
10 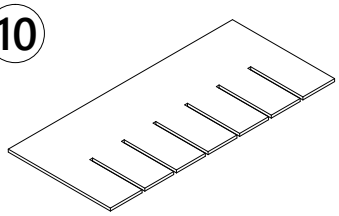 1PC	11 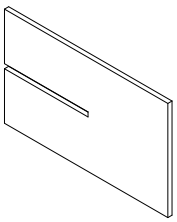 6PCS	15 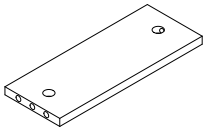 4PCS
16 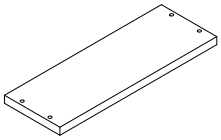 2PCS	19 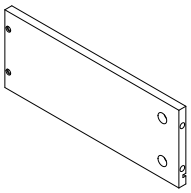 1PC	20 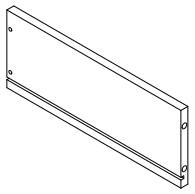 1PC
21 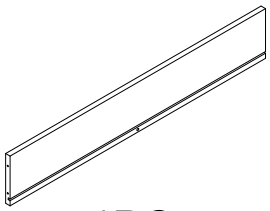 1PC	23 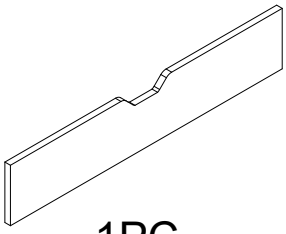 1PC	24 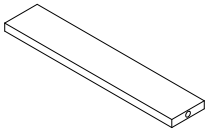 1PC
26 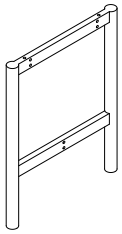 2PCS	29 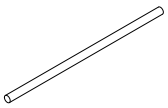 6PCS	

Assembly Instructions

A 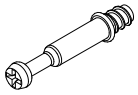	Cam Bolt x16
E 	3.0x14mm Screw x16
F 	Double-roller cabinet catch x2
I 	M6x22mm Screw x4
Q 	8x20mmDowel x4

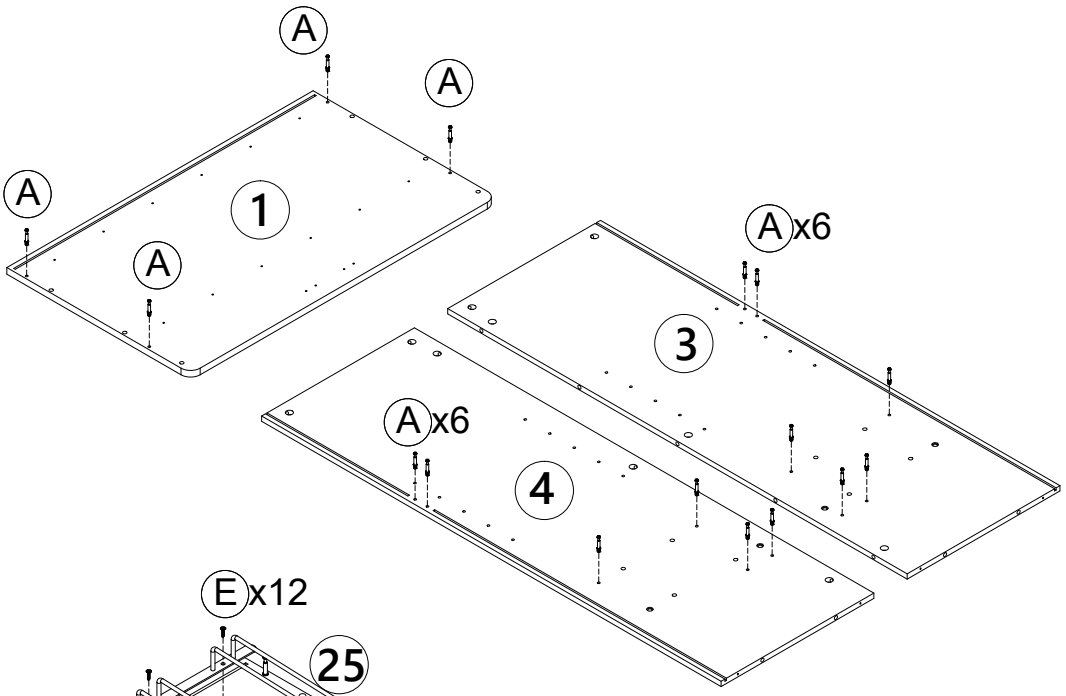

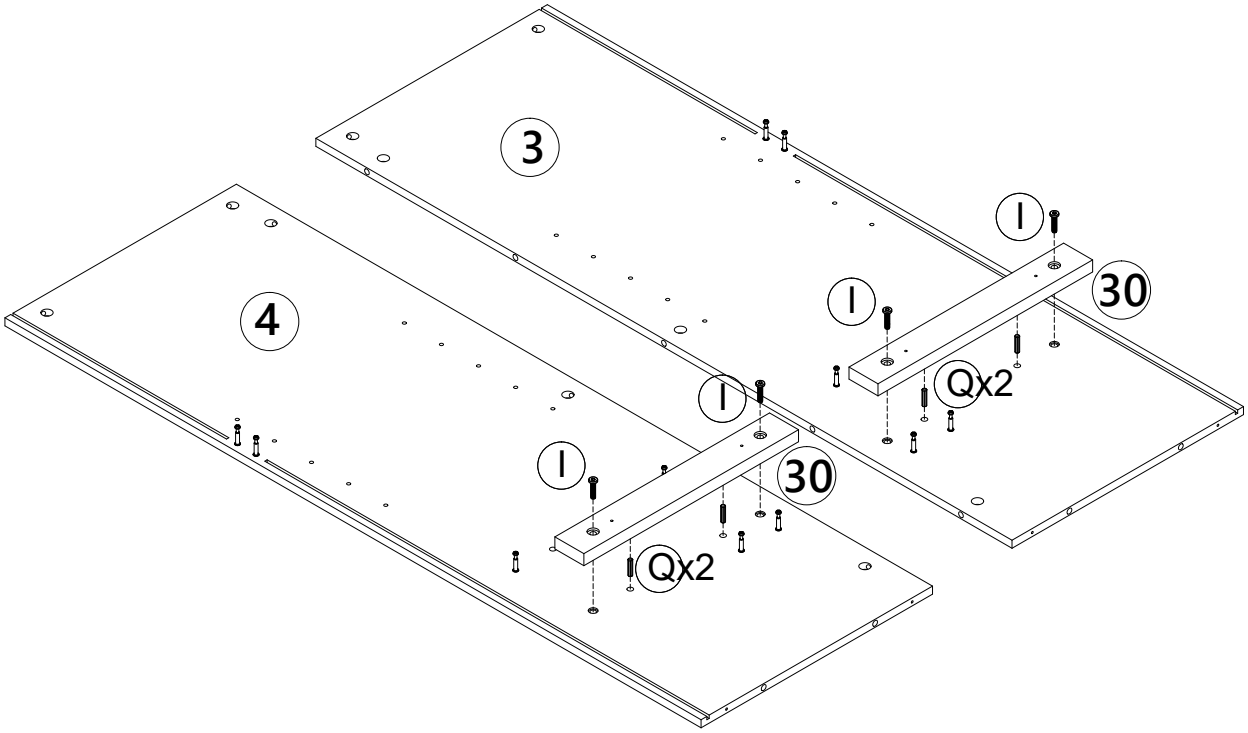

Step 1

Assembly Instructions

CR

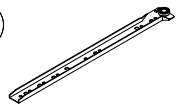

300mm runner x1

CL

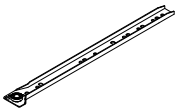

300mm runner x1

E



3.5x14mm Screw x4

A

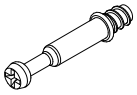

Cam Bolt x6

C



8x30mmDowel x4

B



Cam Lock x6

P



x 6

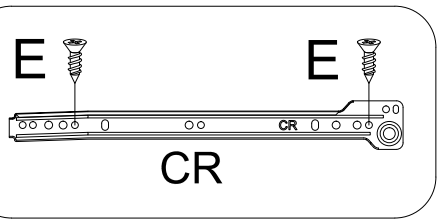

CR

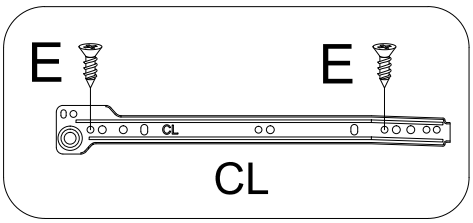

CL

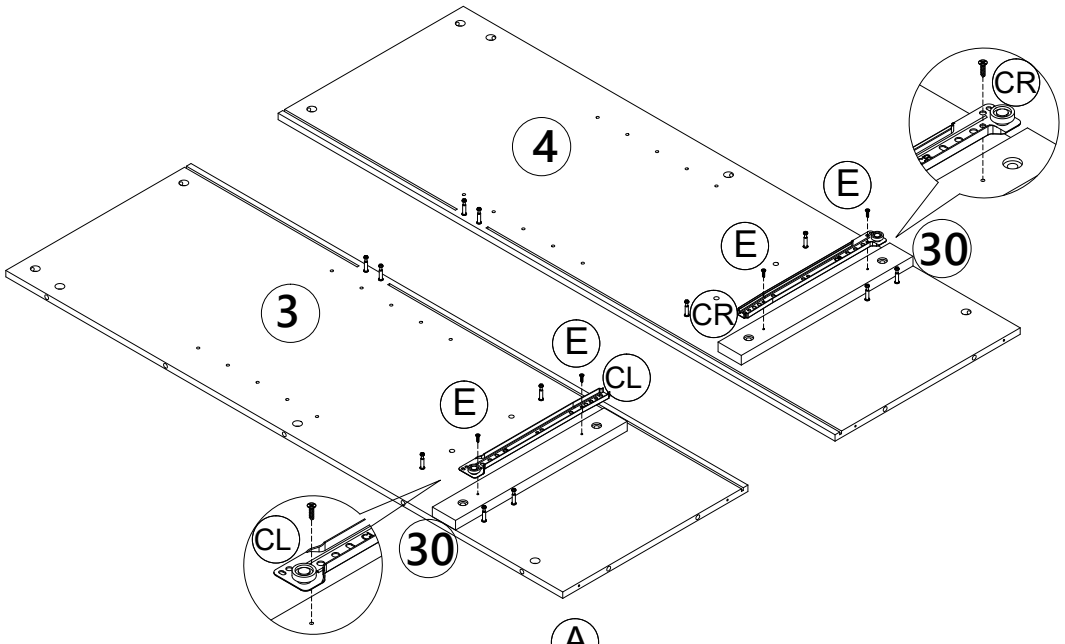

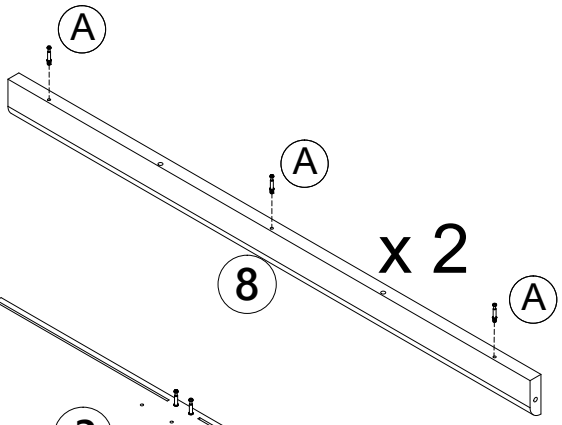

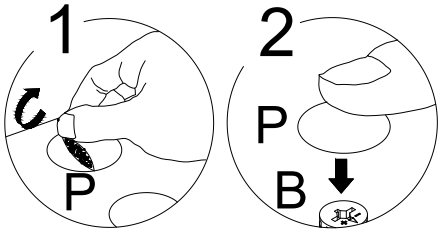

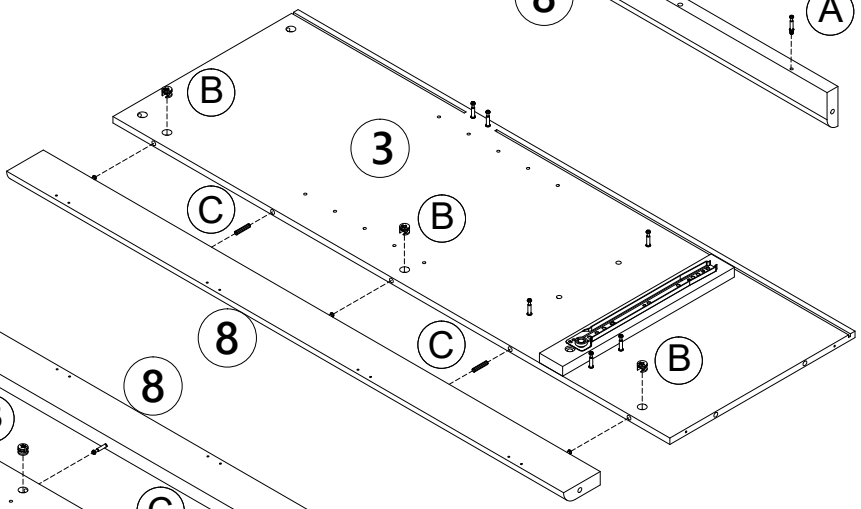

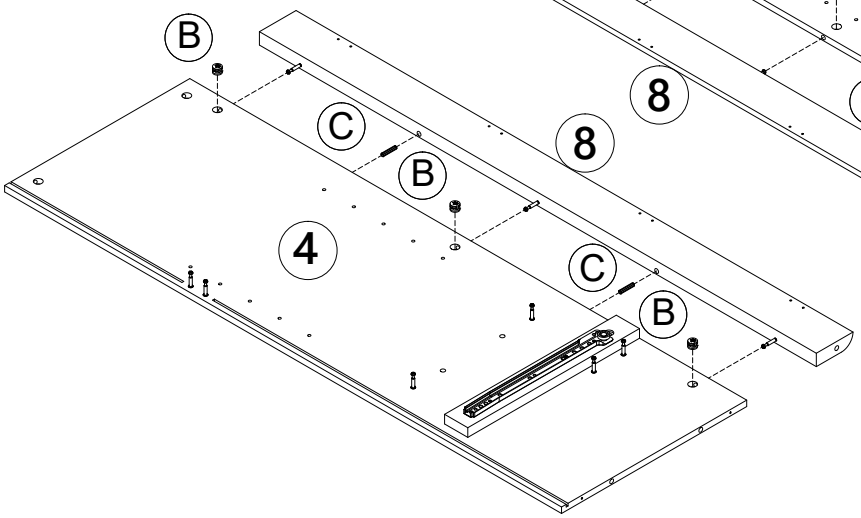

Step 2

Assembly Instructions

B  Cam Lock x12	
C  8x30mmDowel x4	
P  x 12	

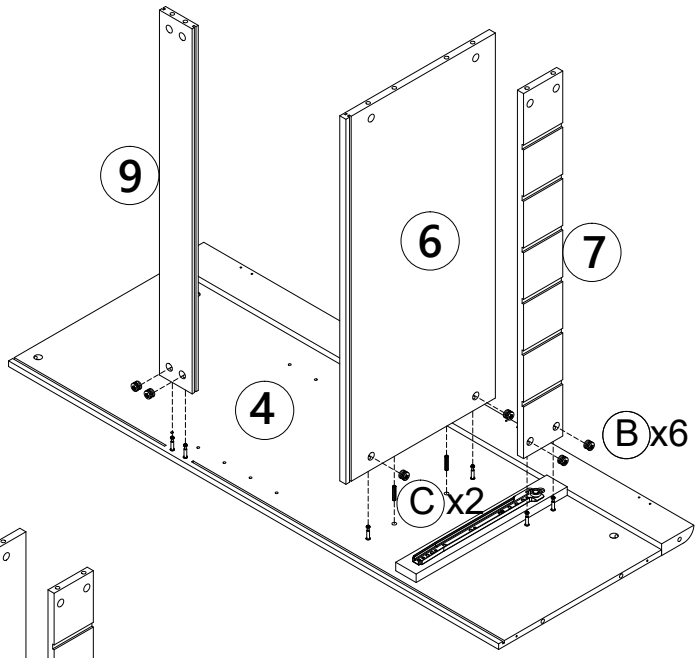

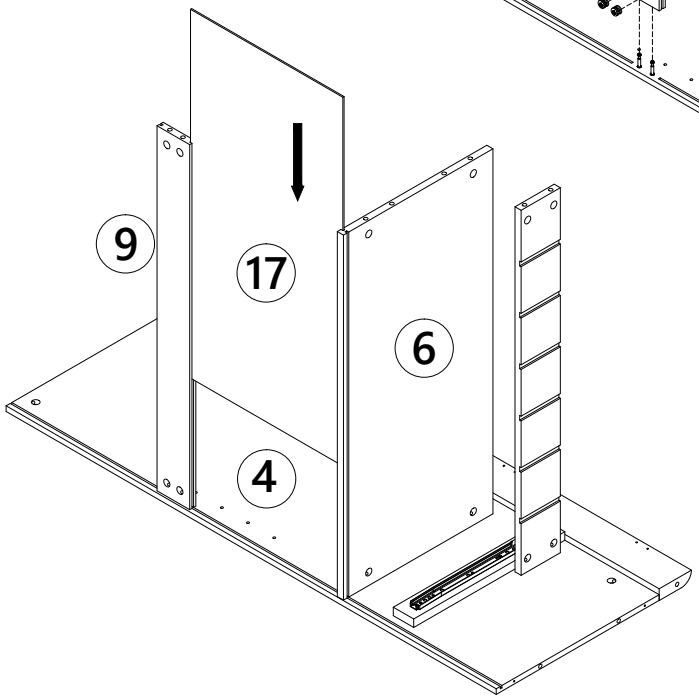

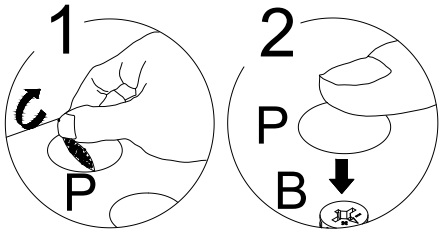

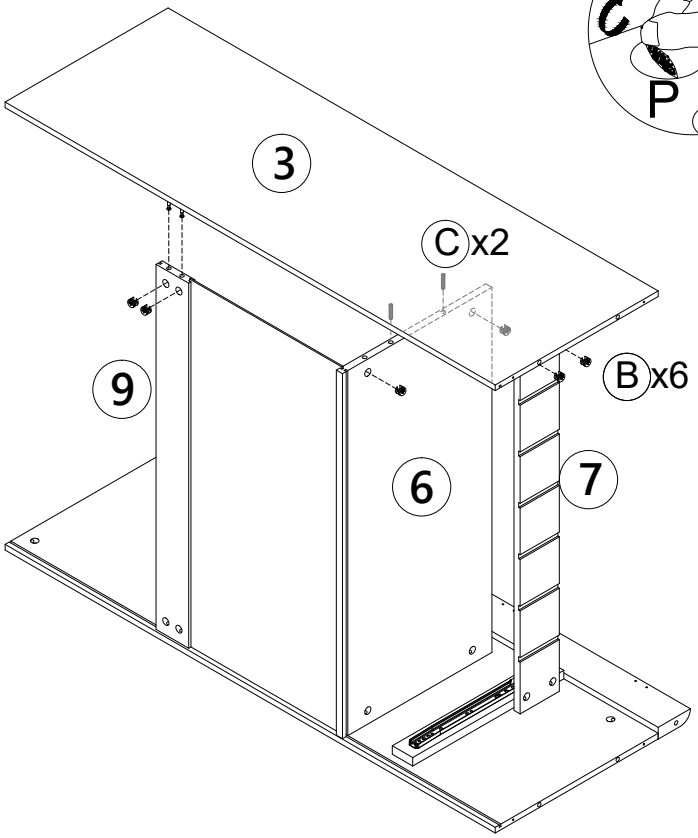

Step 3

Assembly Instructions

B  Cam Lock x4	
C  8x30mmDowel x6	
P  x 4	

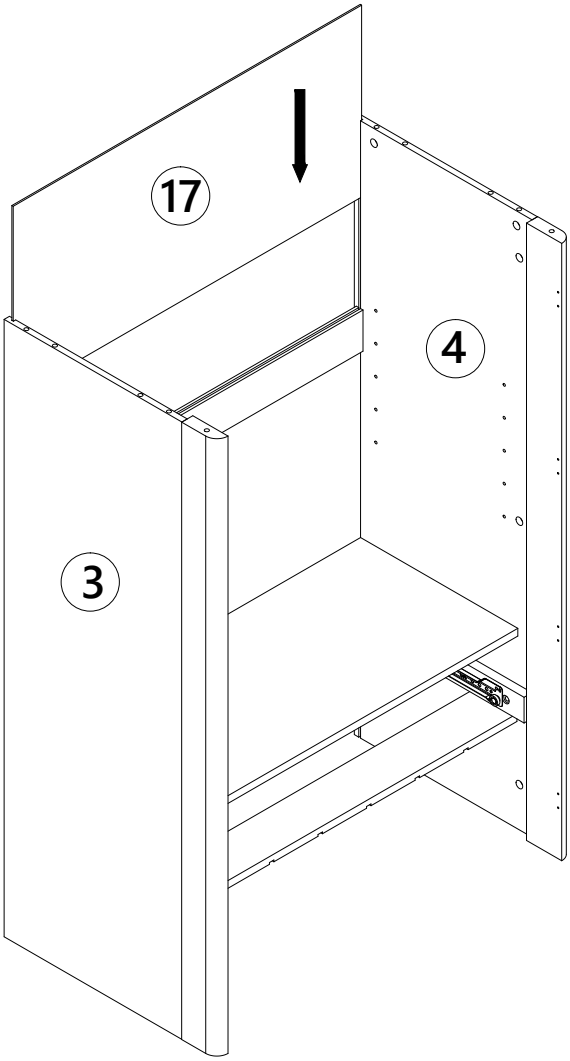

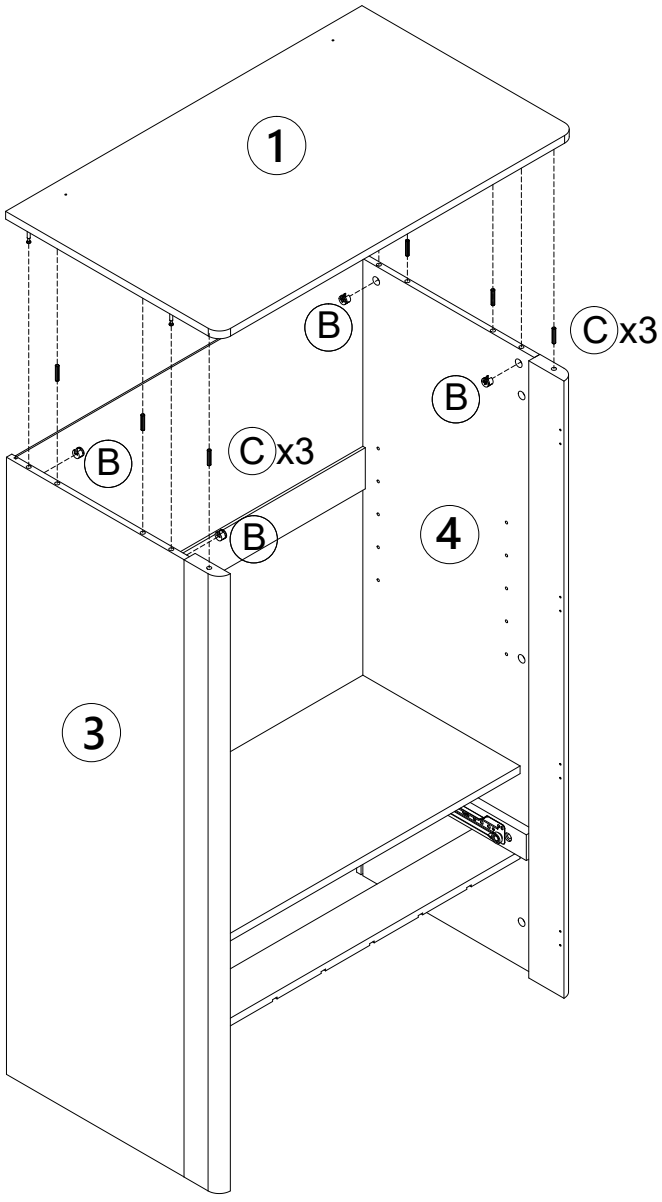

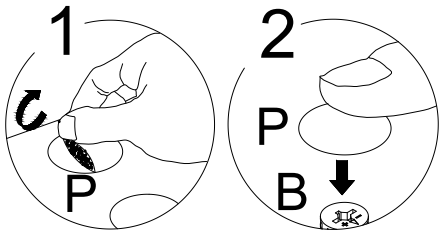

Step 4

Assembly Instructions

C



8x30mmDowel x6

D

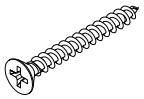

5x40mm Screw x4

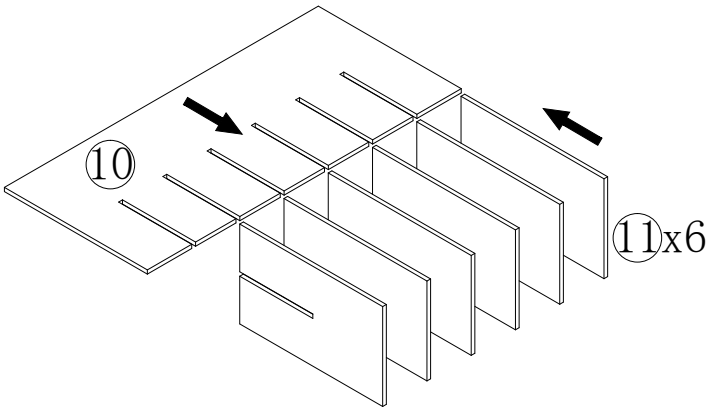

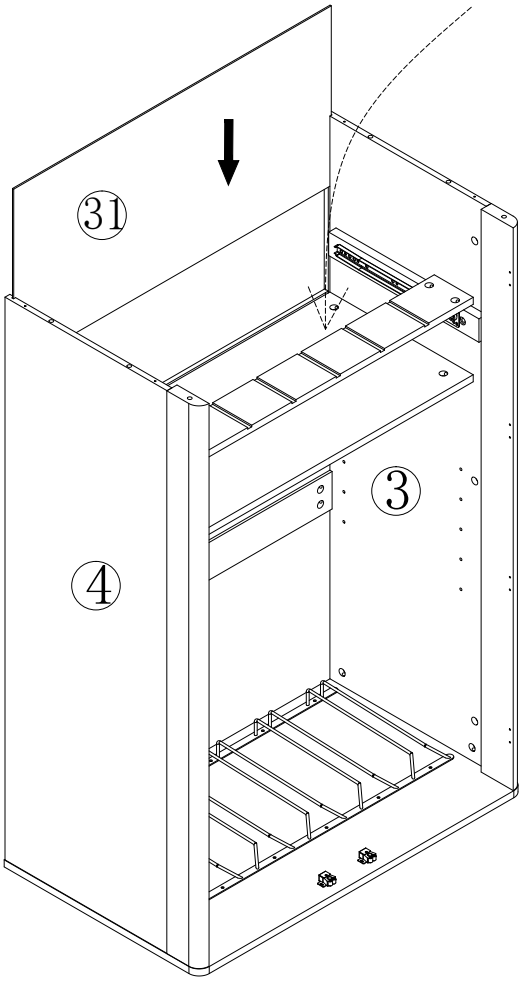

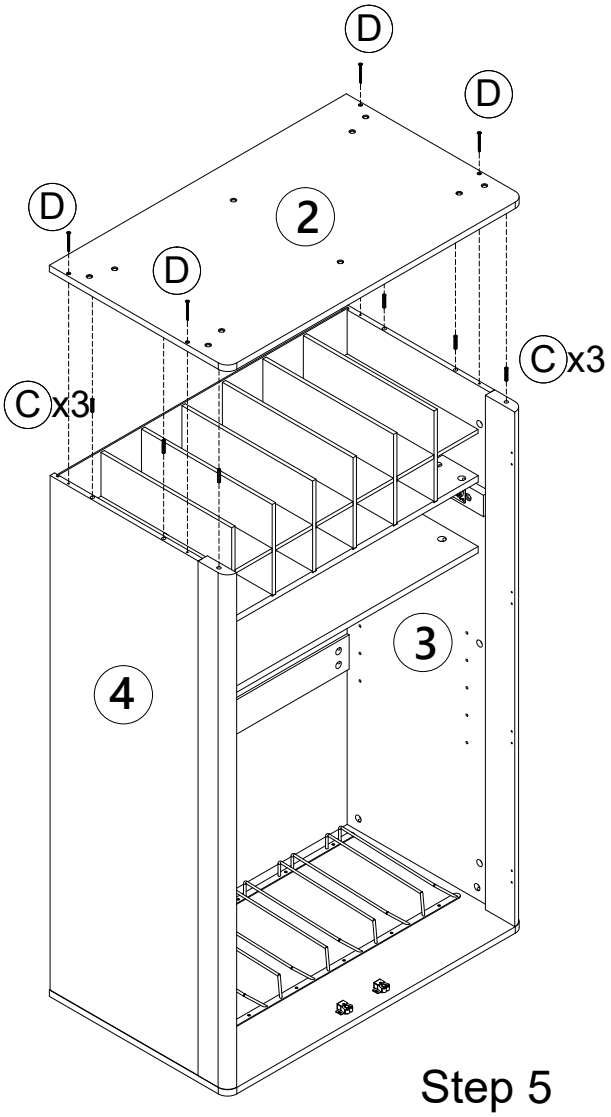

Step 5

Assembly Instructions

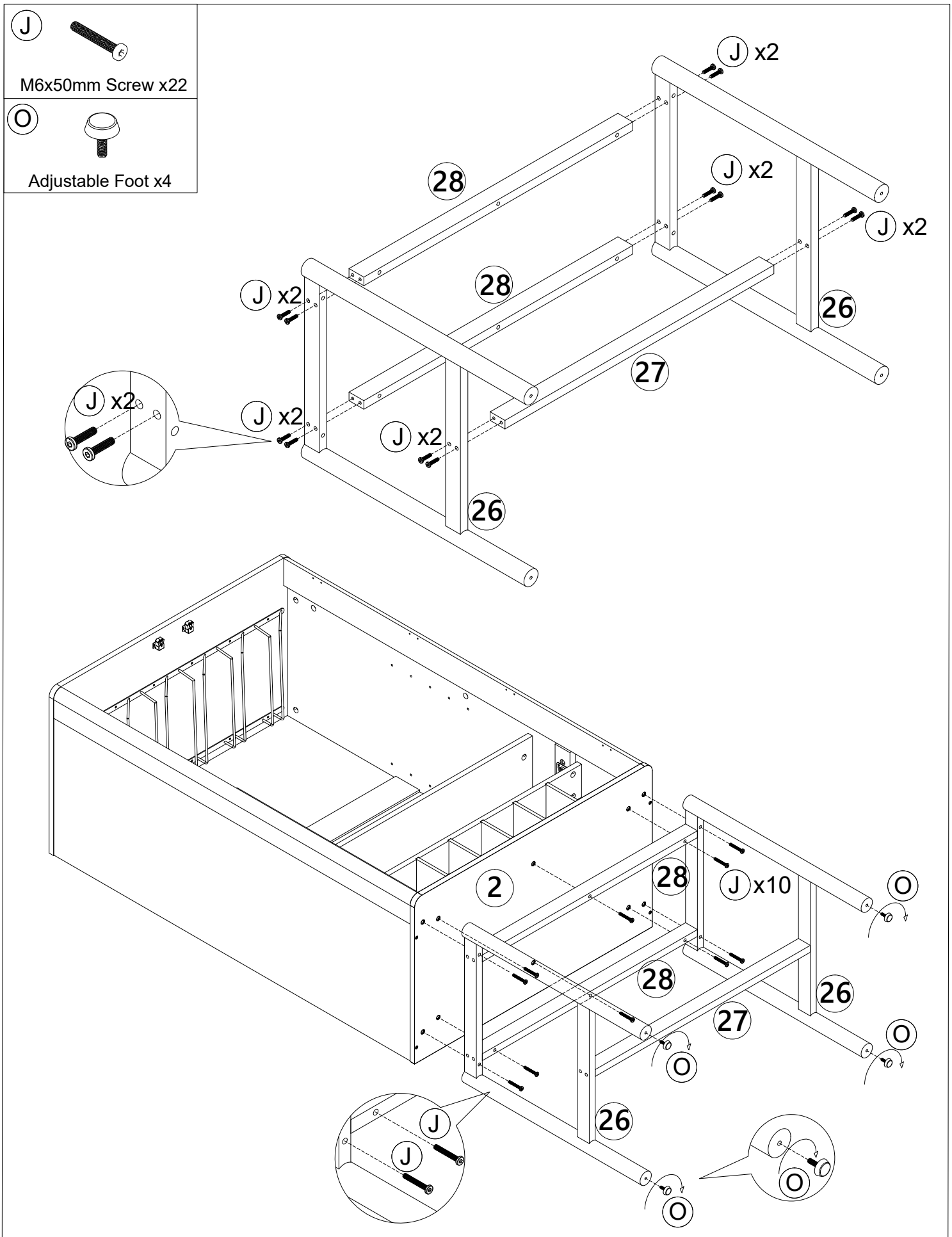

Step 6

Assembly Instructions

H



Shelf support pin x4

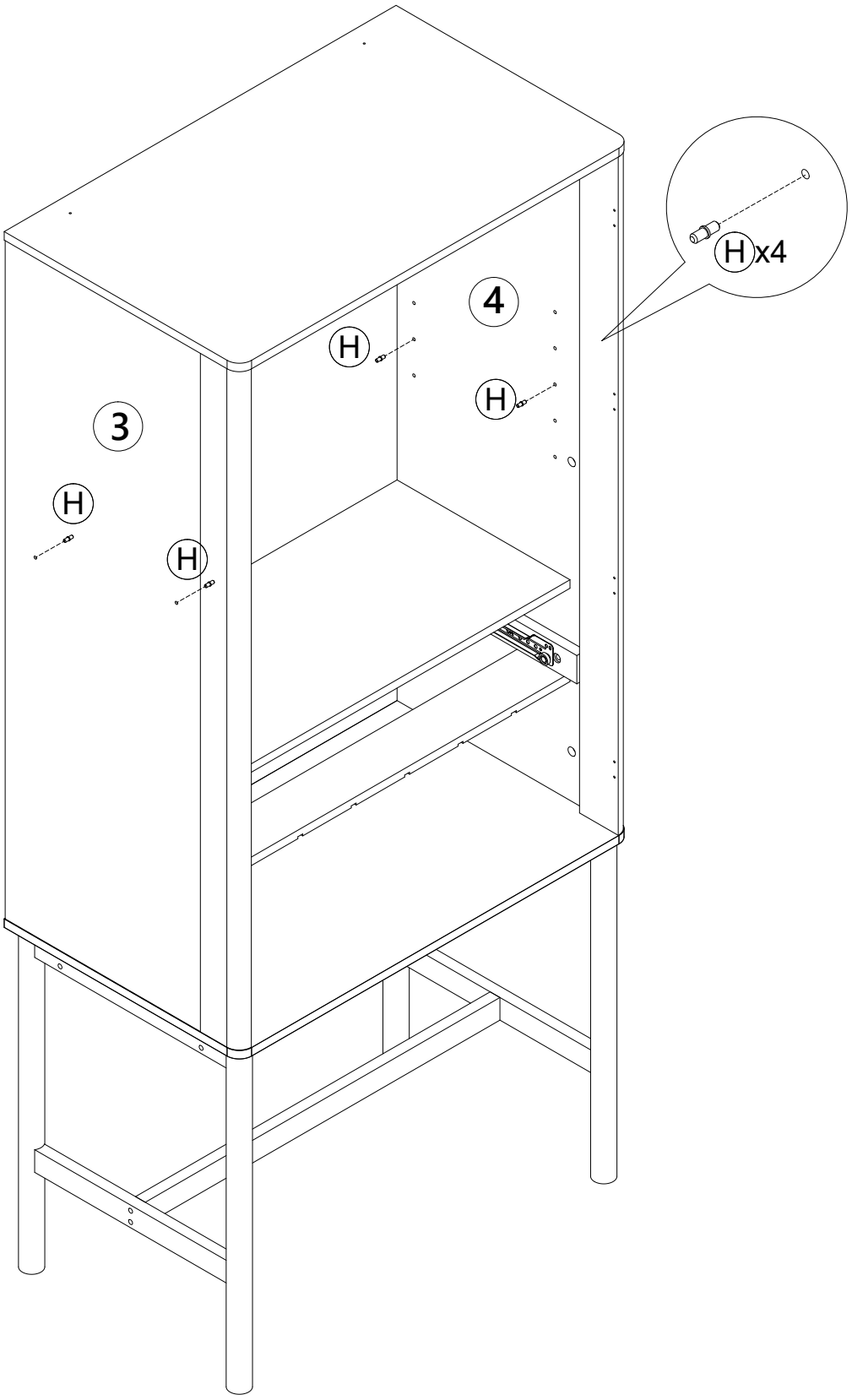

Step 7

Assembly Instructions

A 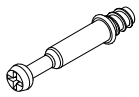	Cam Bolt x5
B 	Cam Lock x5
D 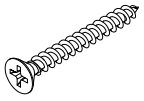	5x40mm Screw x5
P 	x 5

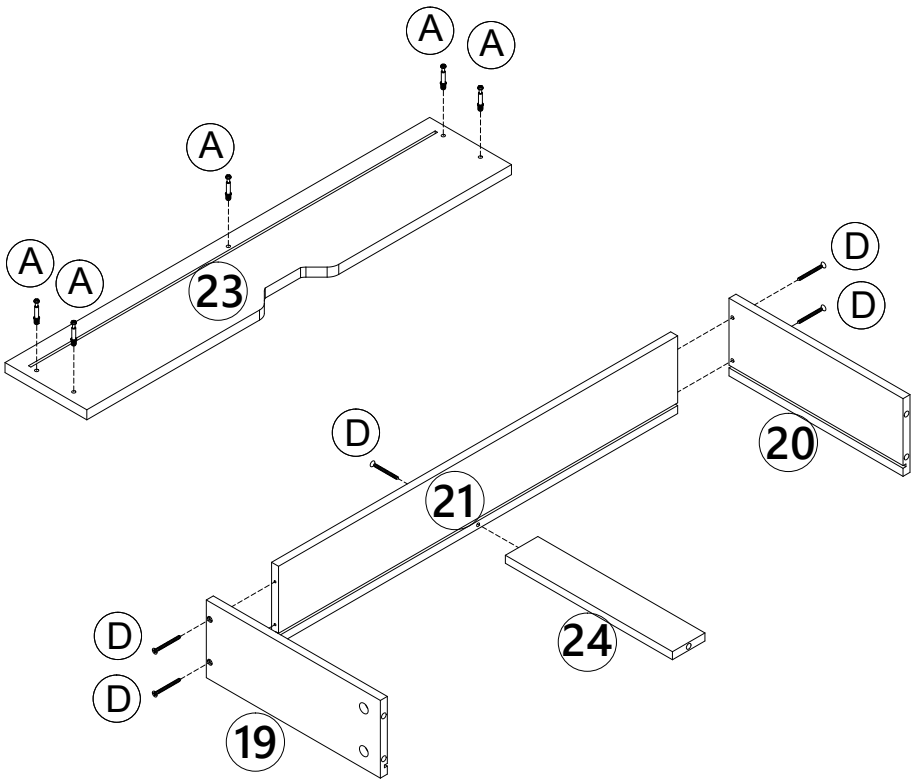

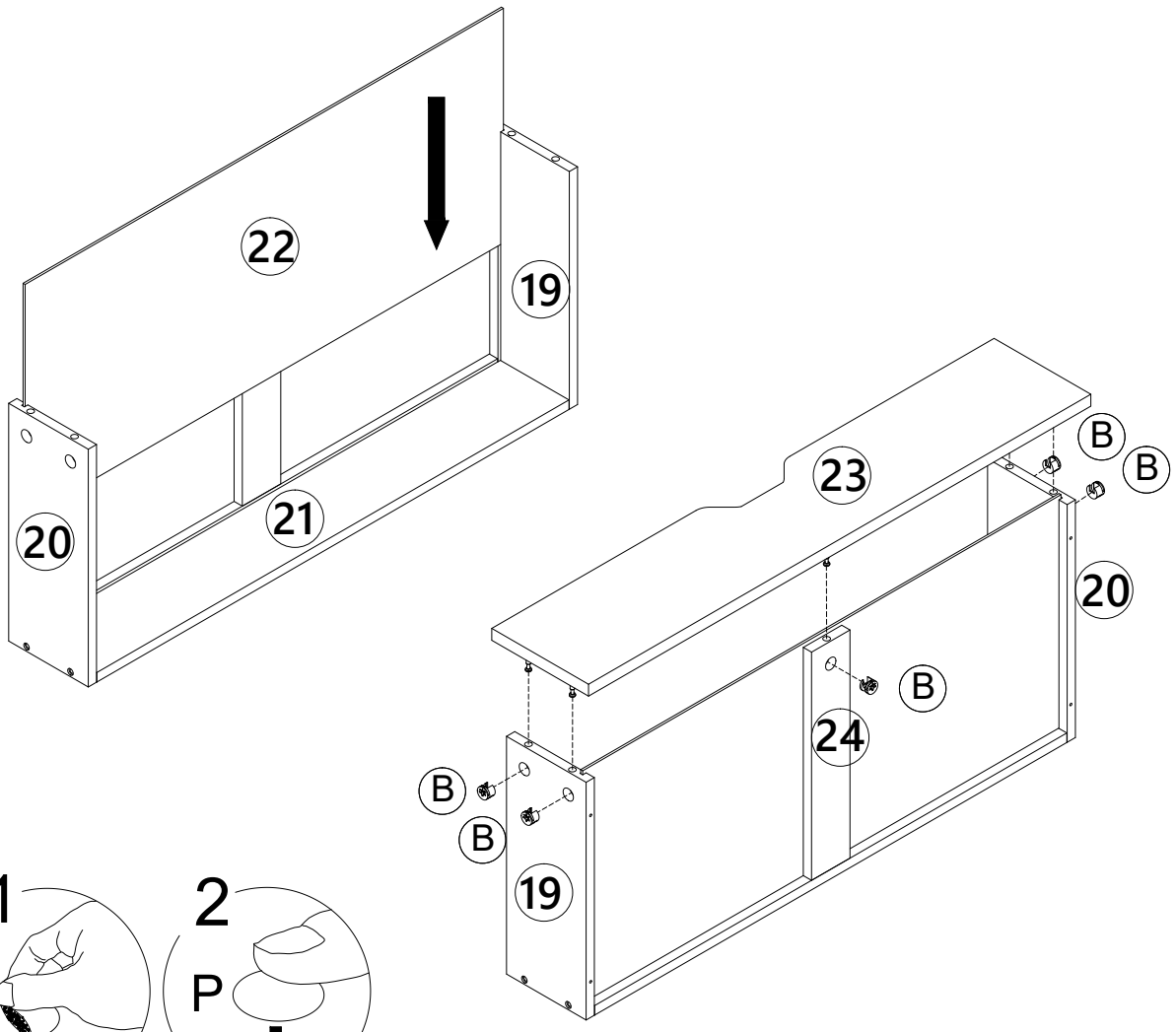

Step 8

Assembly Instructions

E



3.0x14mm Screw x4

DR

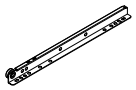

300mmrunner x1

DL



300mm runner x1

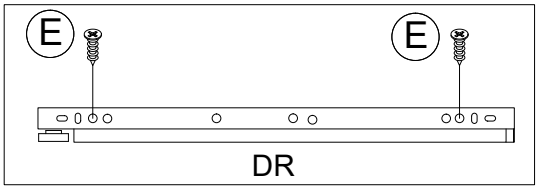

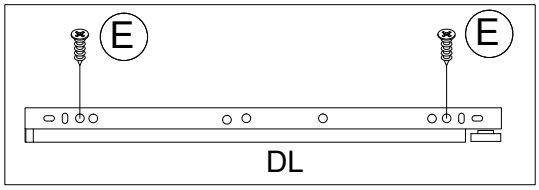

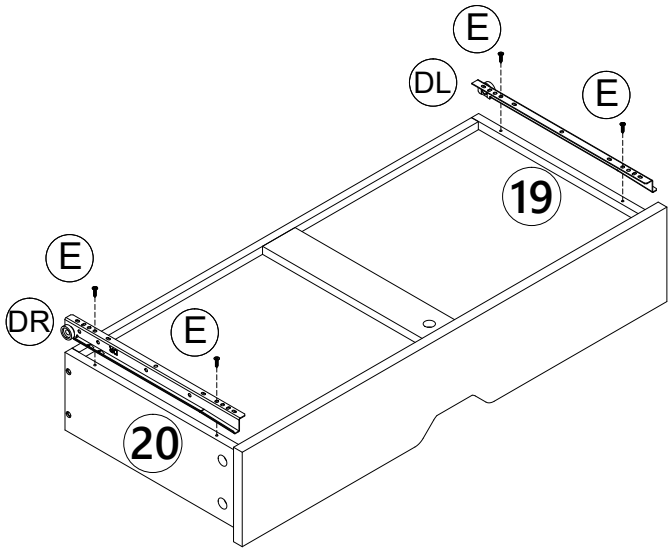

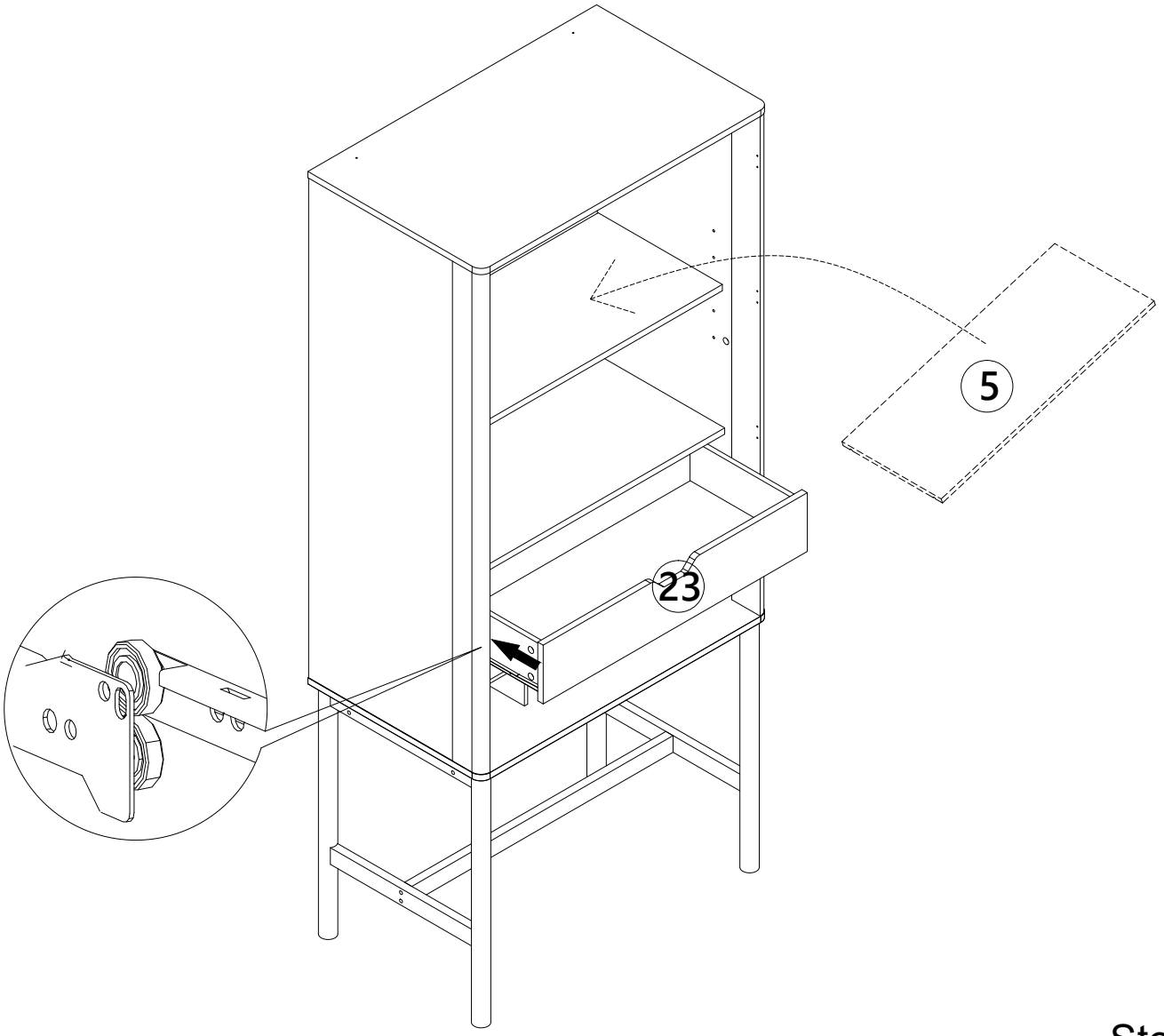

Step 9

Assembly Instructions

A 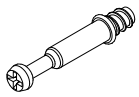	Cam Bolt x20
K 	Hinge x8
G 	Coil-spring hinge x2
E 	3.0x14mm Screw x20

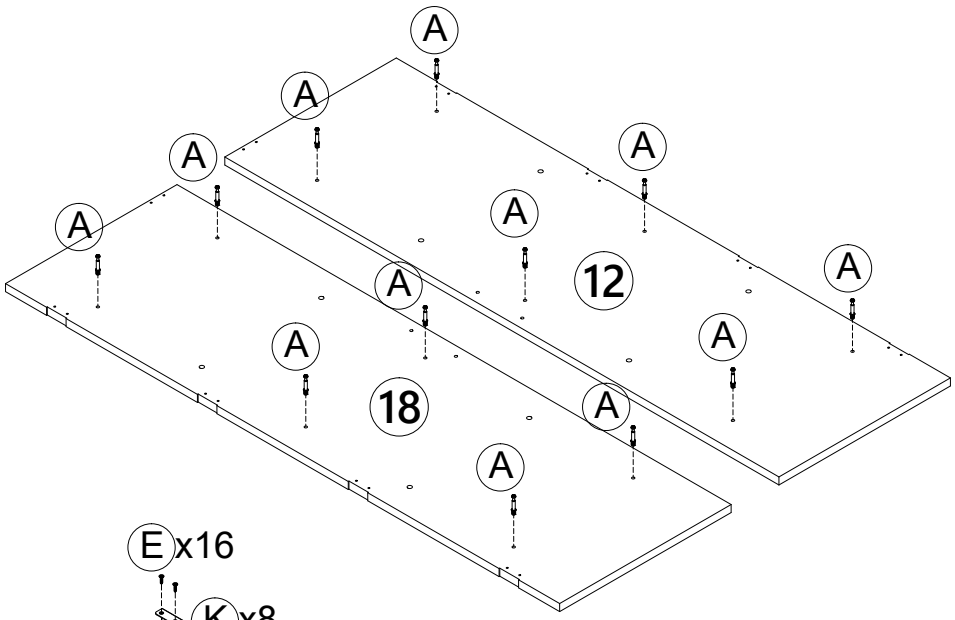

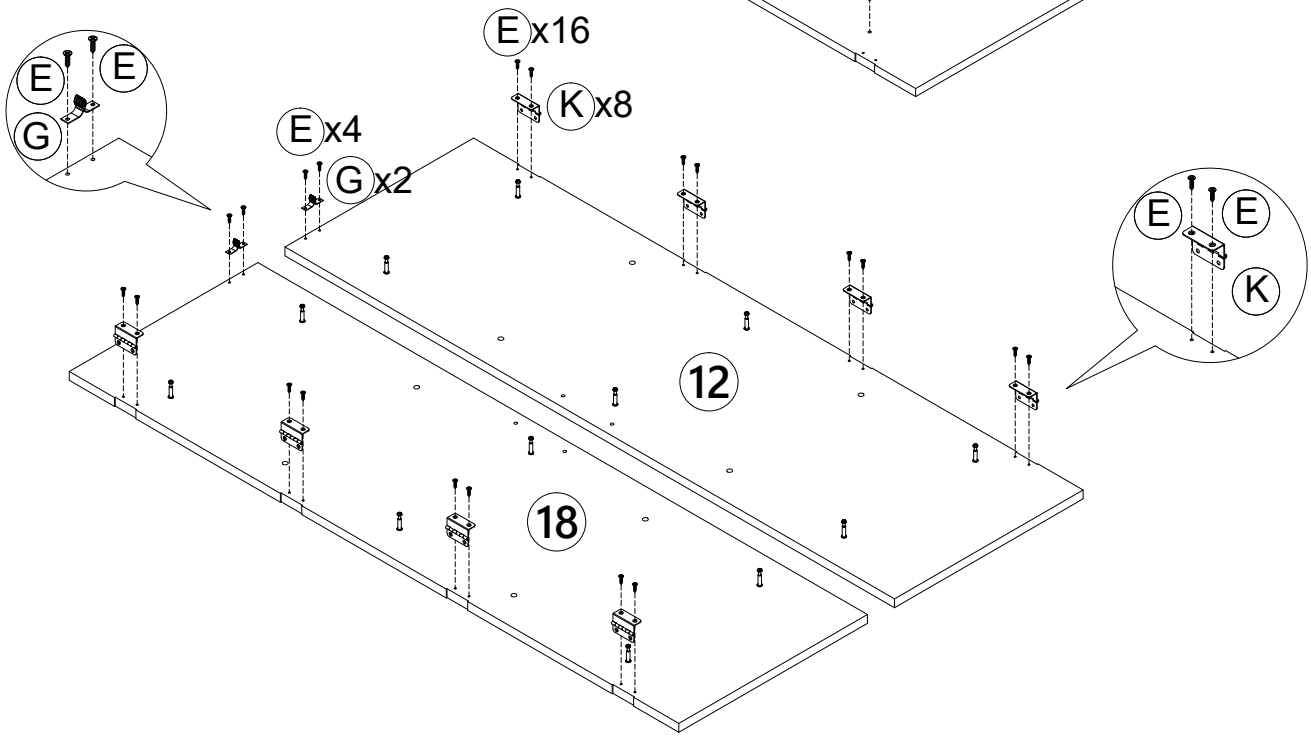

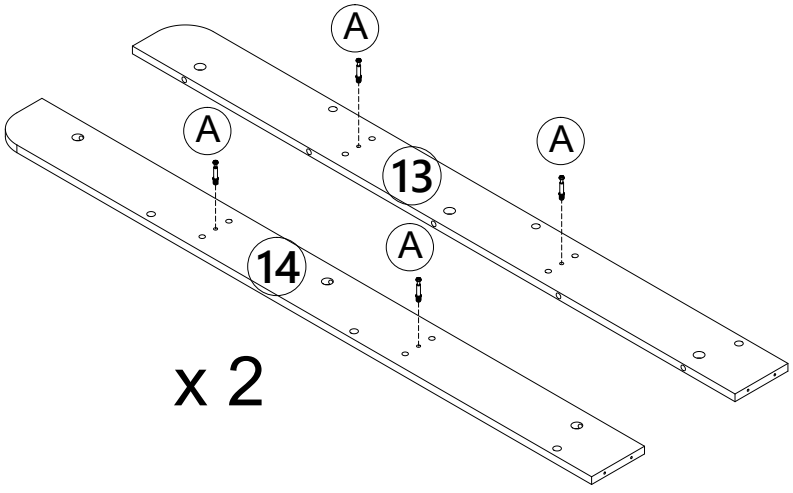

Step 10

Assembly Instructions

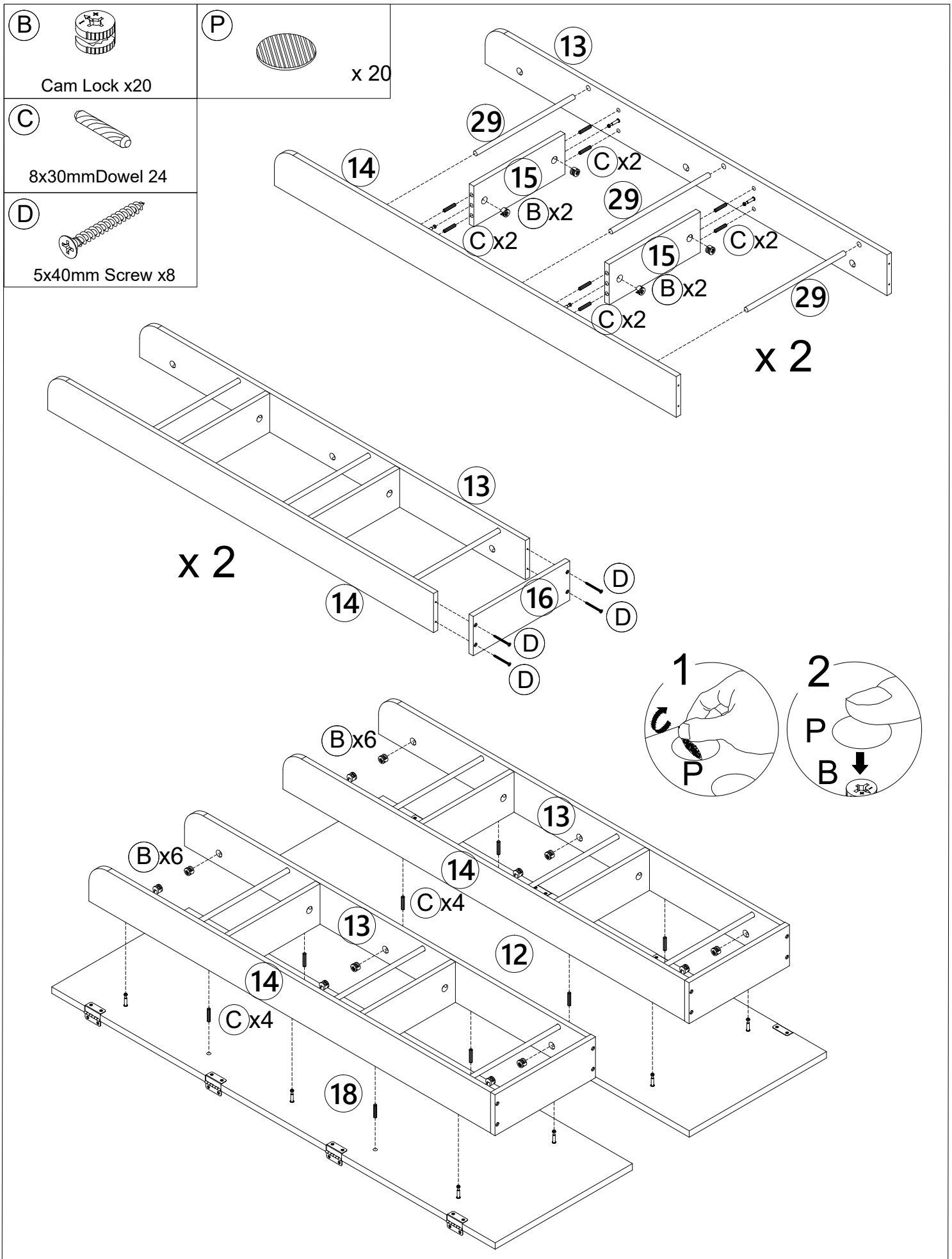

Step 11

Assembly Instructions

E



3.0x14mm Screw x16

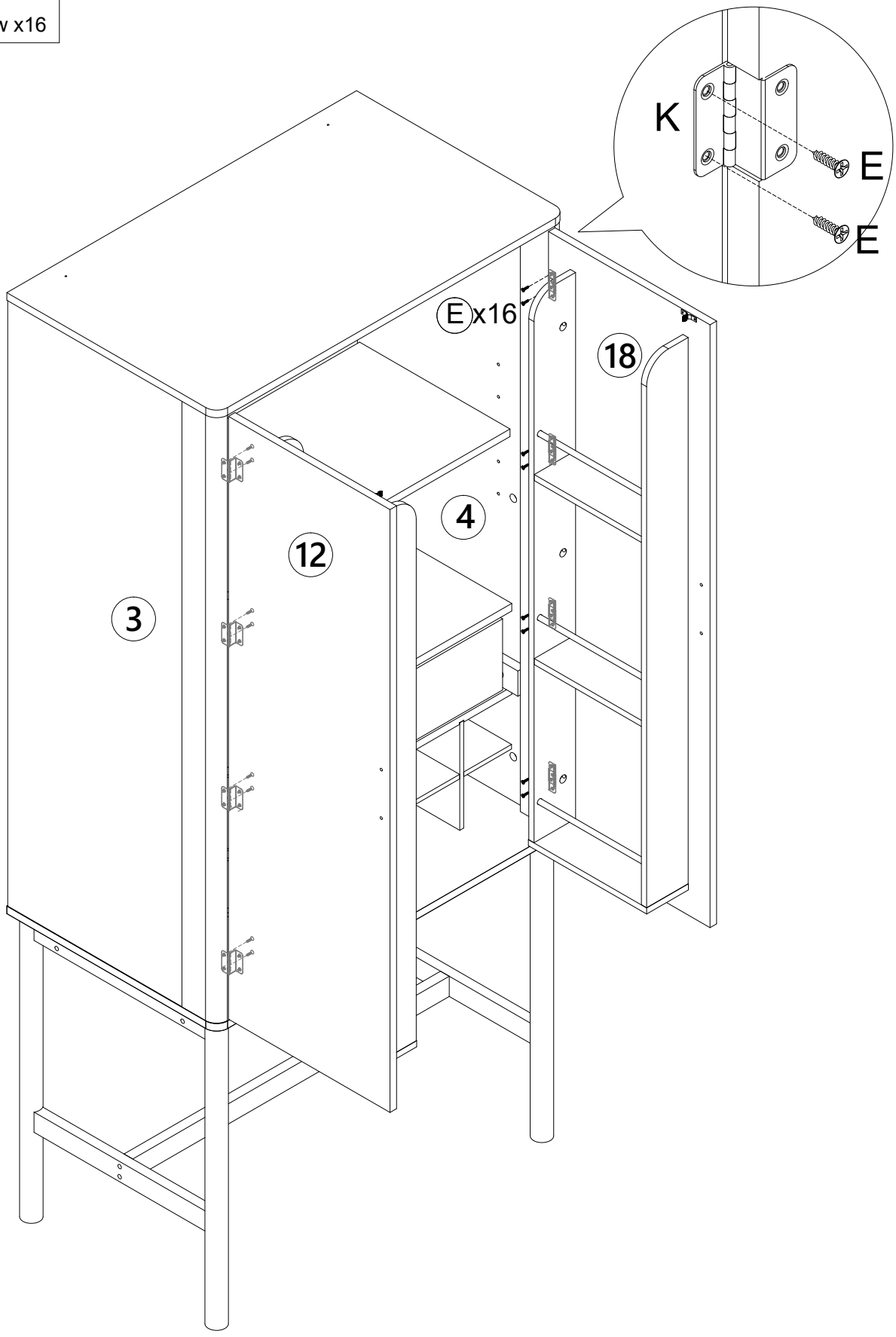

Step 12

Assembly Instructions

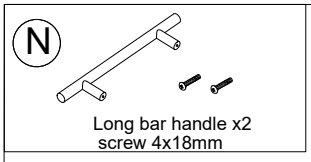

Long bar handle x2
screw 4x18mm

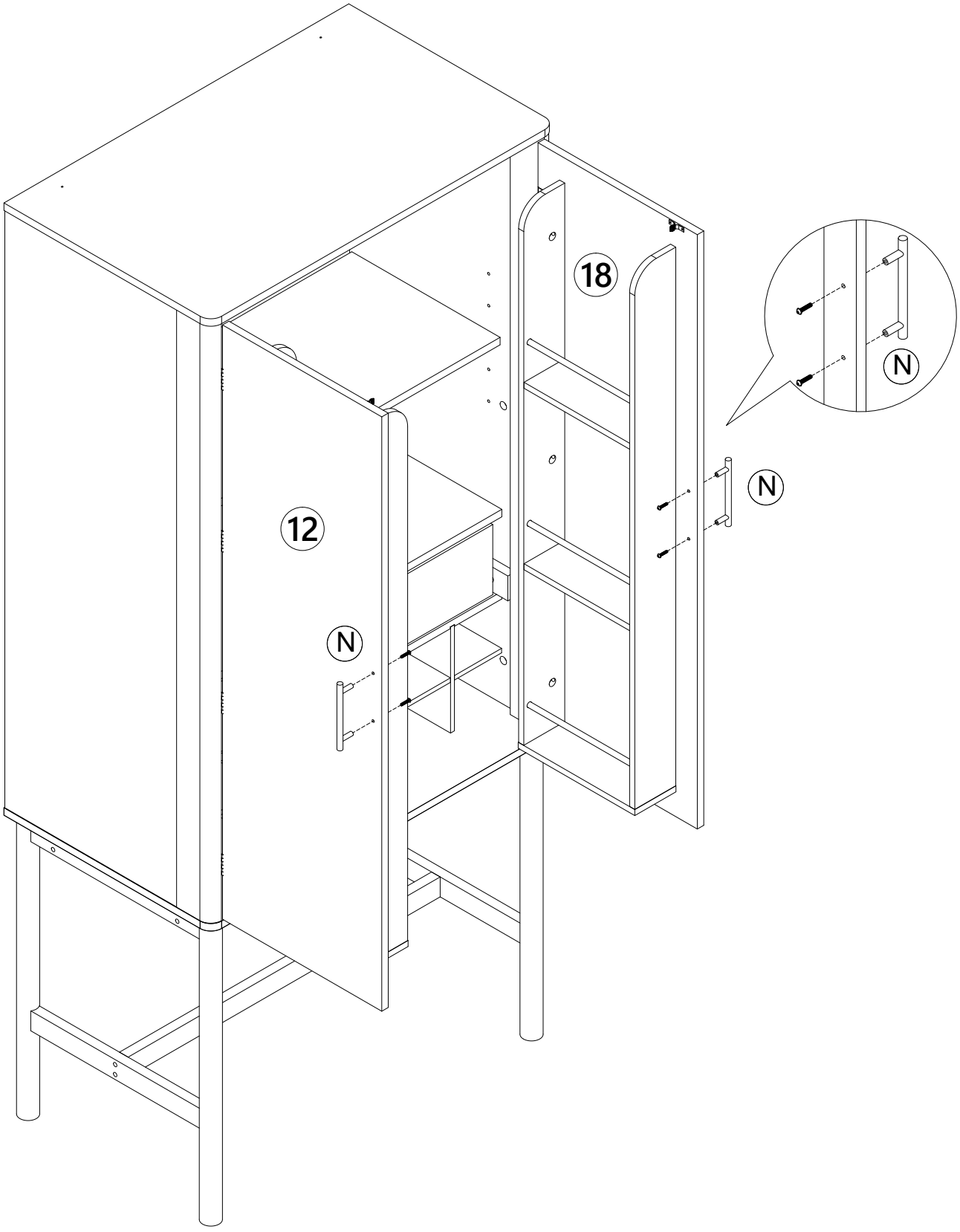

Step 13

Assembly Instructions

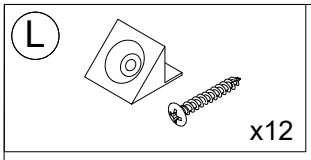

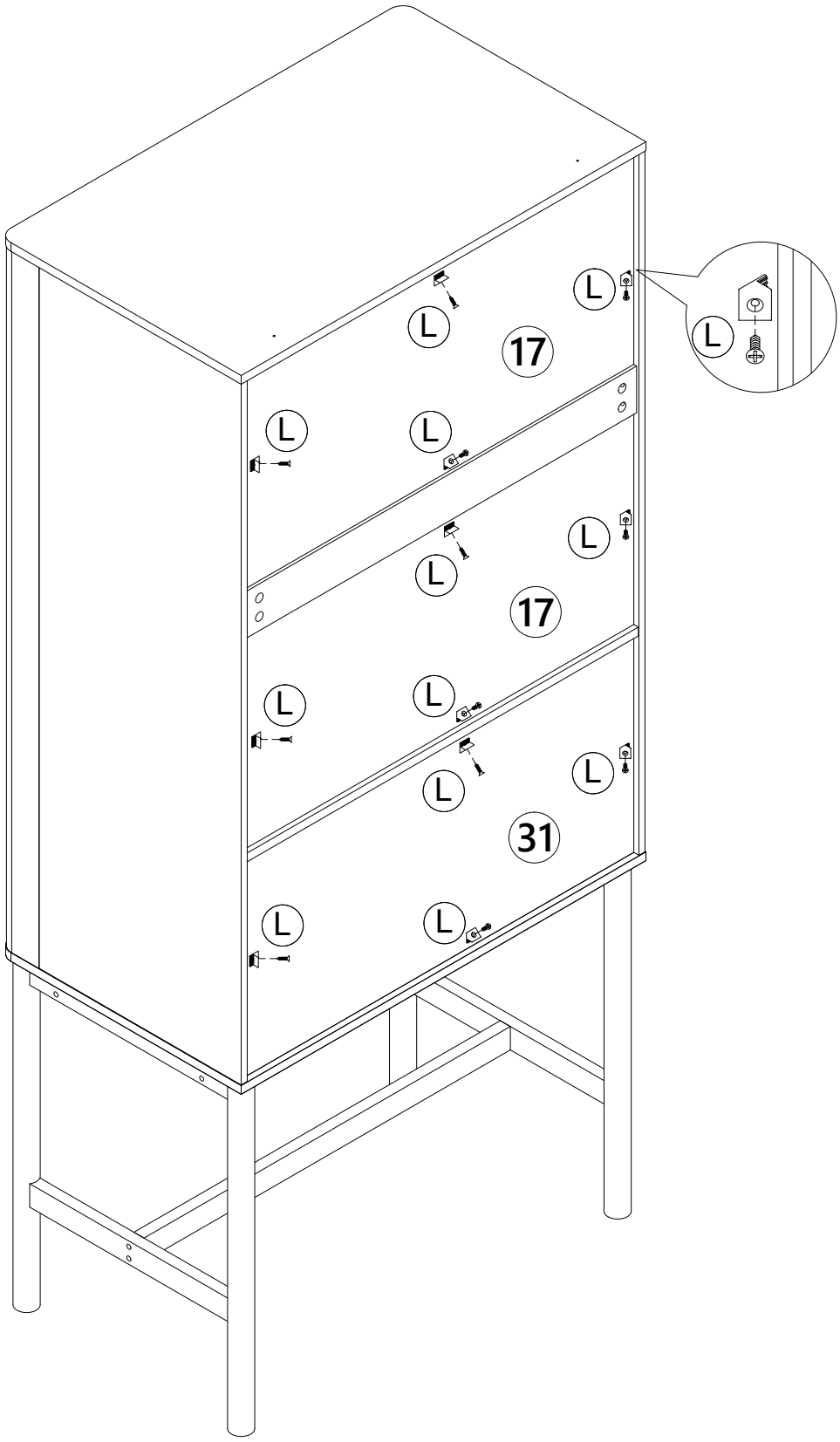

Step 14

Assembly Instructions



Anti-fall accessories x2

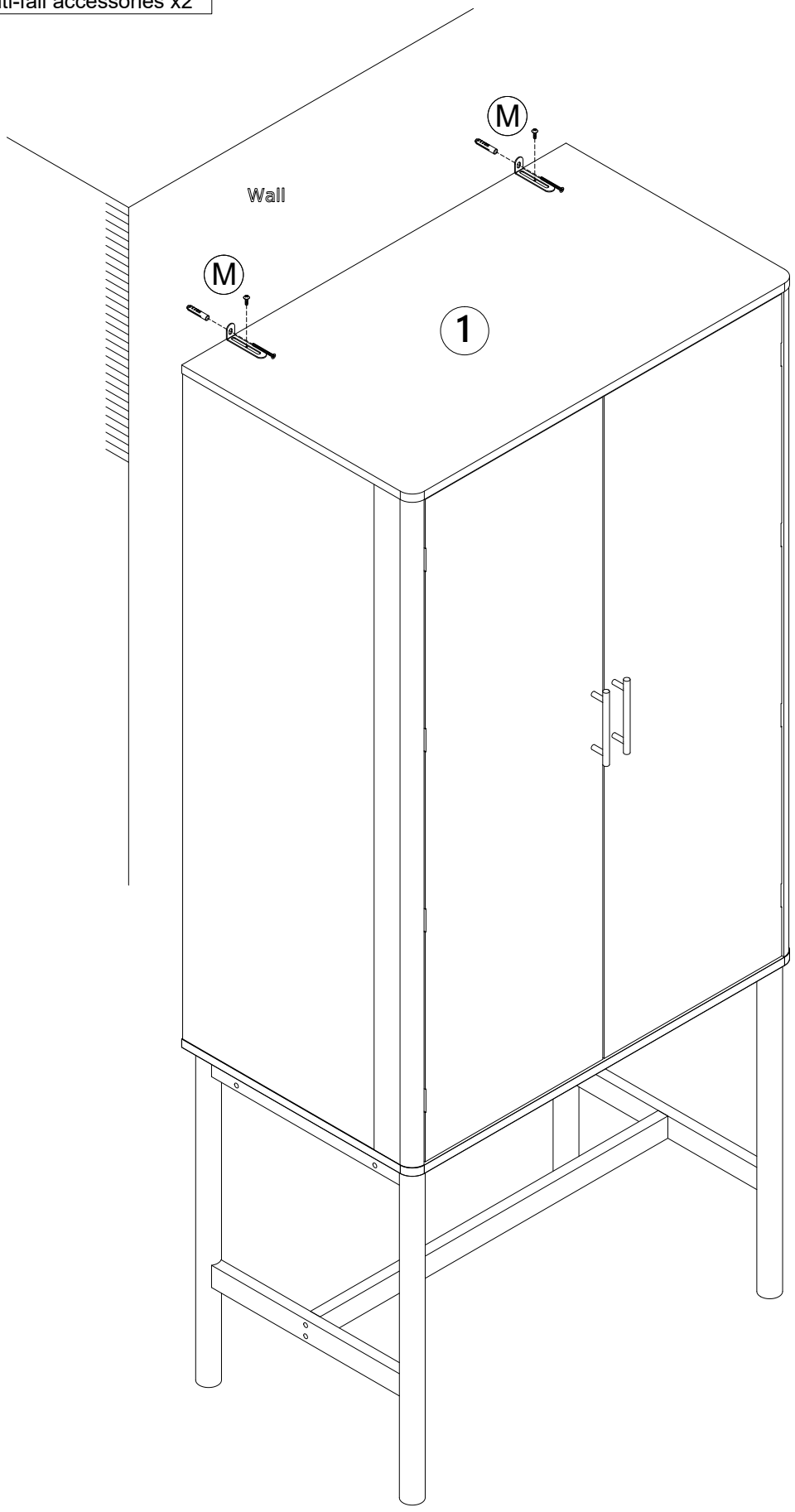

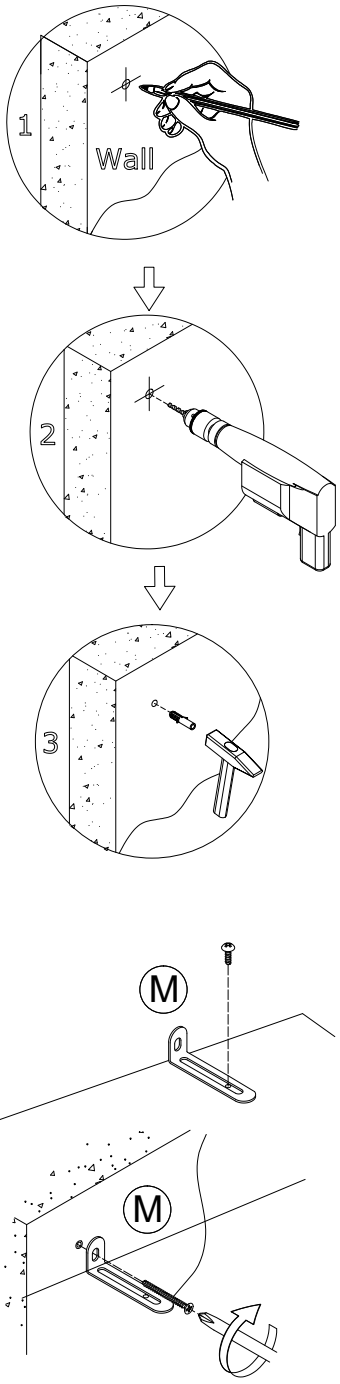

Step 15