ZEAFiVE®

DIMENSION DETAILS

BATHROOM VANITY TOP

Email: service@bestgosupplychaininc.com

MODEL.

HG4822-3K8-L

SCAN ME

PRODUCT INSTRUCTION VIDEO



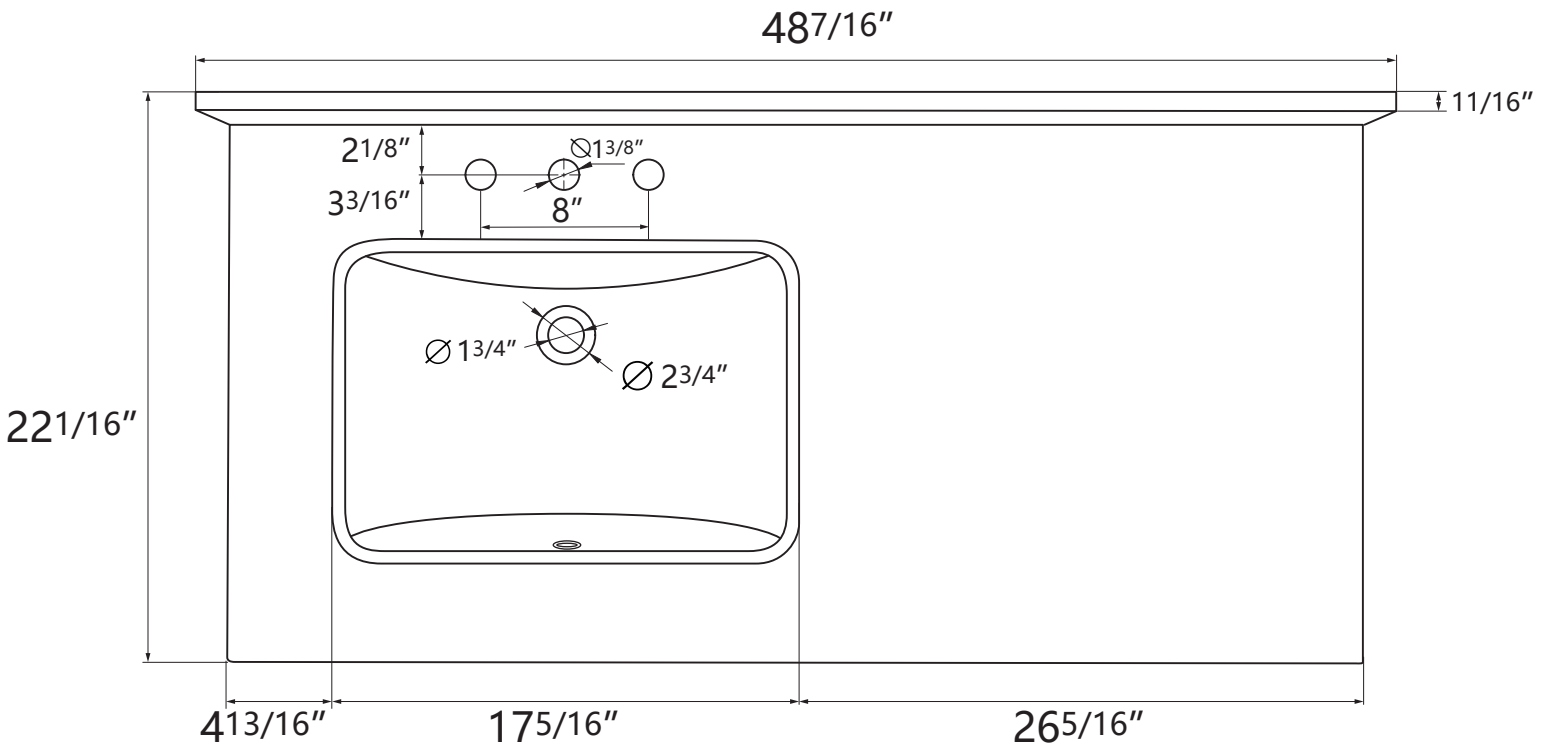

Top View

VANITY SIZE

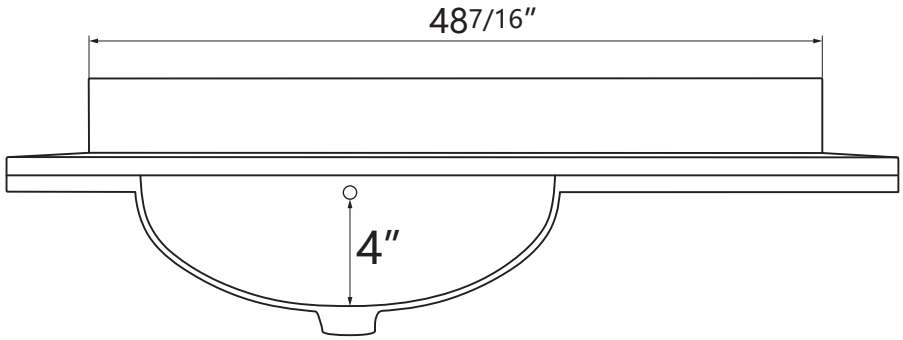

Front View

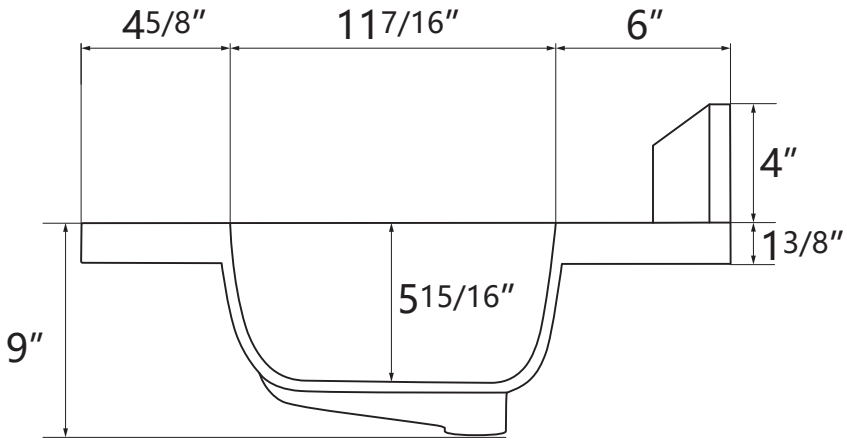

Side View