Note: There are three installation types for this bed.

1

The first type:
Two twin size beds with stoage in middle
Assembly steps start from Page 4 to page 23.

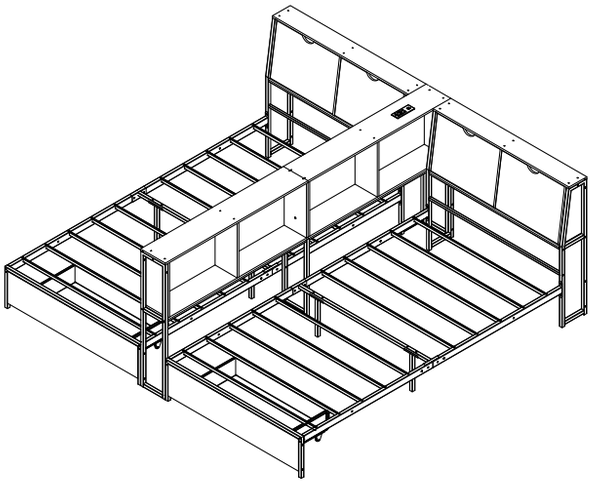

2

The second type:
One King size bed with side-storage
Assembly steps start from Page 24 to page 45.

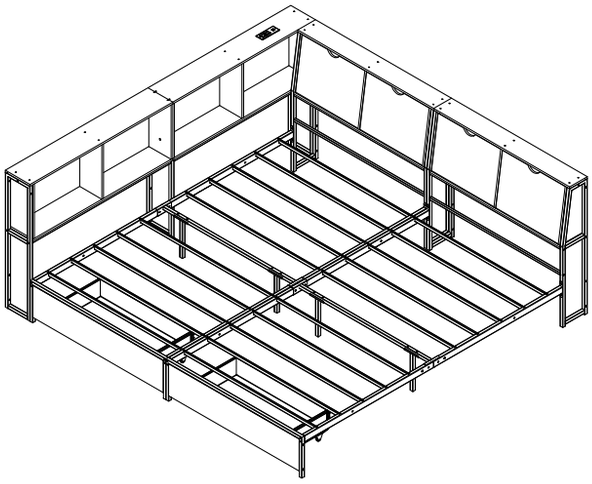

3

The third type:
Two twin size beds(one bed with side-storage)
Assembly steps start from Page 46 to page 65.

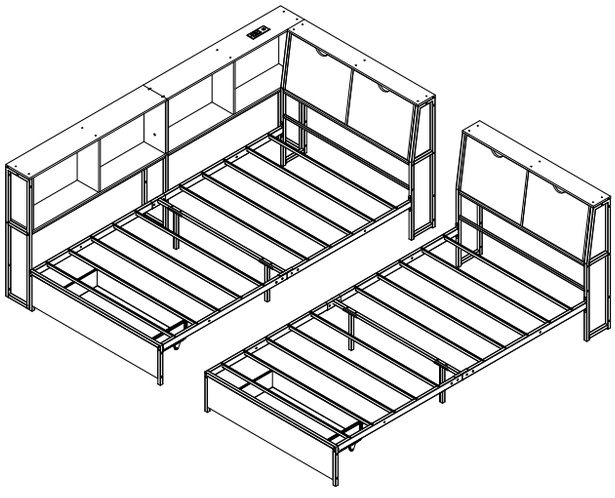

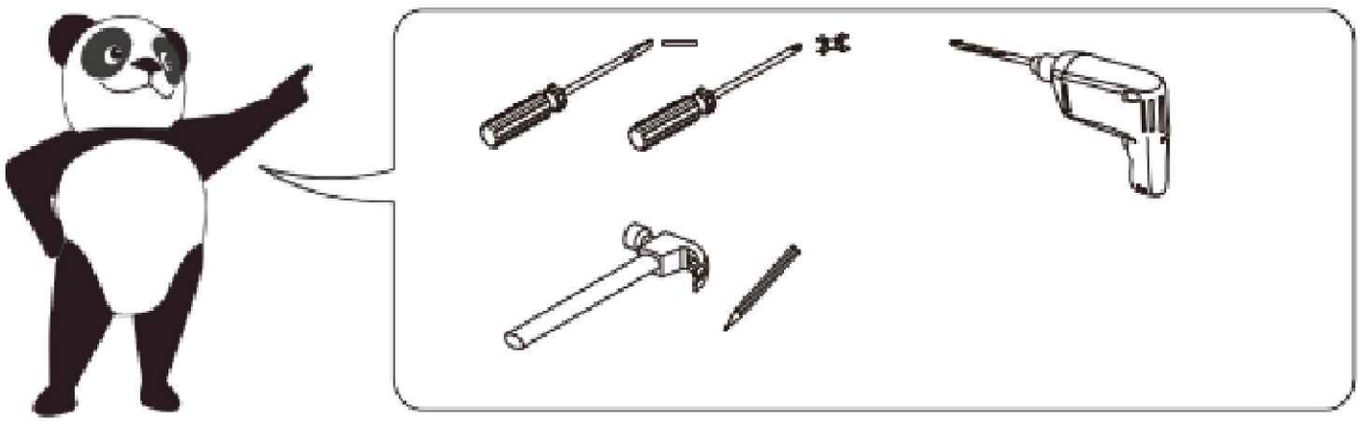

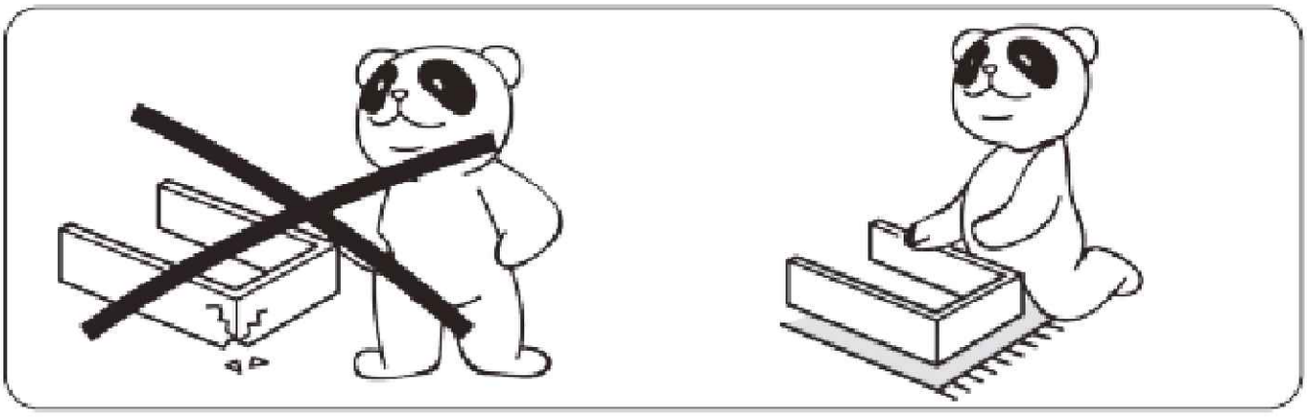

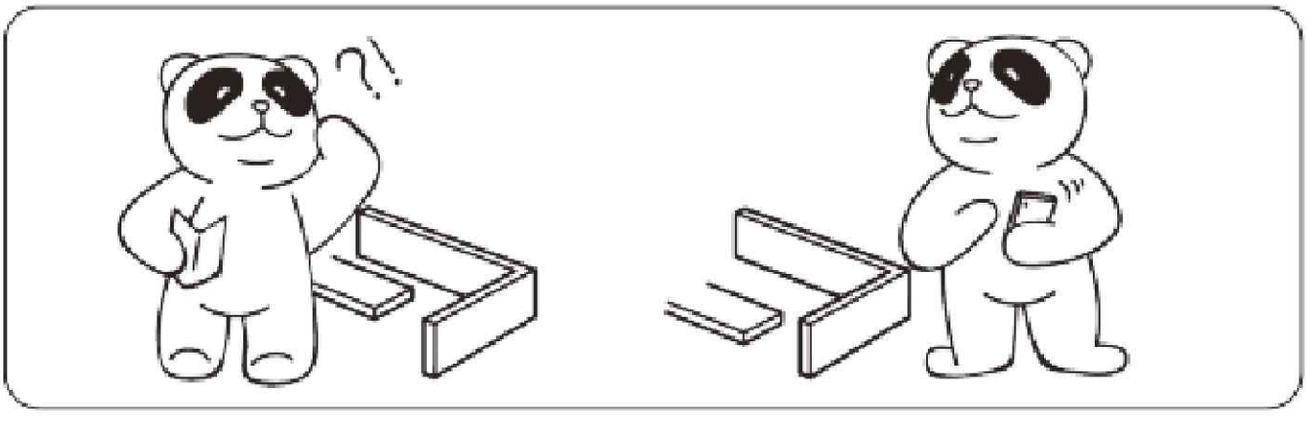

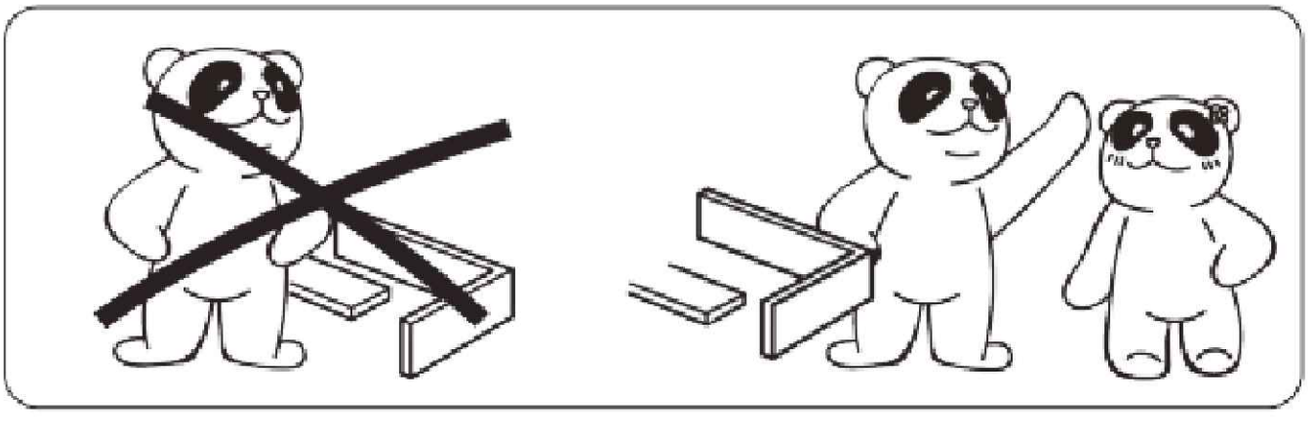

HARDWARE LIST

A 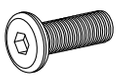 6*28mm 22PCS	B 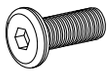 6*25mm 32PCS	C 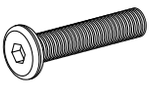 6*50mm 6PCS	D 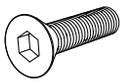 6*40mm 12PCS	E 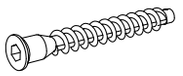 5*40mm 48PCS
F  4*28mm 32PCS	G 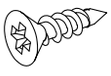 4*10mm 18PCS	H  4*14mm 8PCS	I  4*18mm 8PCS	J 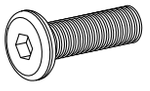 8*35mm 8PCS
K 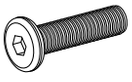 6*40mm 12PCS	L 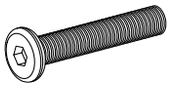 6*60mm 2PCS	M  6*15mm 2PCS	N 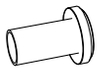 6*15mm 2PCS	O  4*11mm 2PCS
P 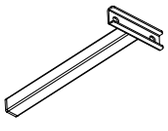 23.5cm 4PCS	Q  m4 32PCS	R  m8 8PCS	S  m8 8PCS	T  m6 16PCS
U 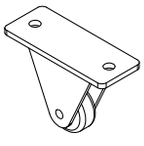 1.0 8PCS	V 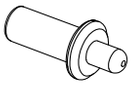 8PCS	W 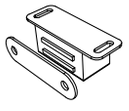 4PCS	X 4PCS	Y 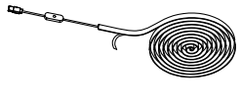 1PC
Z 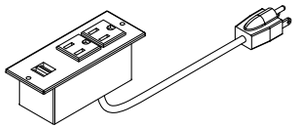 1PC	a 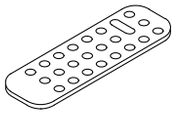 1PC	b 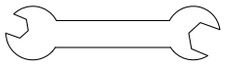 m8&m6 1PC	c  m4 1PC	d 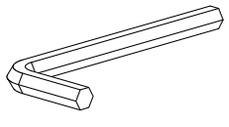 m8 1PC
e 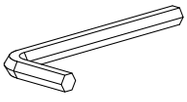 m6 1PC	f 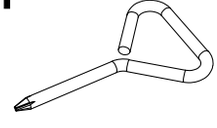 1PC	g 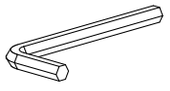 m4 1PC		

The first type:
Two twin size beds with stoage in middle

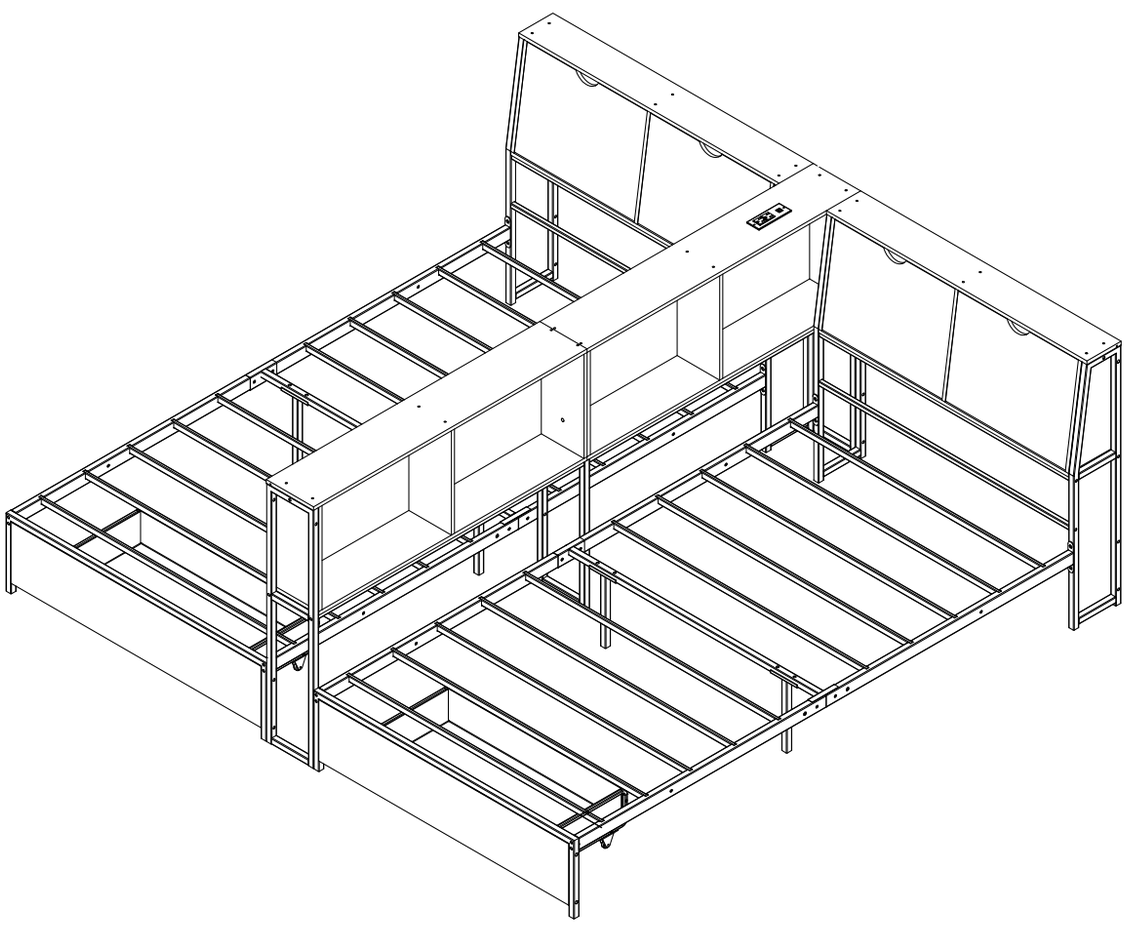

Note:
1.Should be assembled on flat ground to keep balance.
2.Before completing the installation, do not tighten the screws.

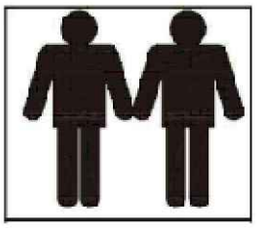

It needs at least
two people to install.



Before starting the assembly, you must read the whole manual and follow the instructions

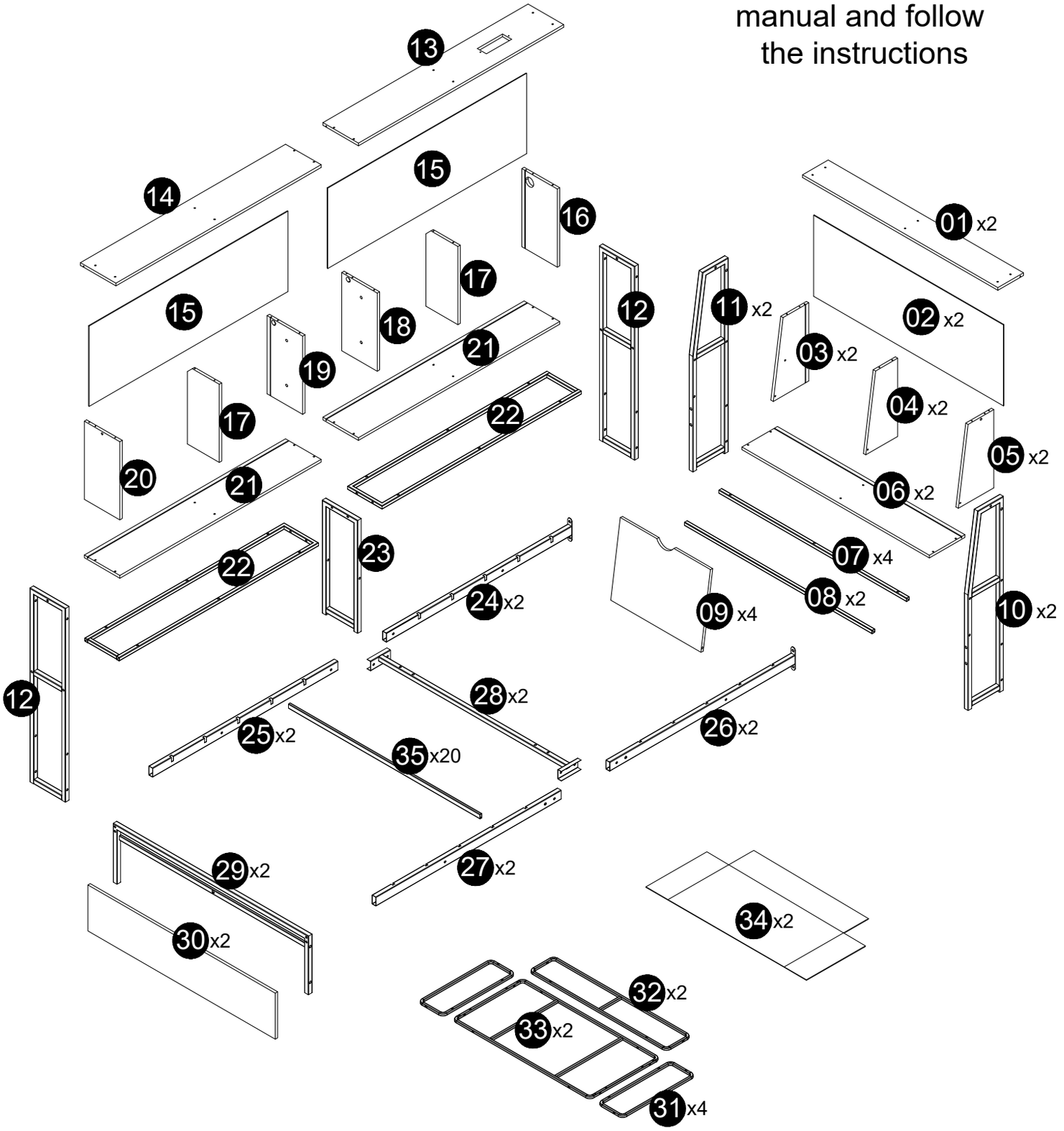

1

G	4*10mm	8pcs
W		4pcs
f		1pc

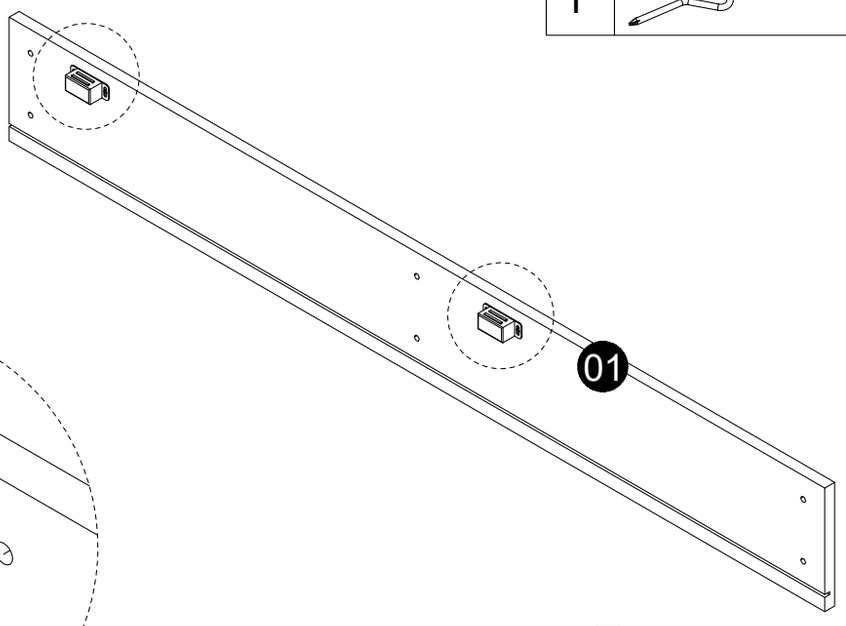

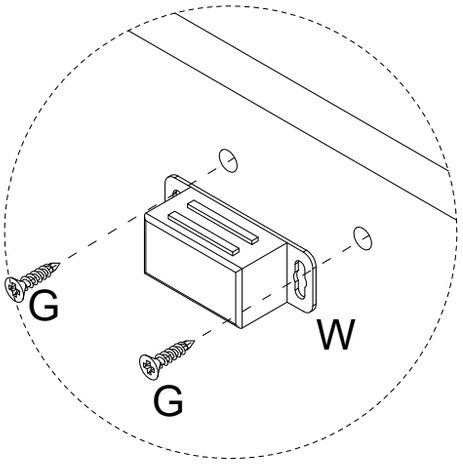

x2

2

G	4*10mm	8pcs
W		4pcs
f		1pc

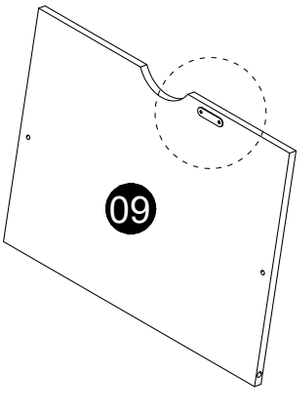

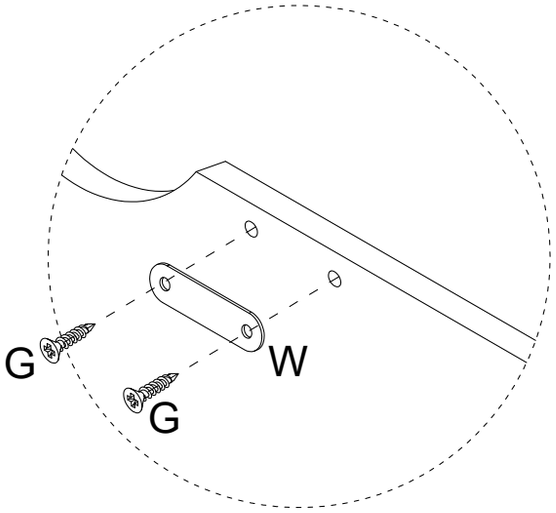

x4

3

E	5*40mm	12pcs
g	M4	1pc

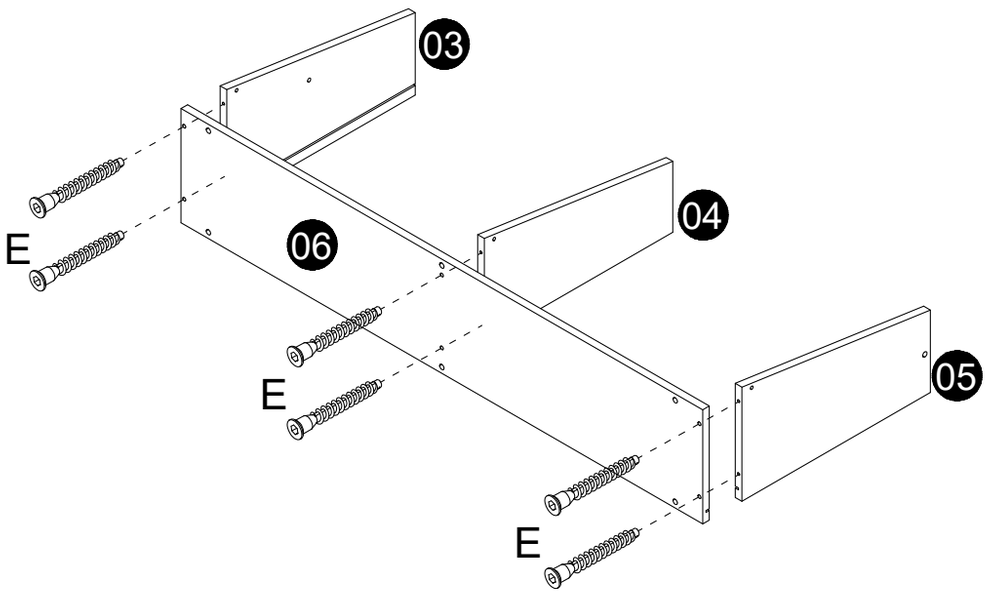

x2

4

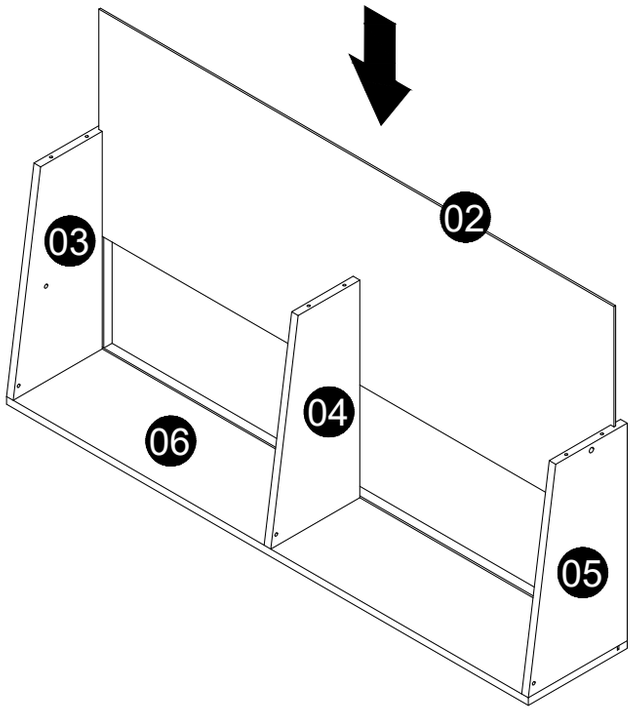

x2

5

E	5*40mm	12pcs	
g	M4	1pc	

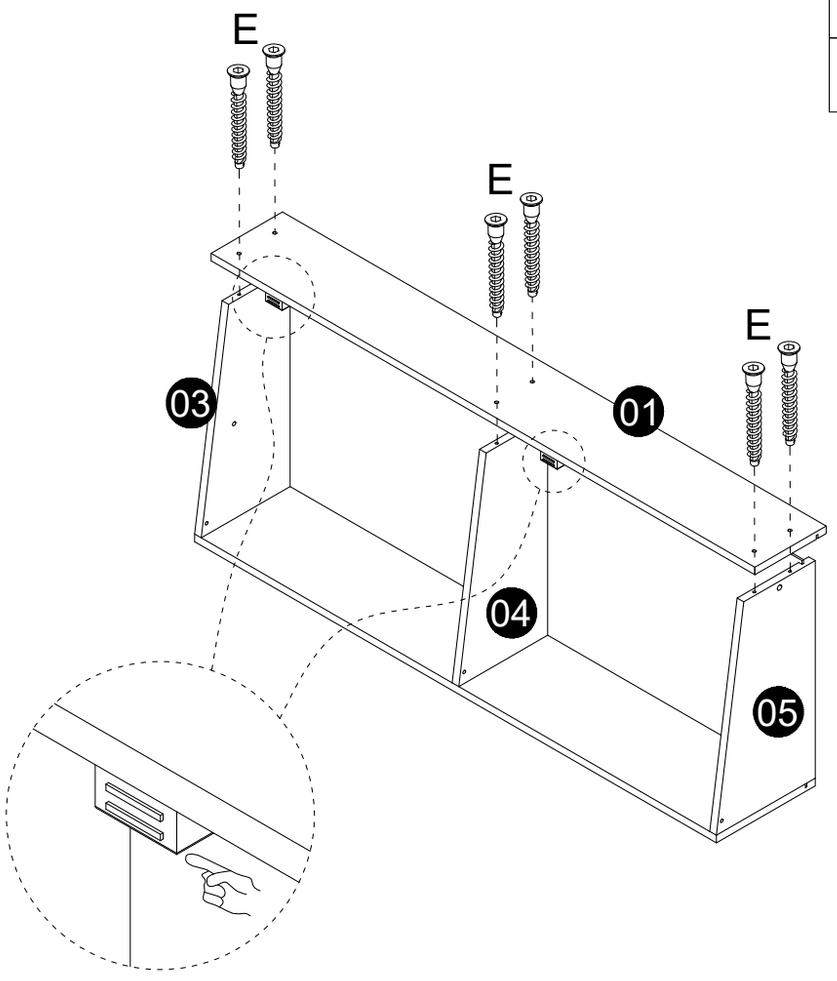

x2

6

e	M6	1pc	B	6*25mm	12pcs

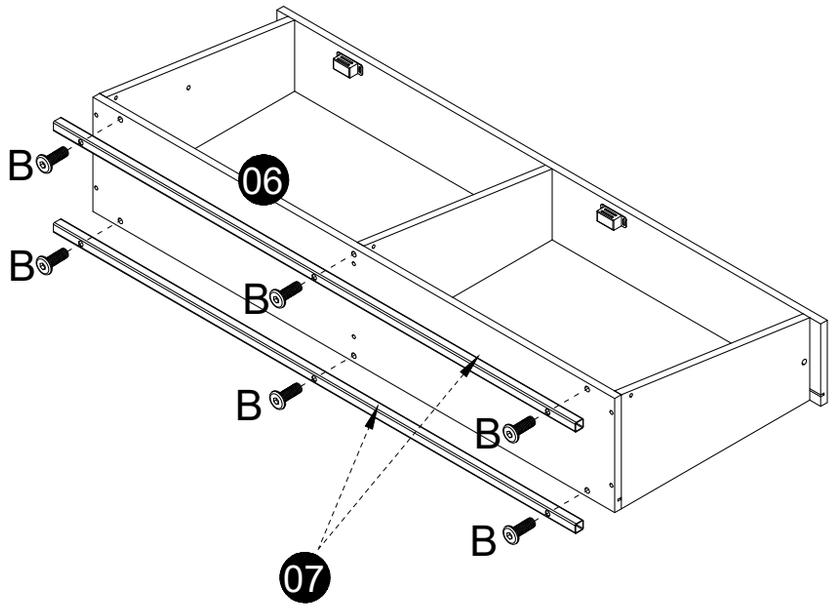

x2

7

A	6*28mm	4pcs
D	6*40mm	8pcs
e	M6	1pc

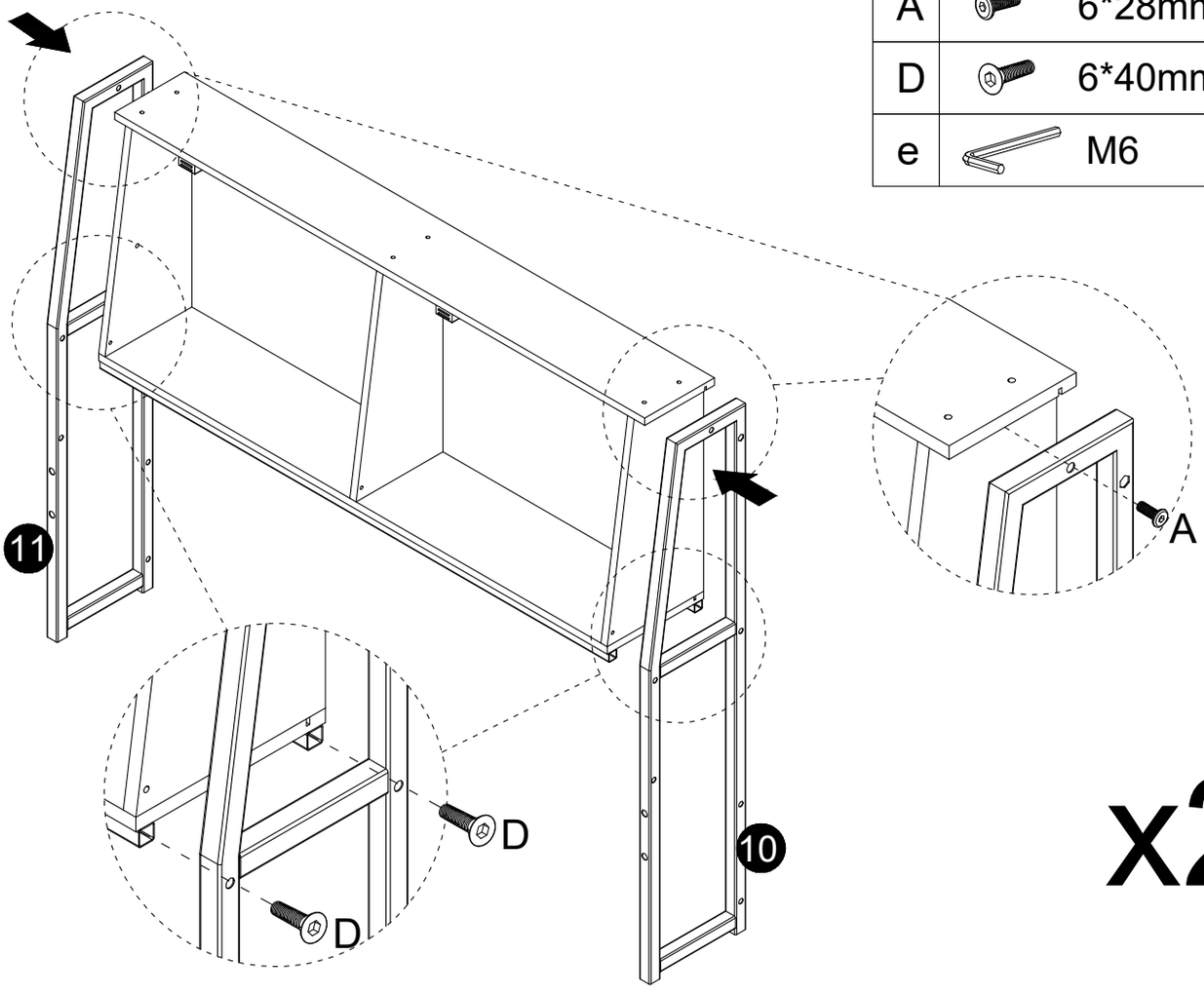

x2

8

D	6*40mm	4pcs
e	M6	1pc

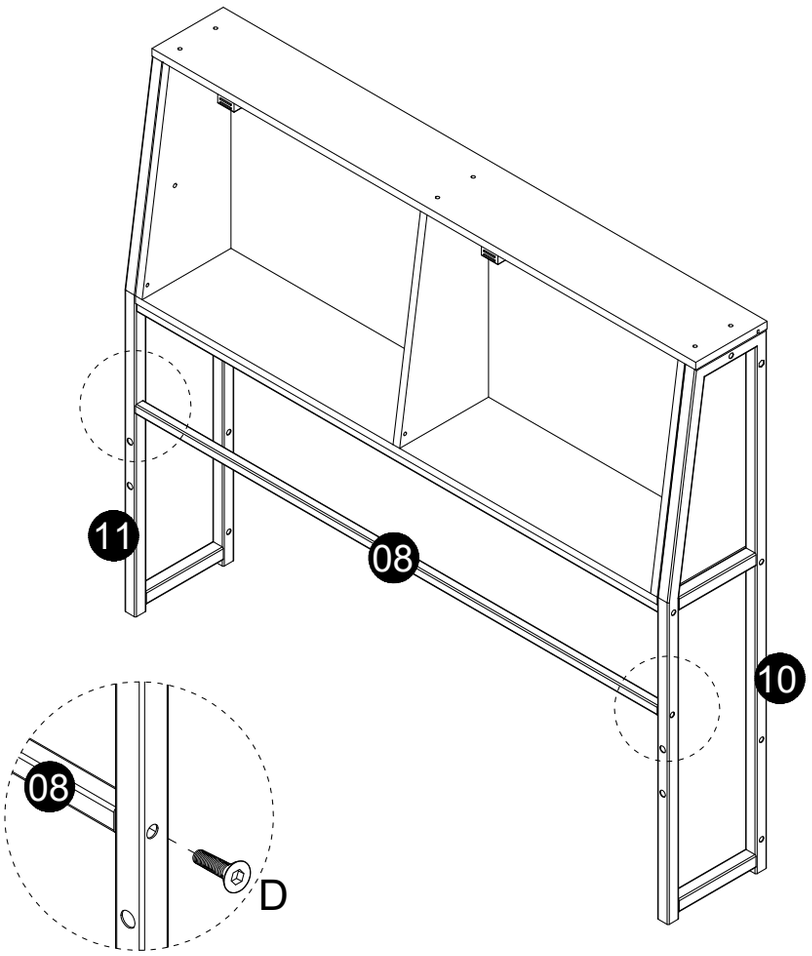

x2

9

V		8pcs

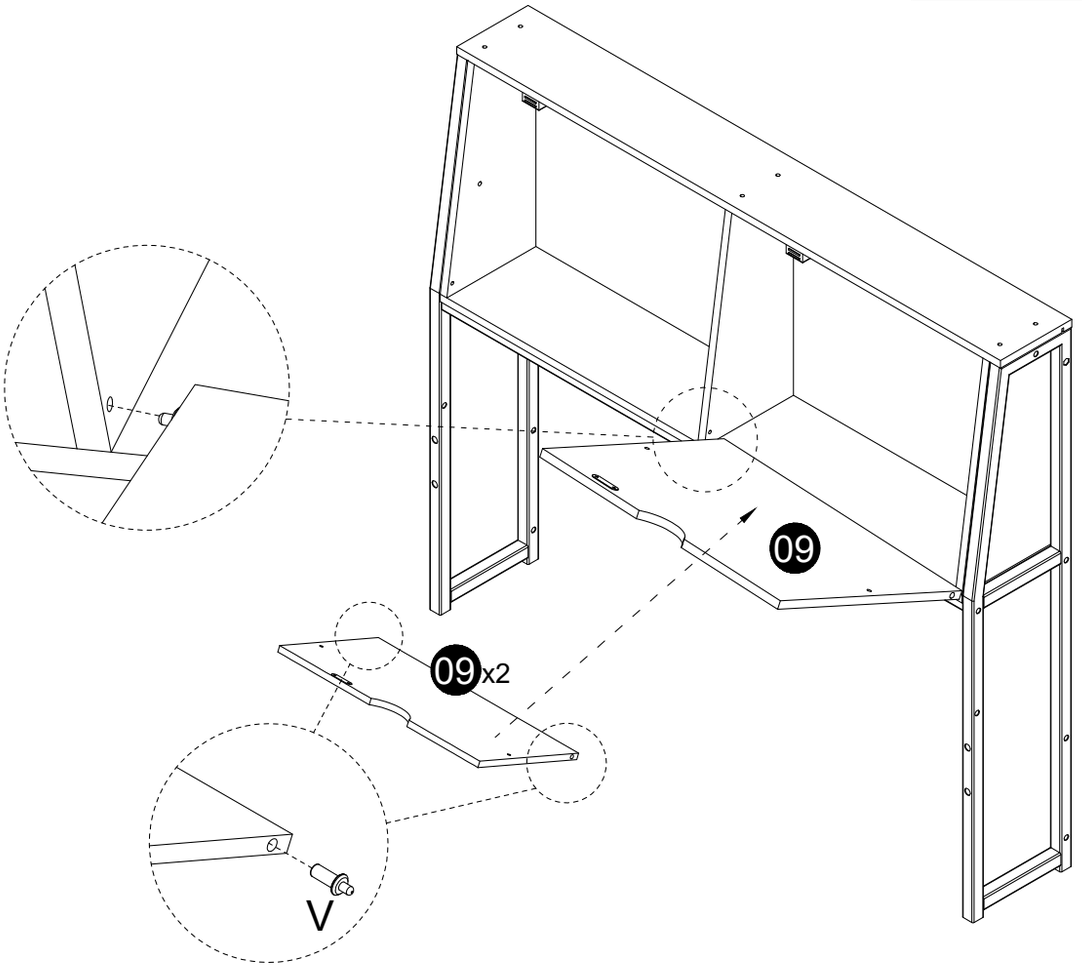

x2

10

H	 4*14mm	8pcs
X		4pcs
f	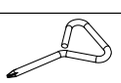	1pc

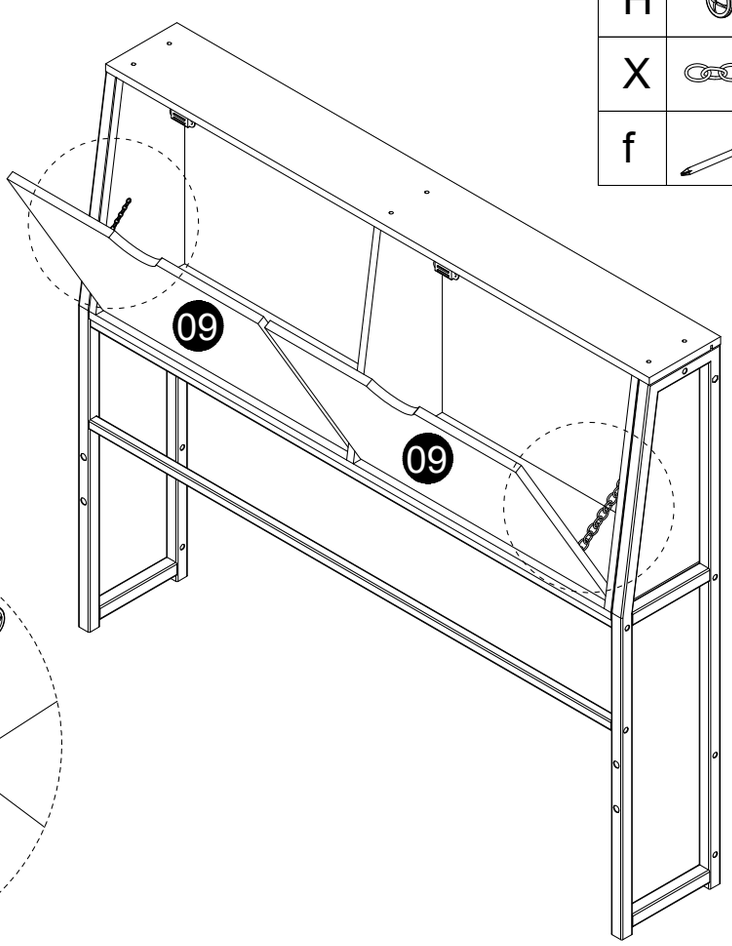

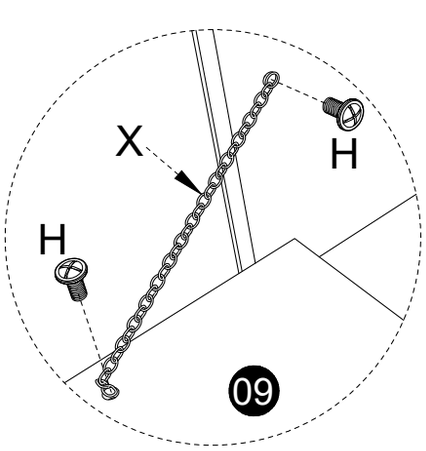

x2

11

B		6*25mm	8pcs		
e		M6	1pc		

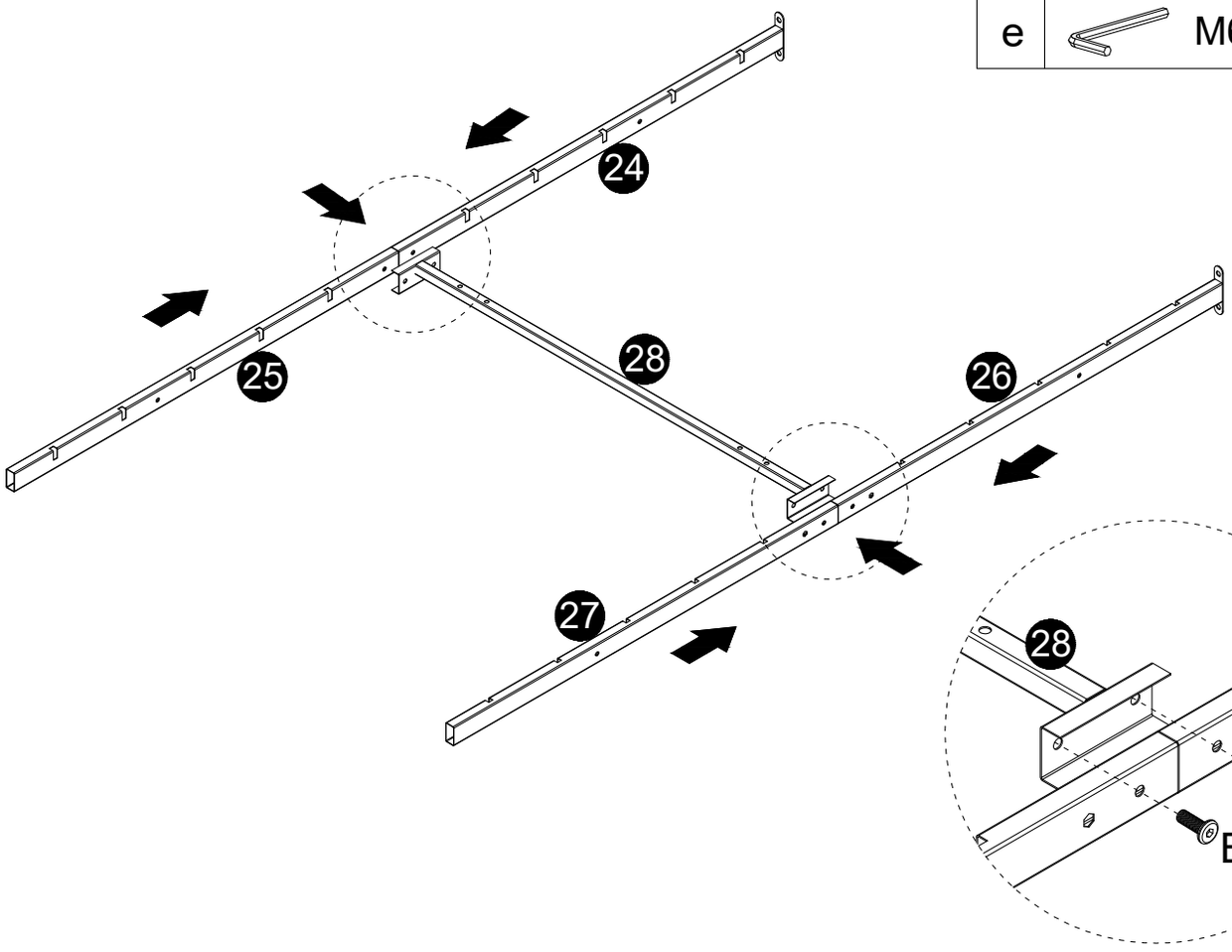

12

b		M8&M6	1pc	A		6*28mm	8pcs
e		M6	1pc	T		M6	8pcs
				P		23.5cm	4pcs

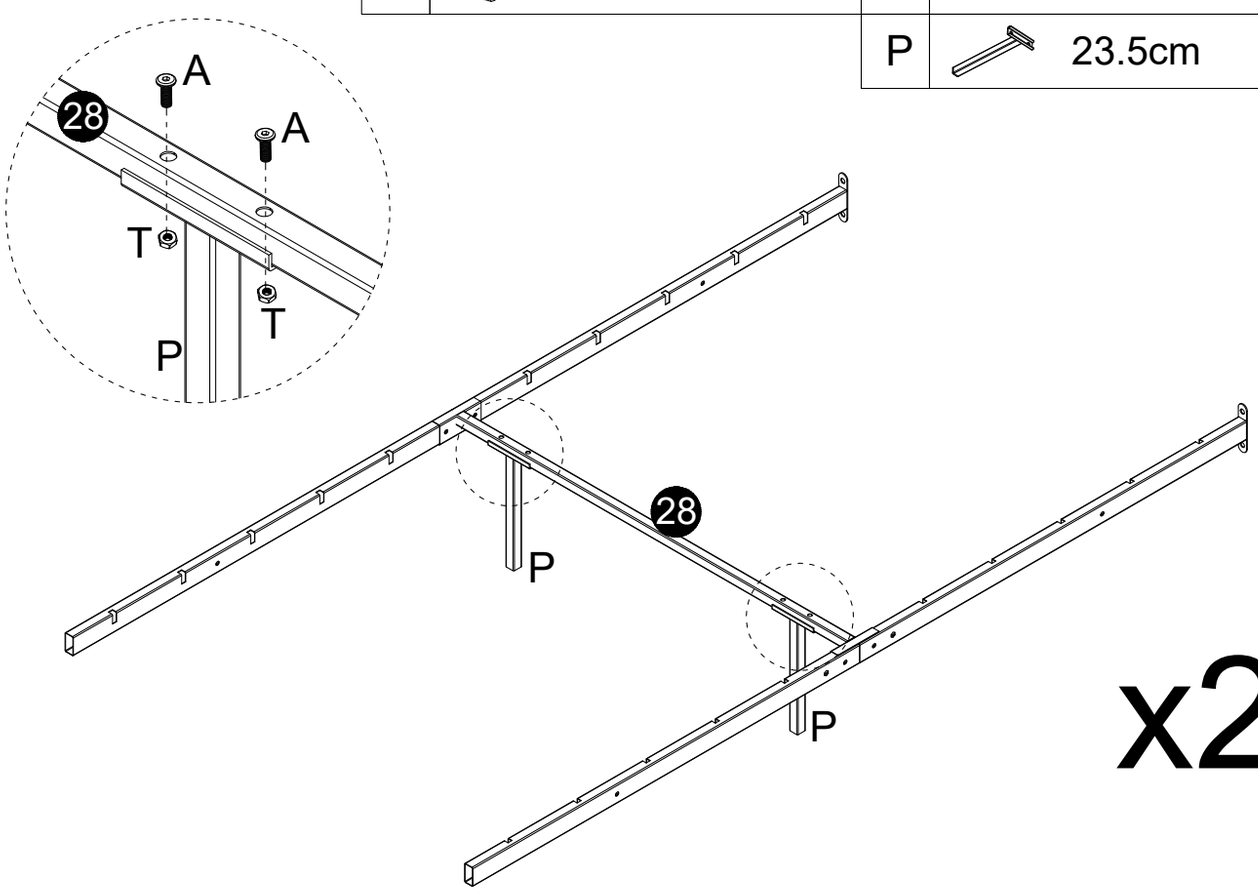

13

K	6*40mm	8pcs
e	M6	1pc

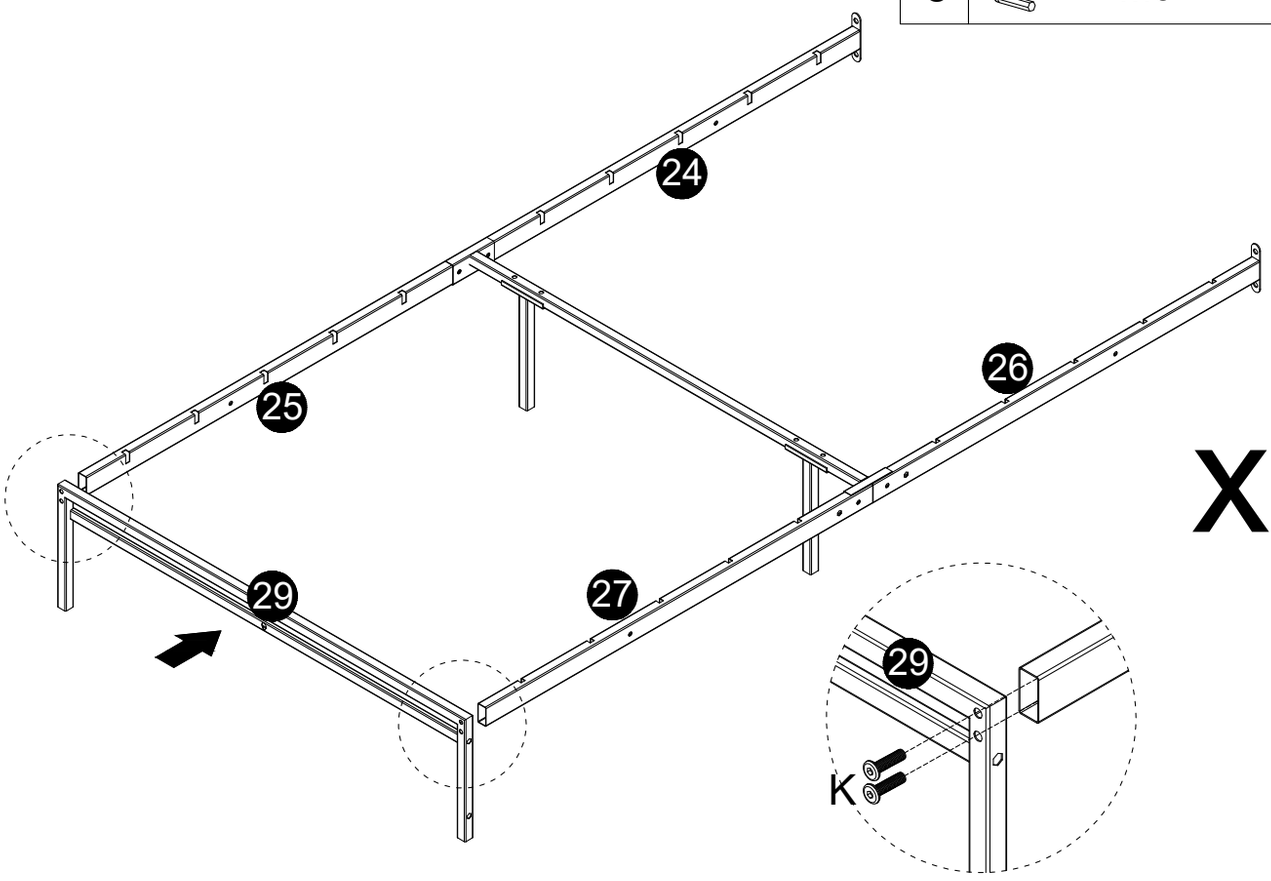

14

b	M8&M6	1pc

J	8*35mm	8pcs
S	M8	8pcs
R	M8	8pcs
d	M8	1pc

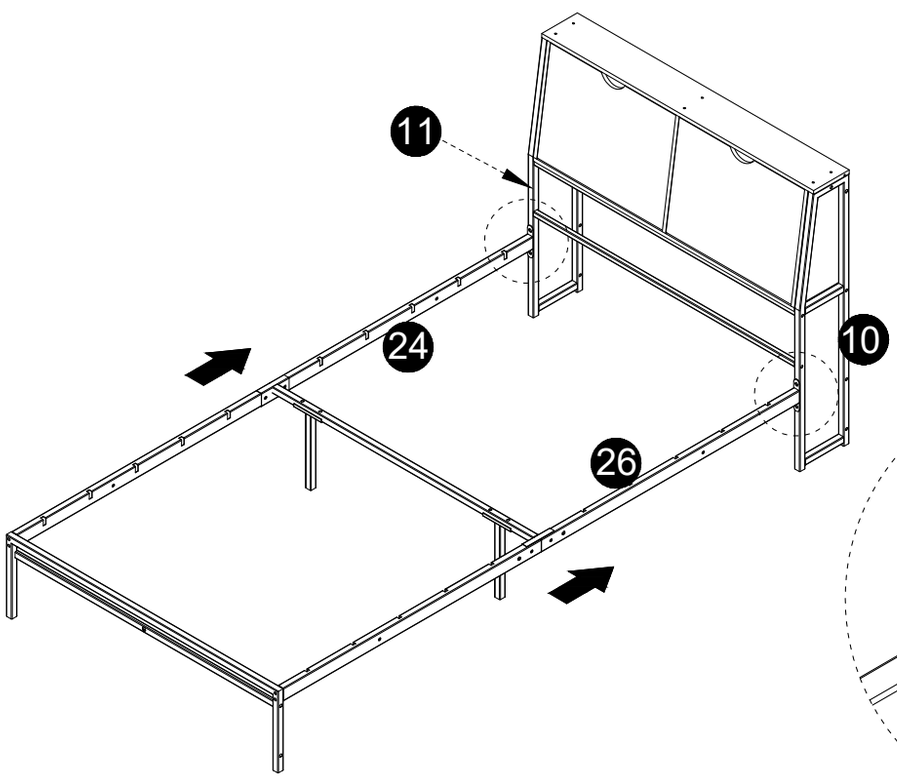

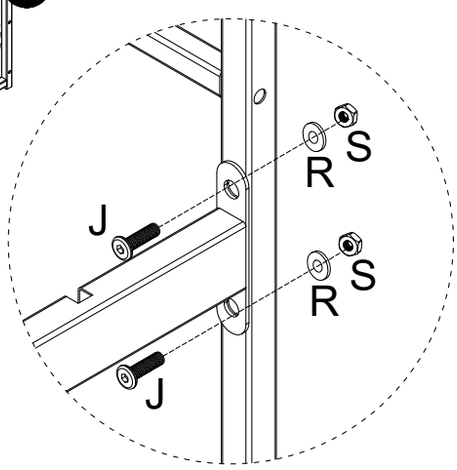

15

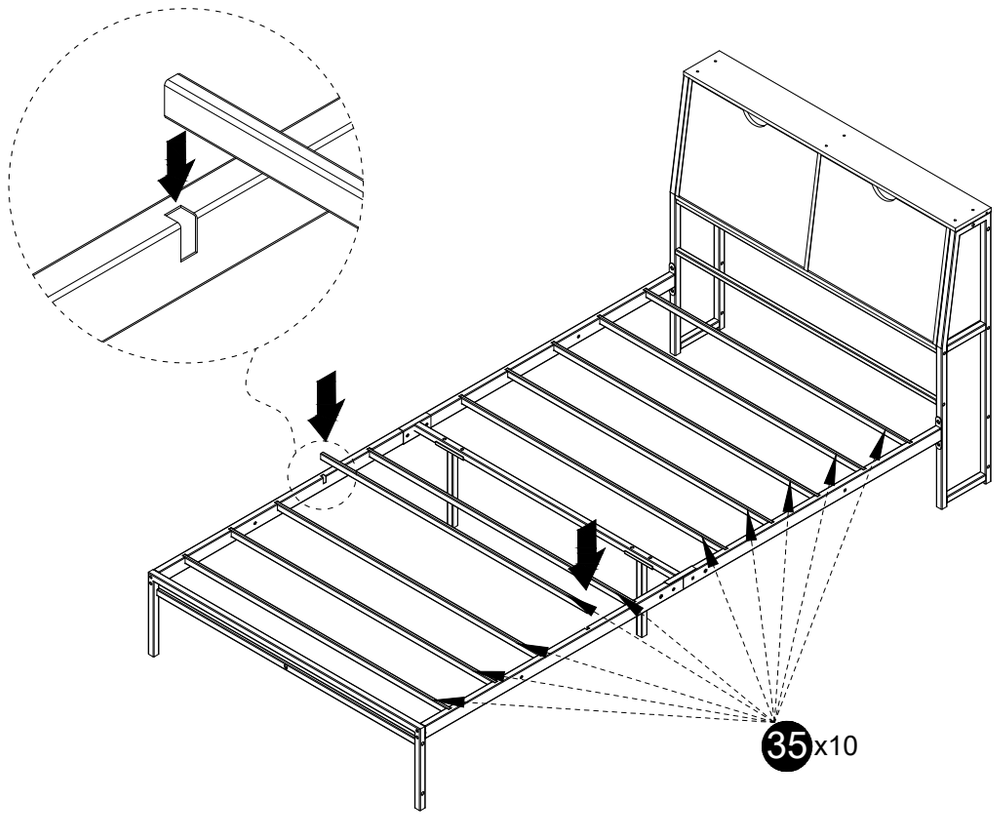

x2

16

E	5*40mm	6pcs
g	M4	1pc

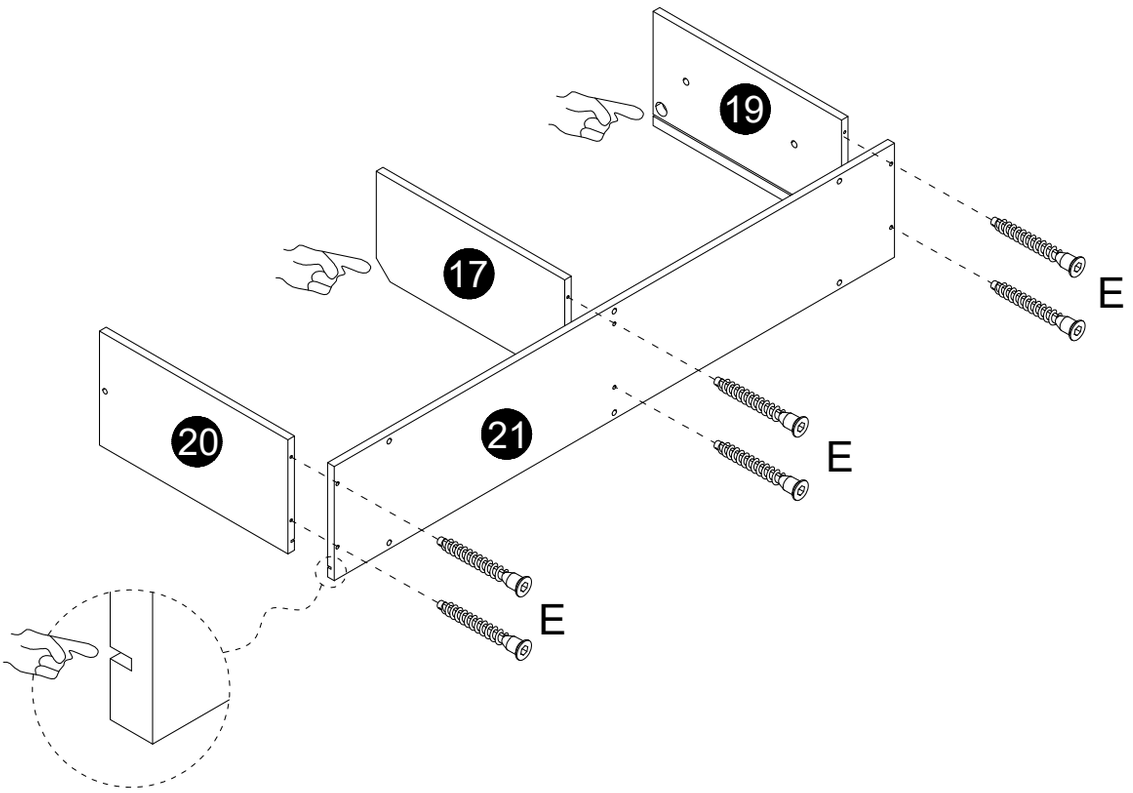

17

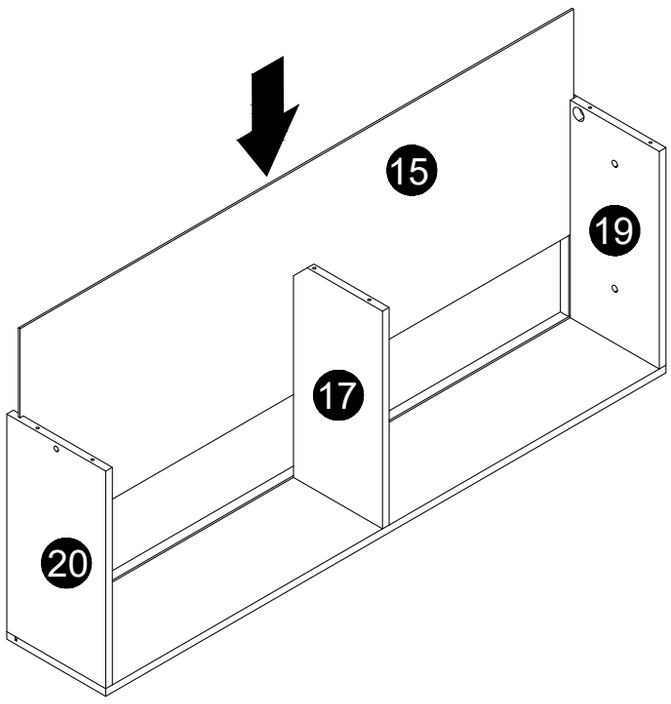

18

E	5*40mm	6pcs
g	M4	1pc

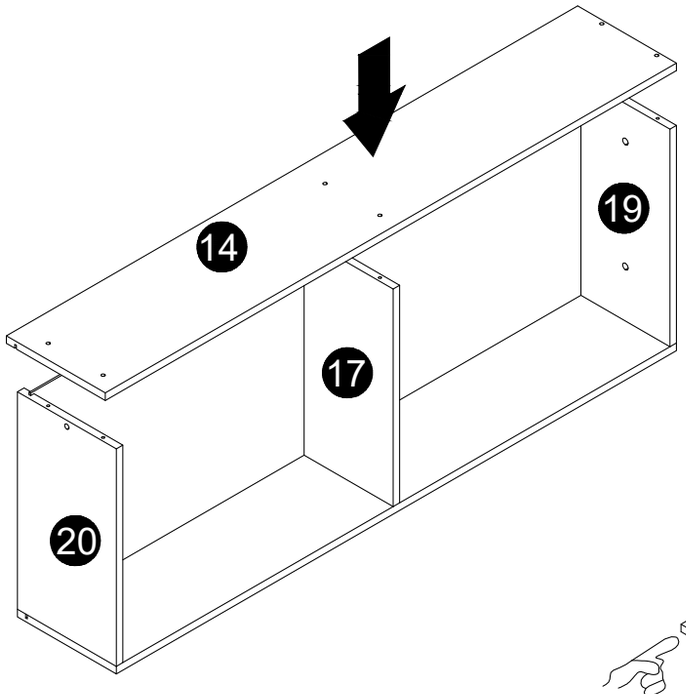

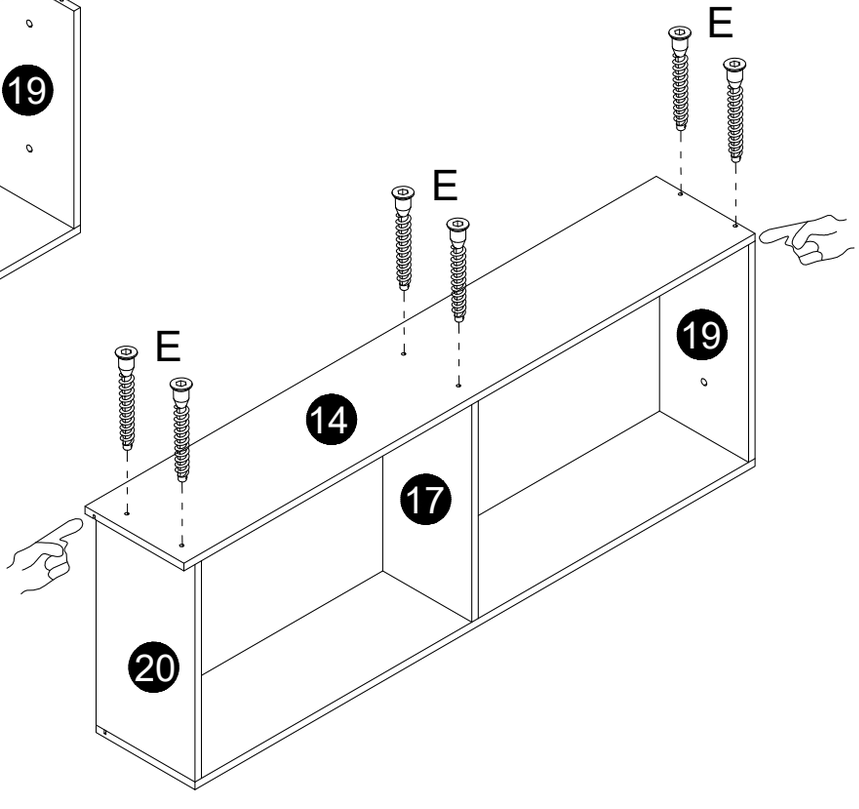

19

E	5*40mm	6pcs
g	M4	1pc

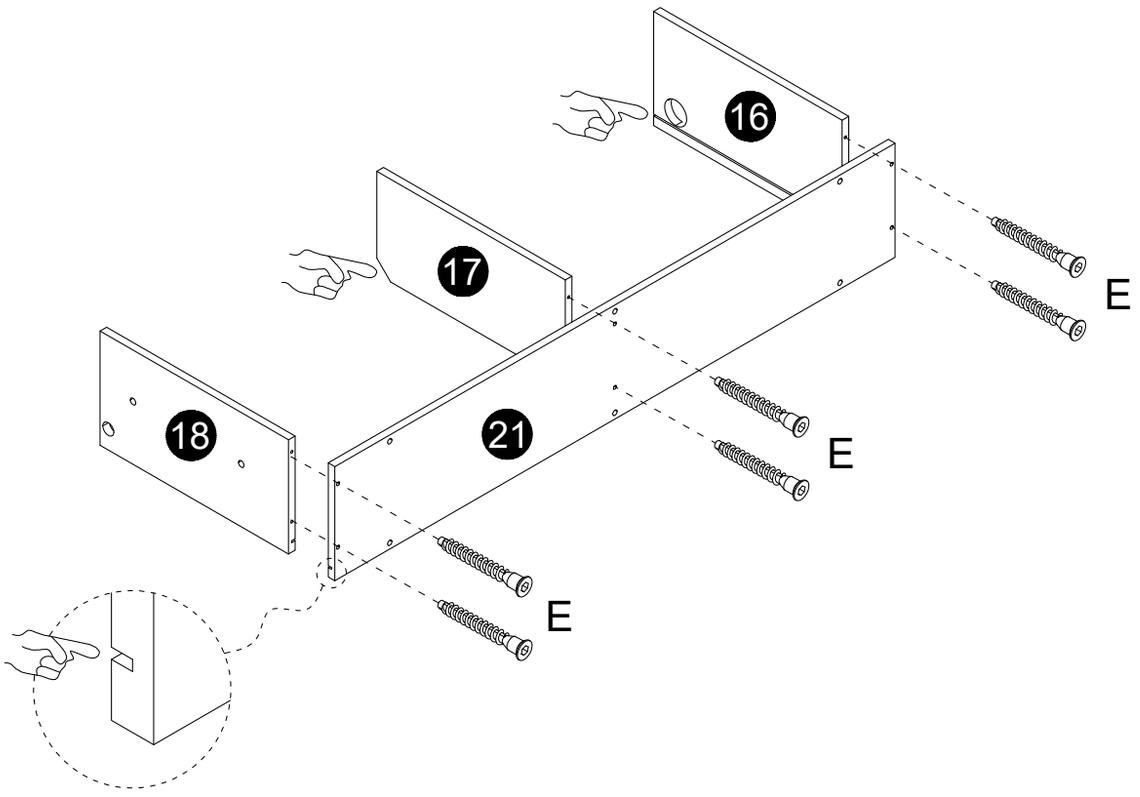

20

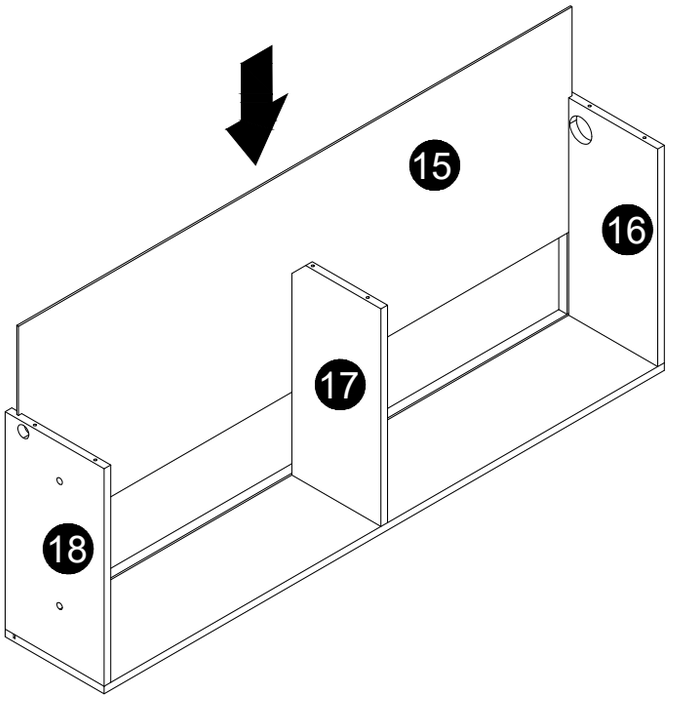

21

E	5*40mm	6pcs
g	M4	1pc

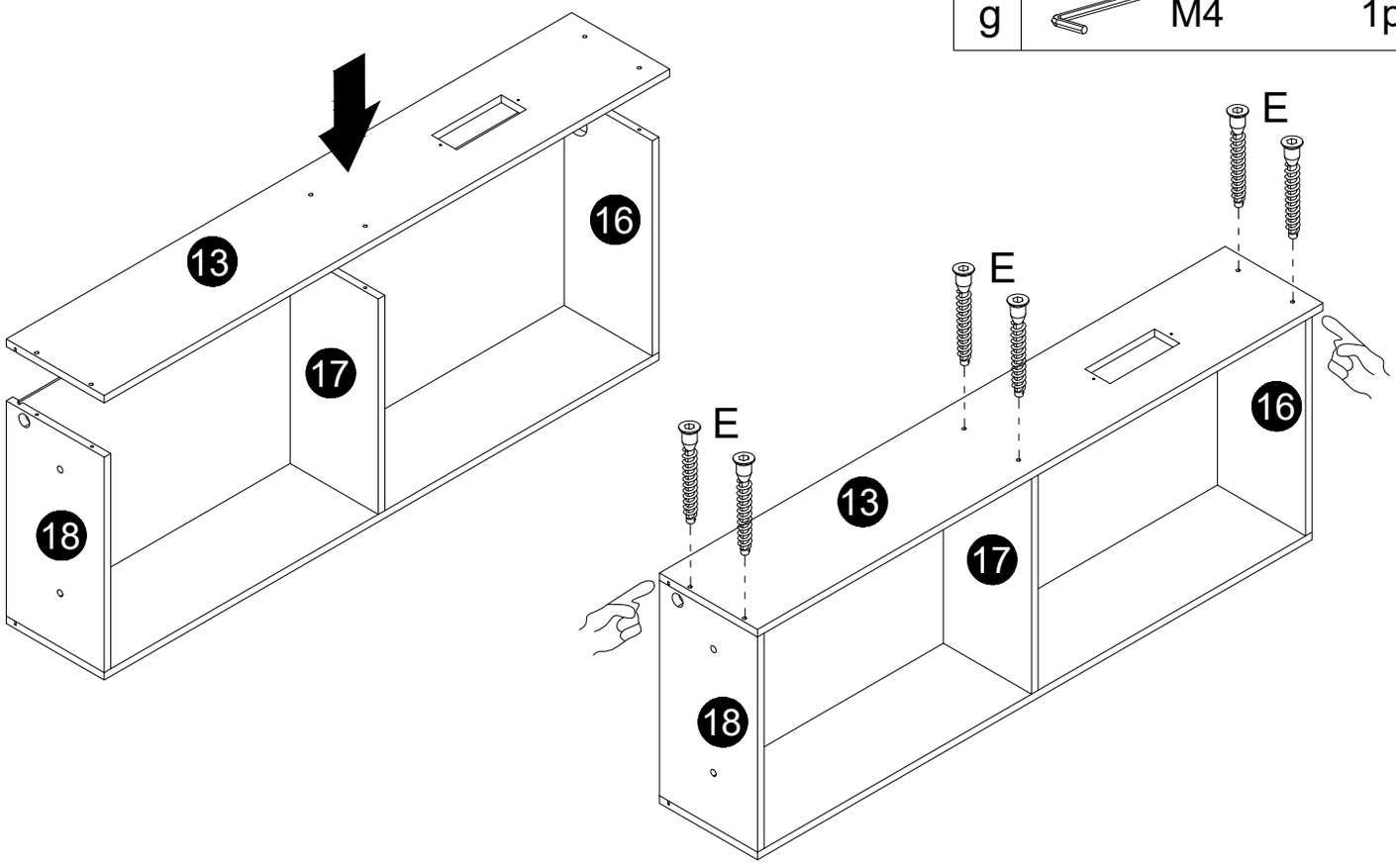

22

M	6*15mm	2pcs
N	6*15mm	2pcs
g	M4	1pc
e	M6	1pc

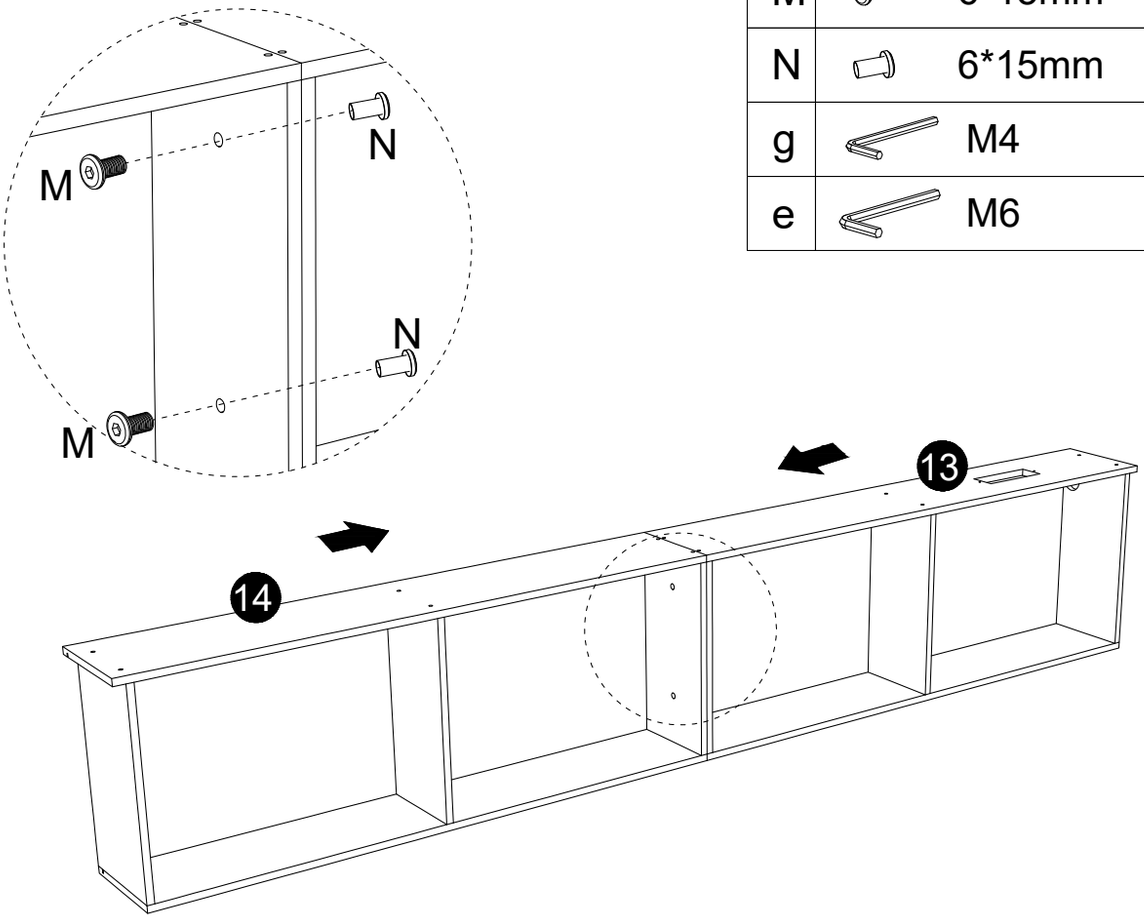

23

e	M6	1pc	L	6*60mm	2pcs
b	M8&M6	1pc	K	6*40mm	4pcs
			T	M6	2pcs

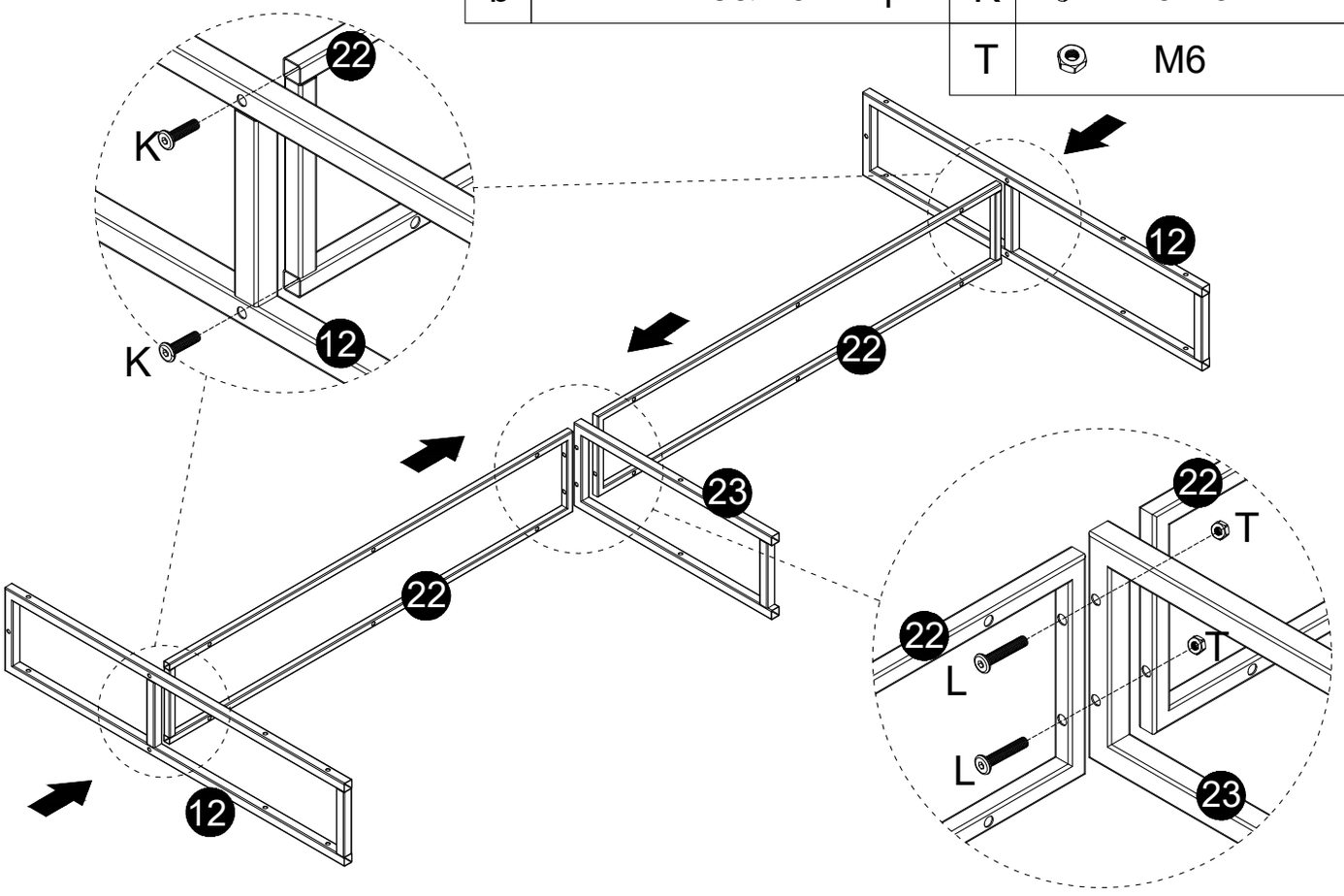

24

e	M6	1pc	B	6*25mm	12pcs

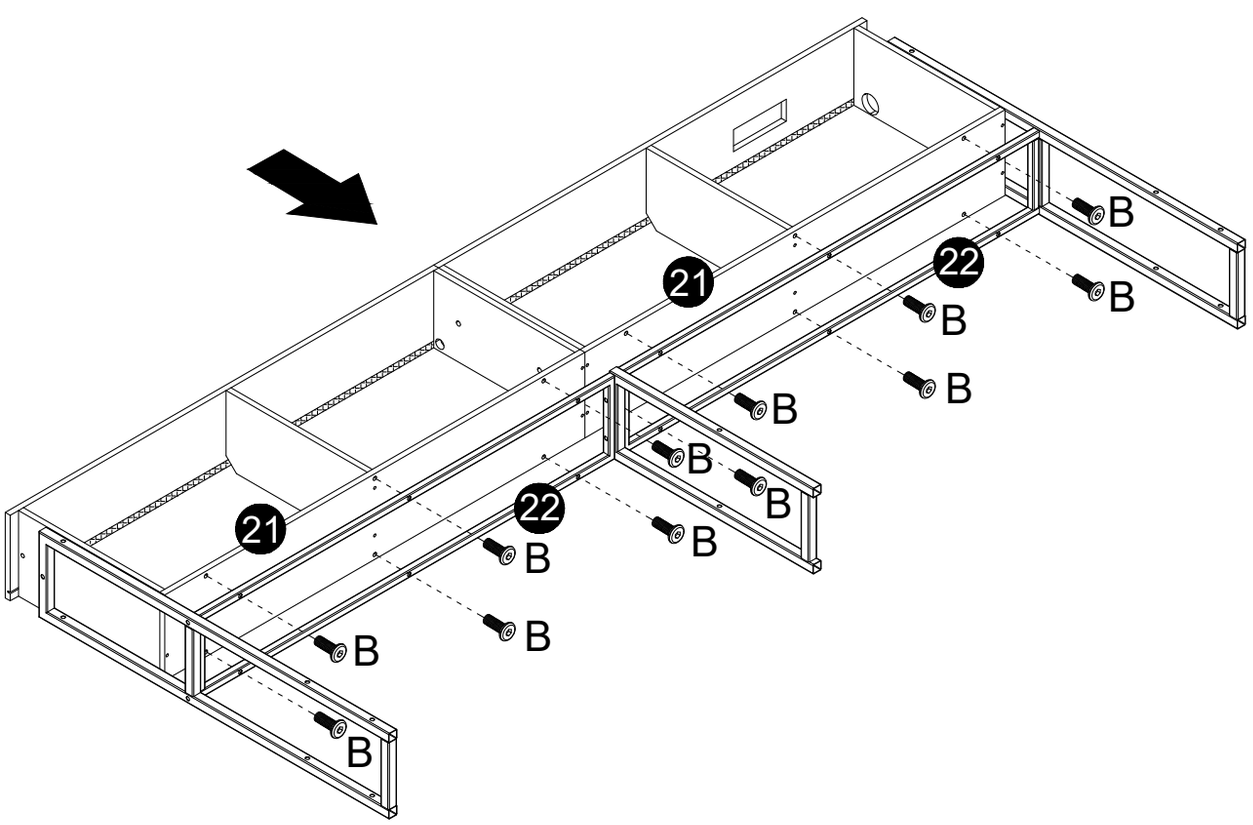

25

e	M6	1pc	A	6*28mm	2pcs
			Y		1pc

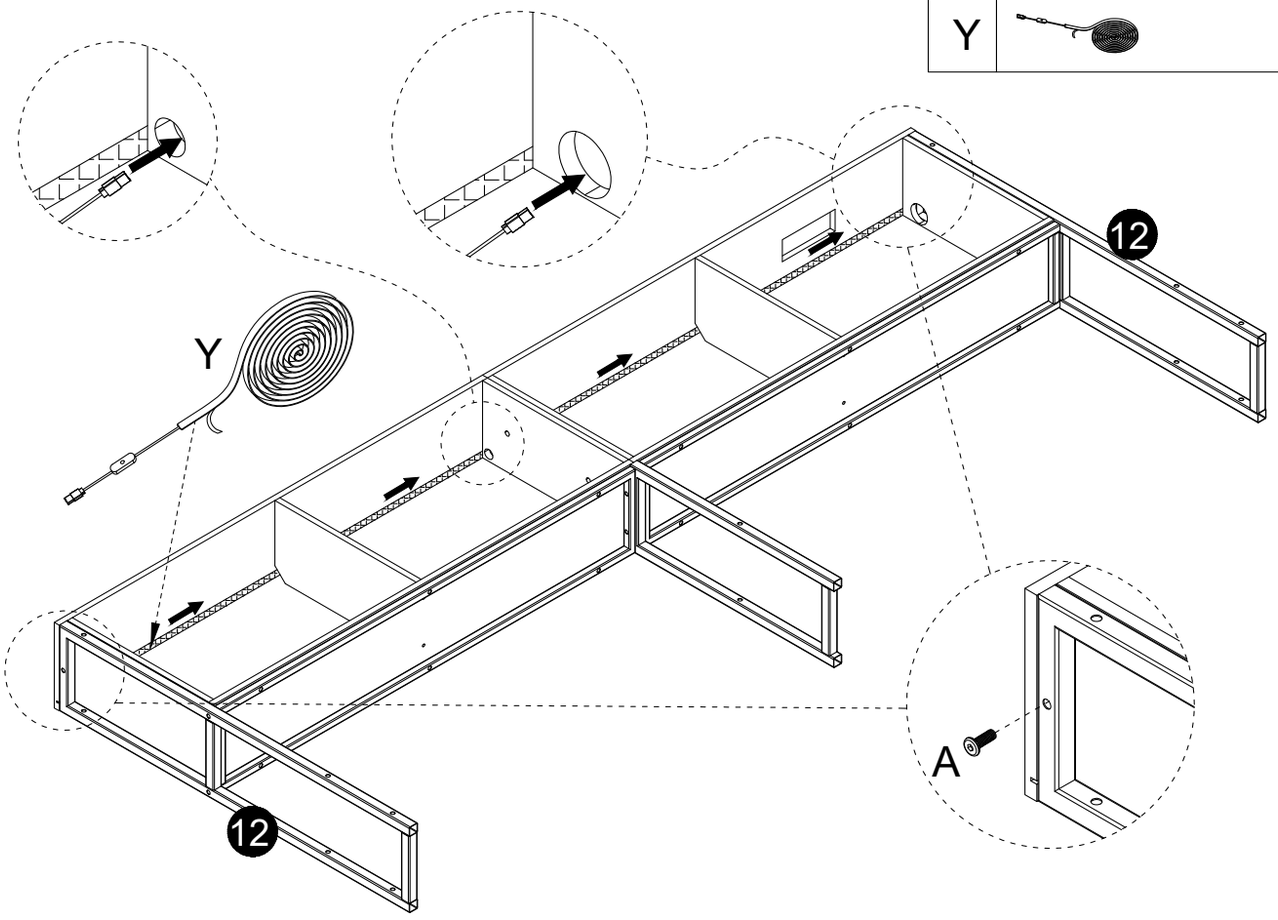

26

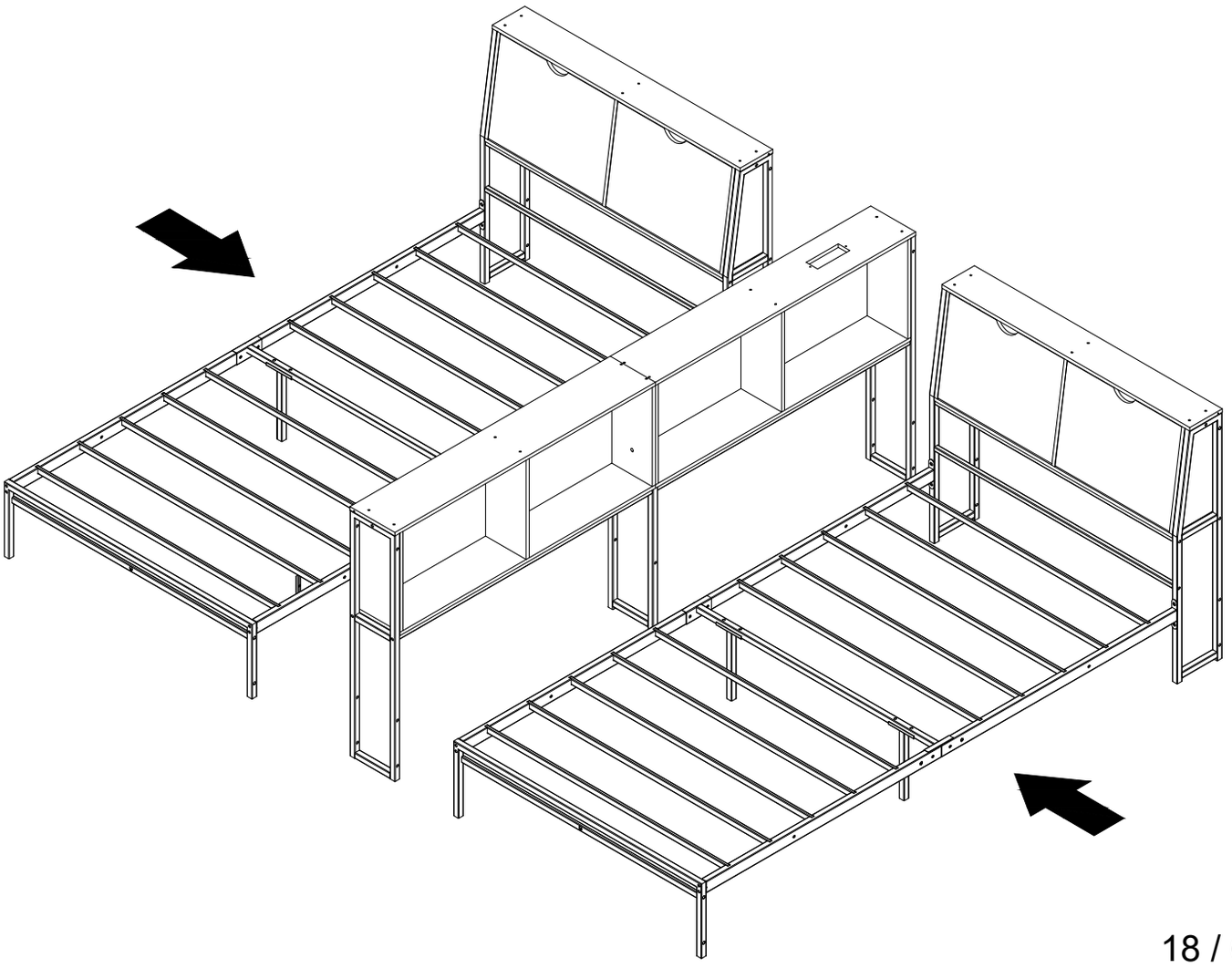

27

A		6*28mm	6pcs
e		M6	1pc

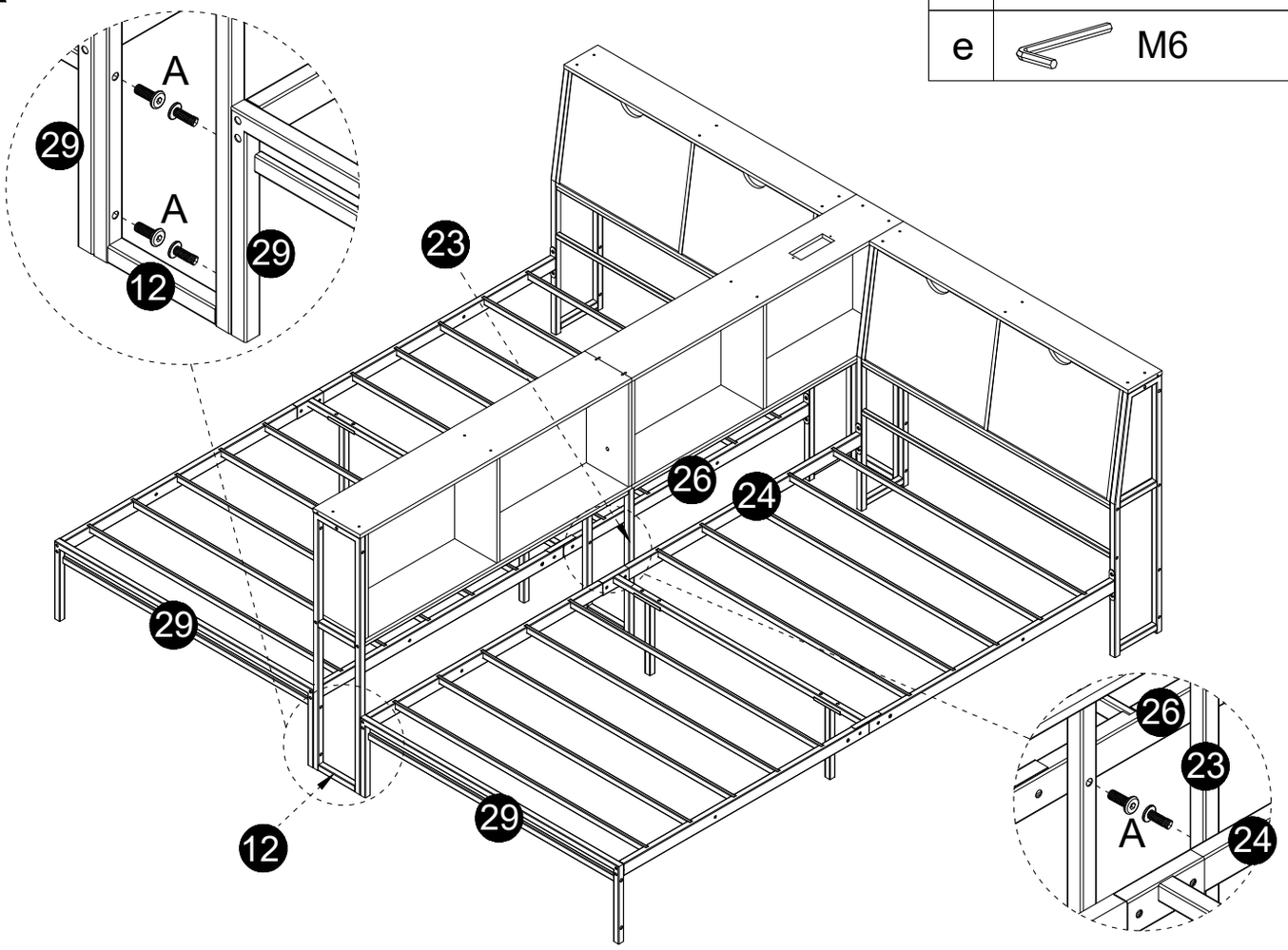

28

e		M6	1pc	C		6*50mm	4pcs
b		M8&M6	1pc	T		M6	4pcs
				A		6*28mm	2pcs

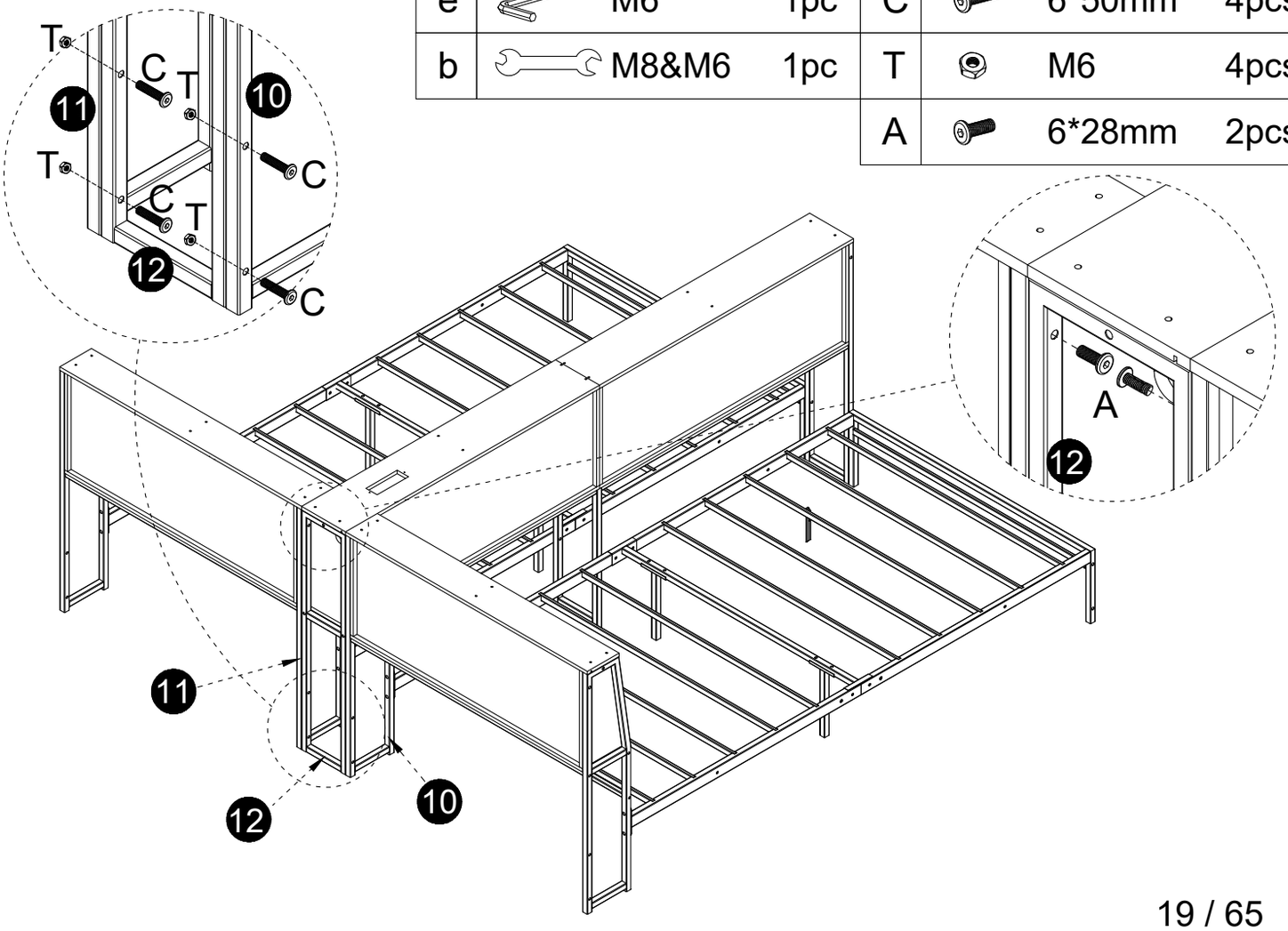

29

G	4*10mm	2pcs
Z		1pc
f		1pc

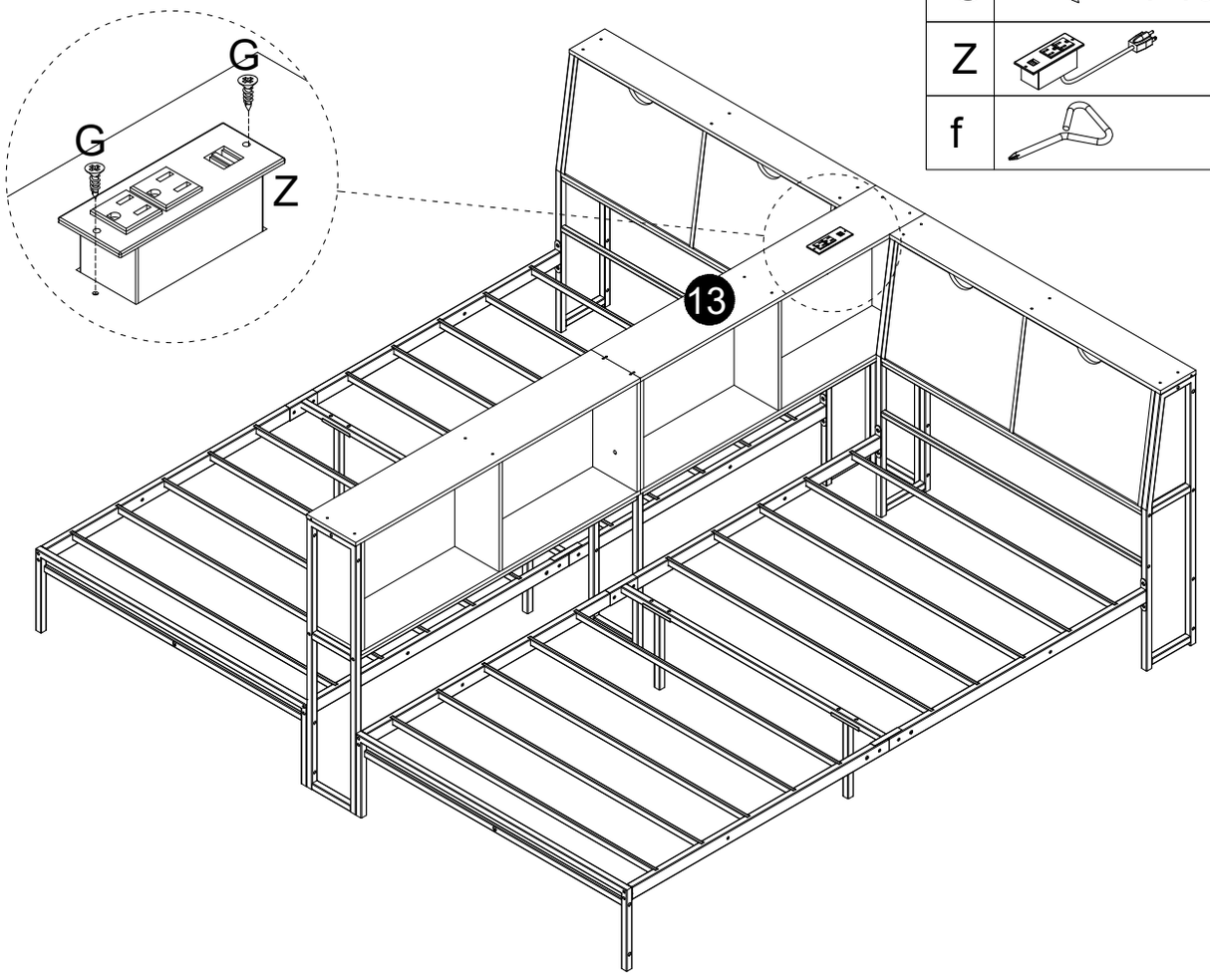

30

F	4*28mm	16pcs
Q	M4	16pcs
f		1pc
c	M4	1pc

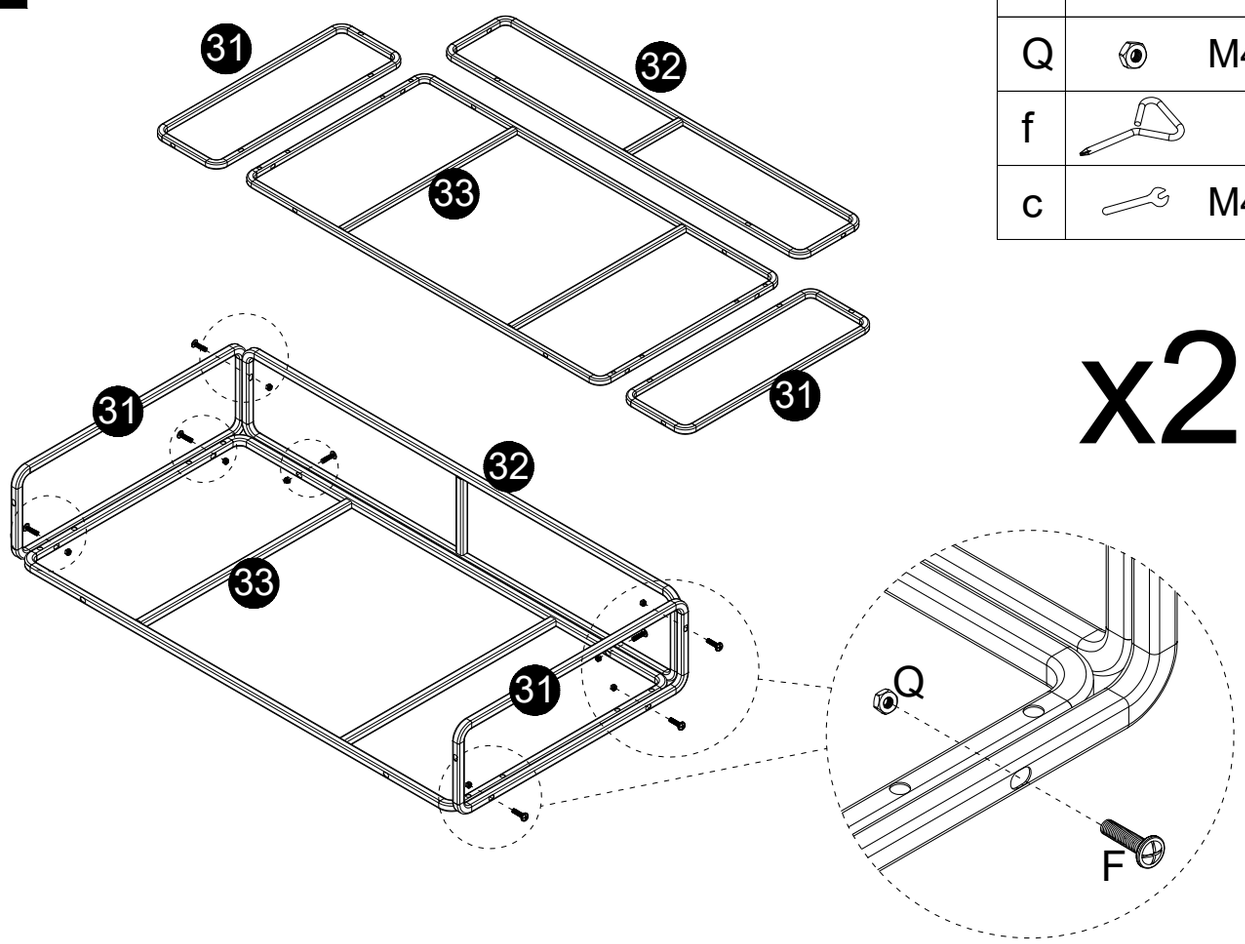

x2

31

F		4*28mm	16pcs
Q		M4	16pcs
U		1.0	8pcs
f	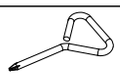		1pc
c		M4	1pc

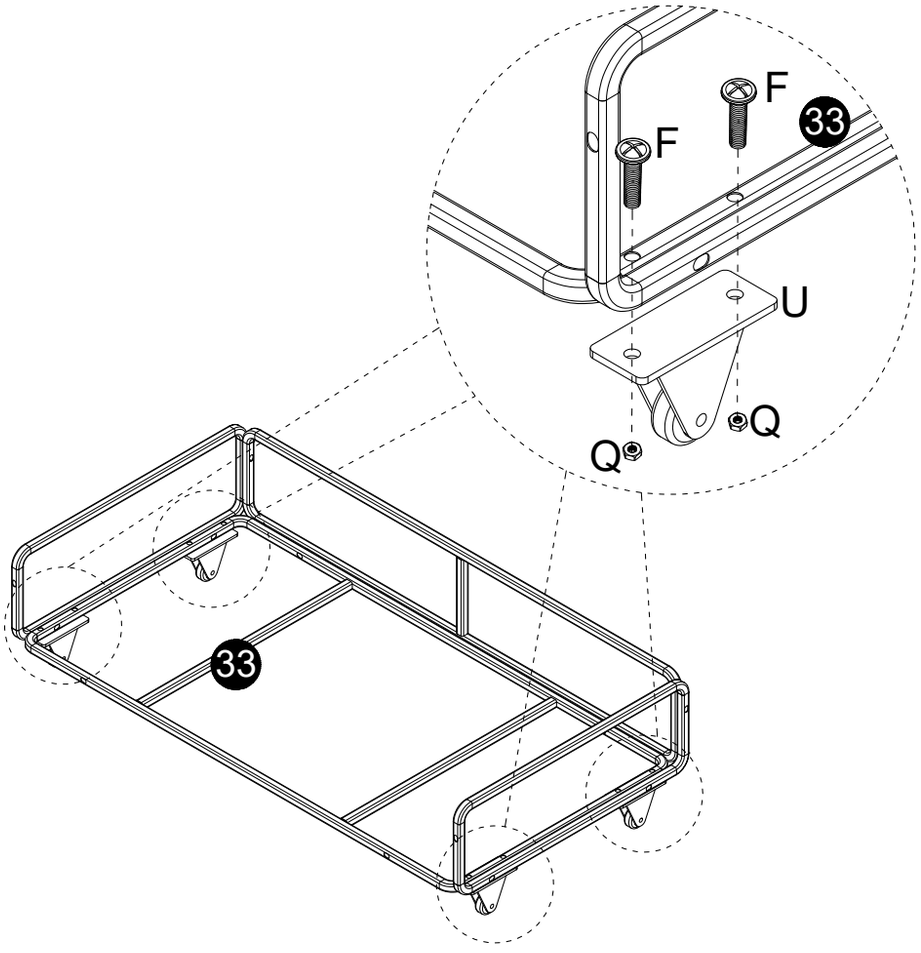

x2

32

I		4*18mm	8pcs
f	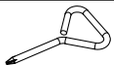		1pc

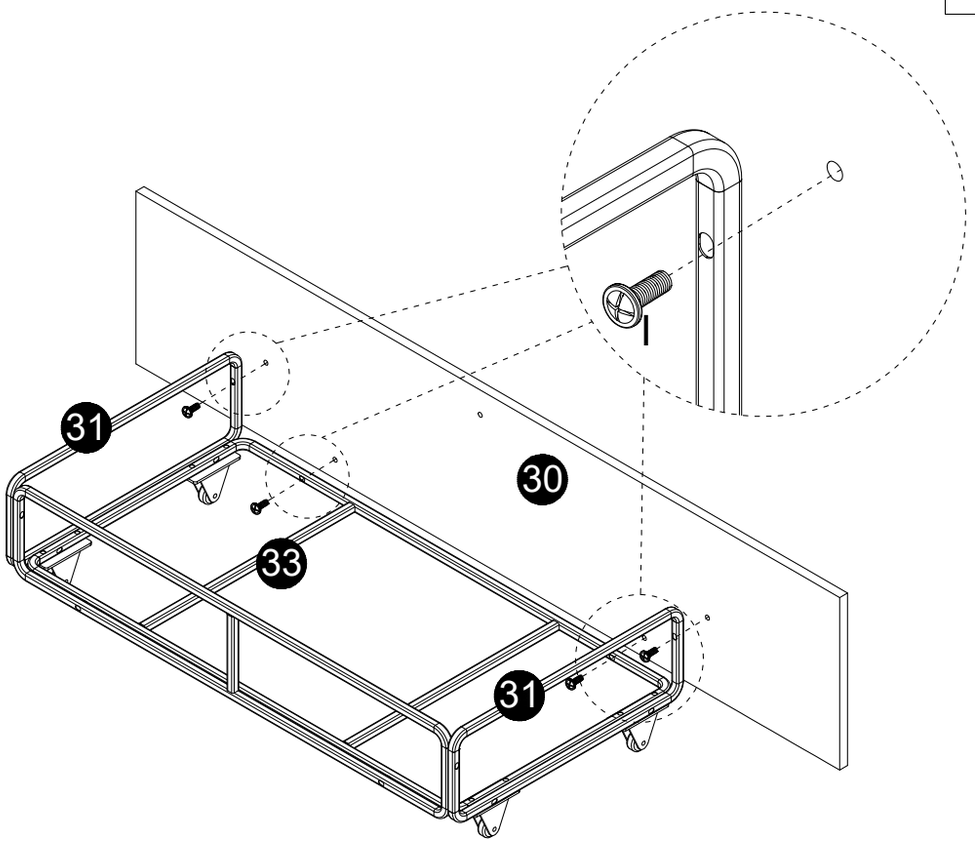

x2

33

O		4*11mm	2pcs
g	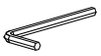	M4	1pc

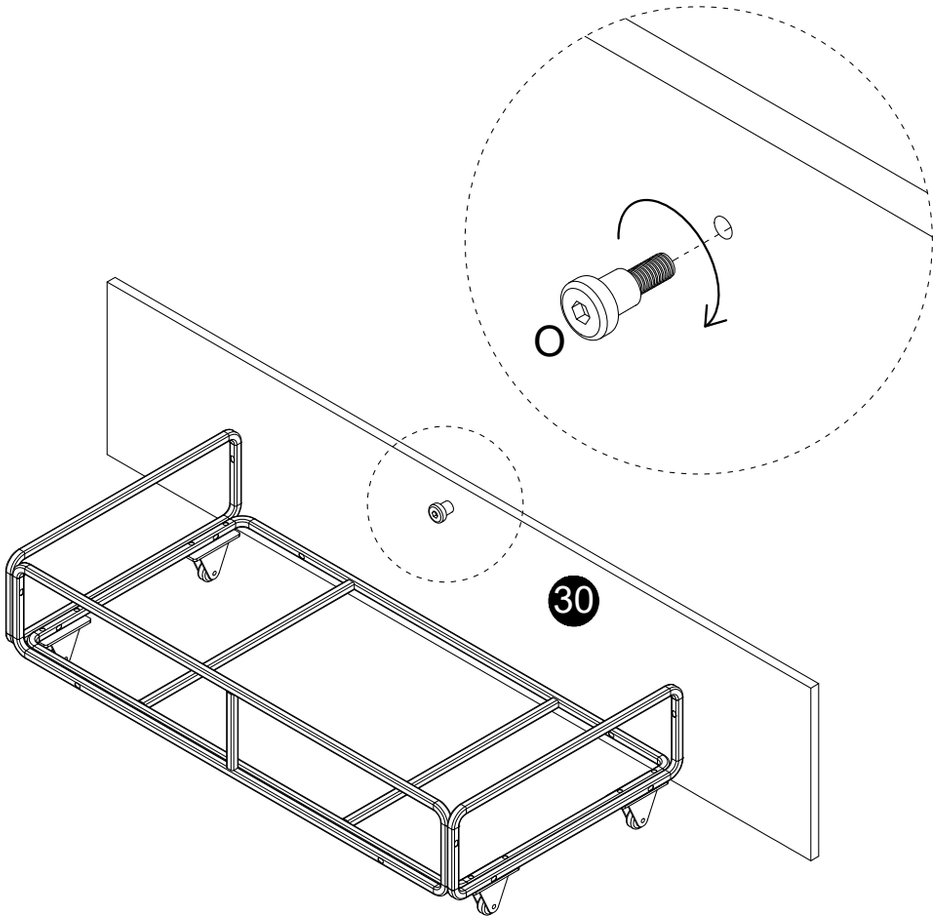

x2

34

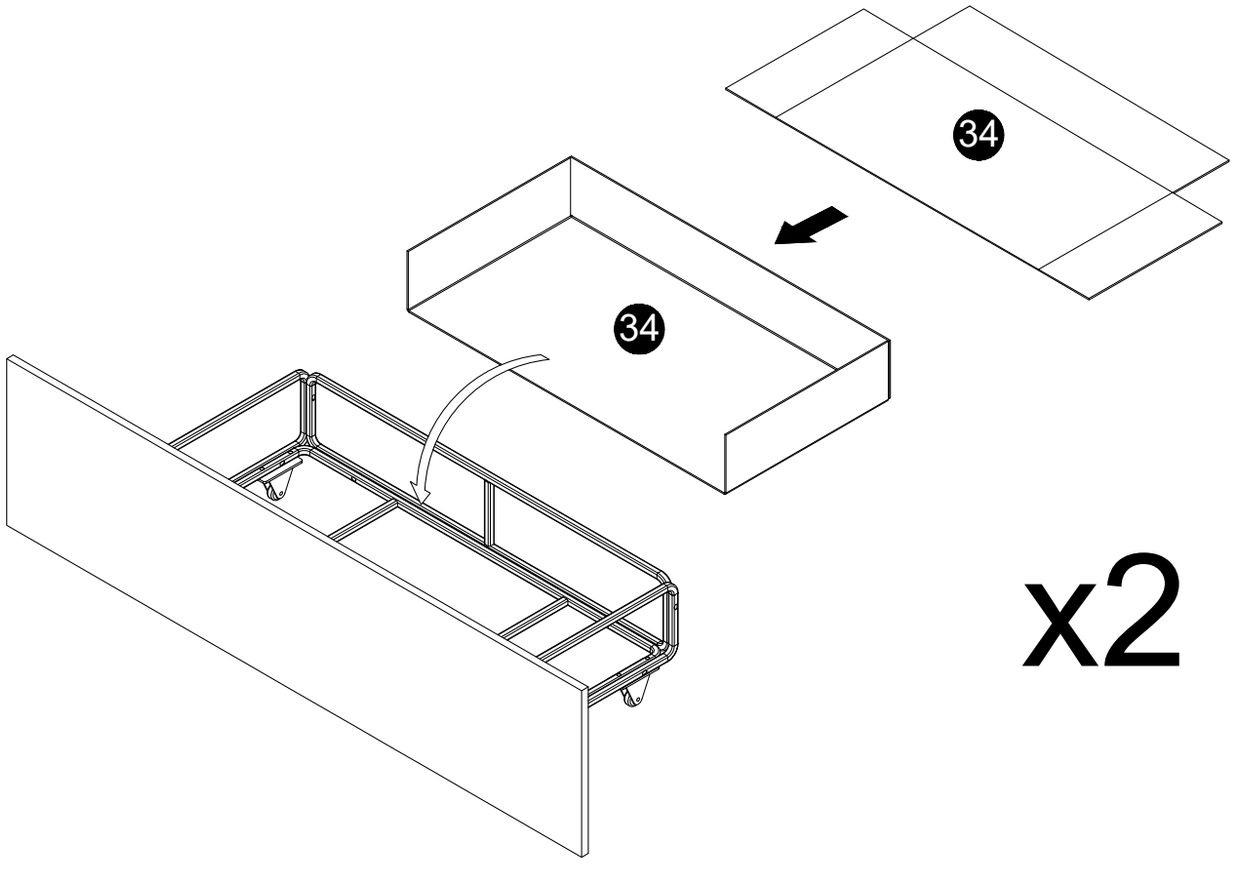

x2

35

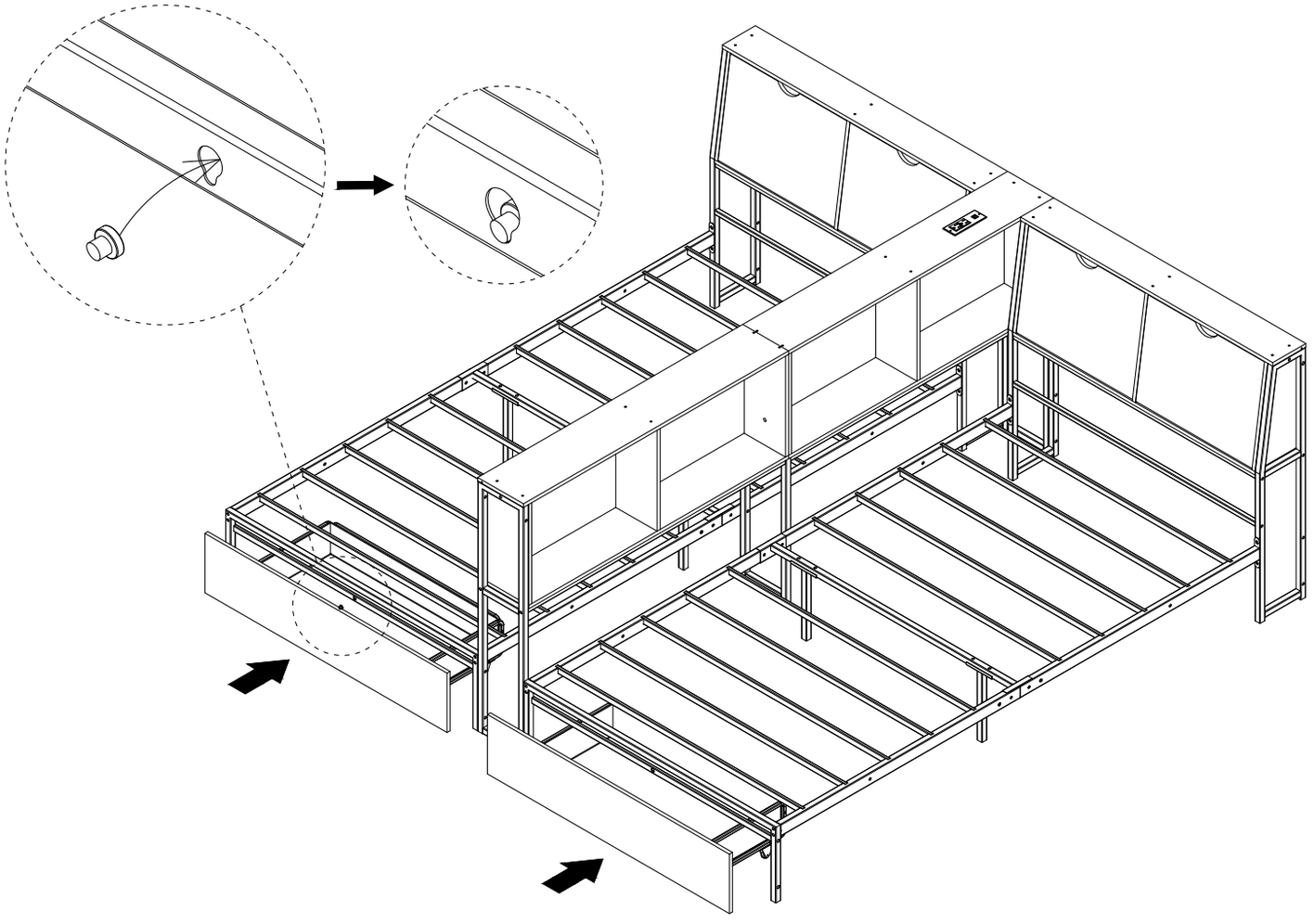

36

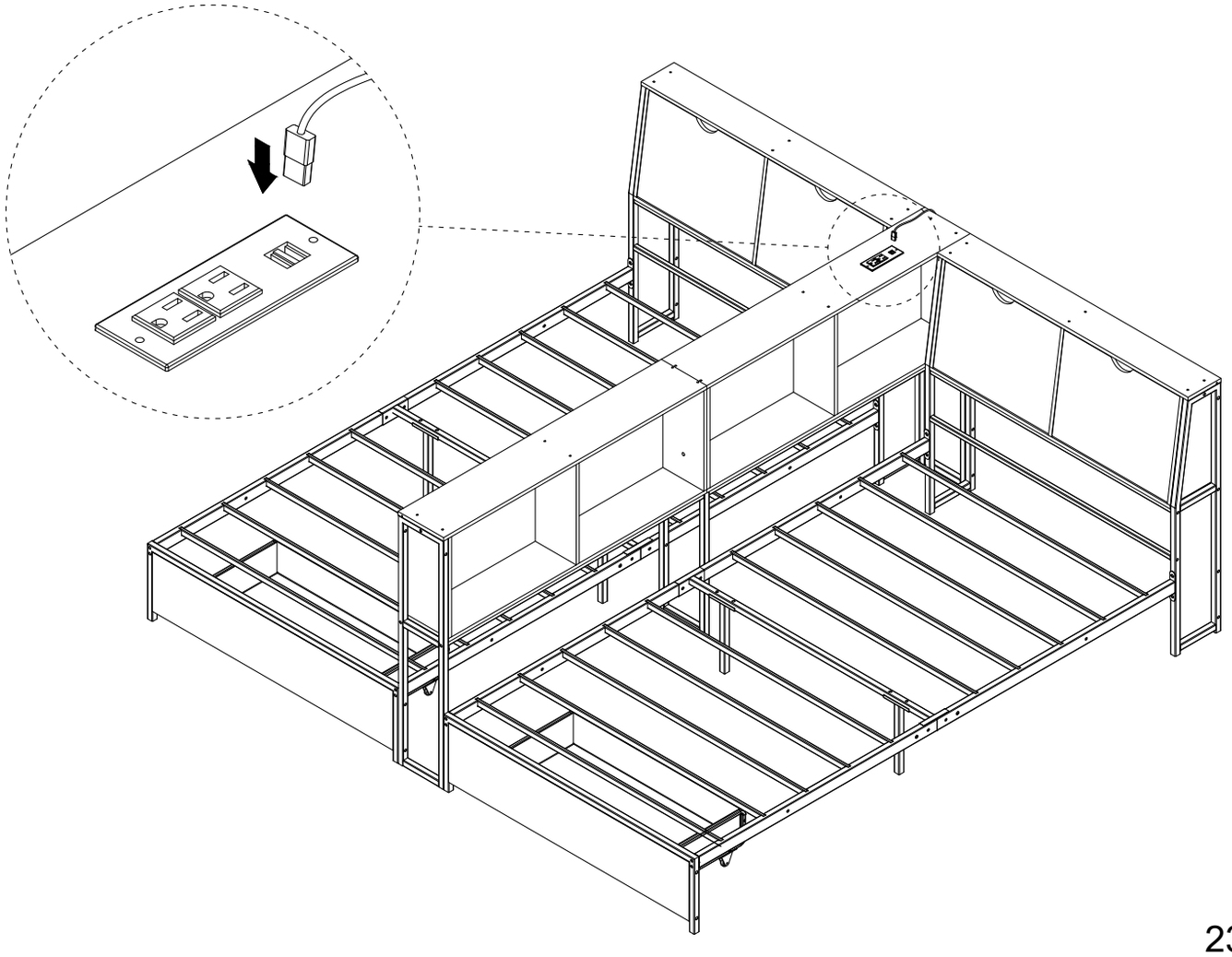

The second type:
One King size bed with side-storage

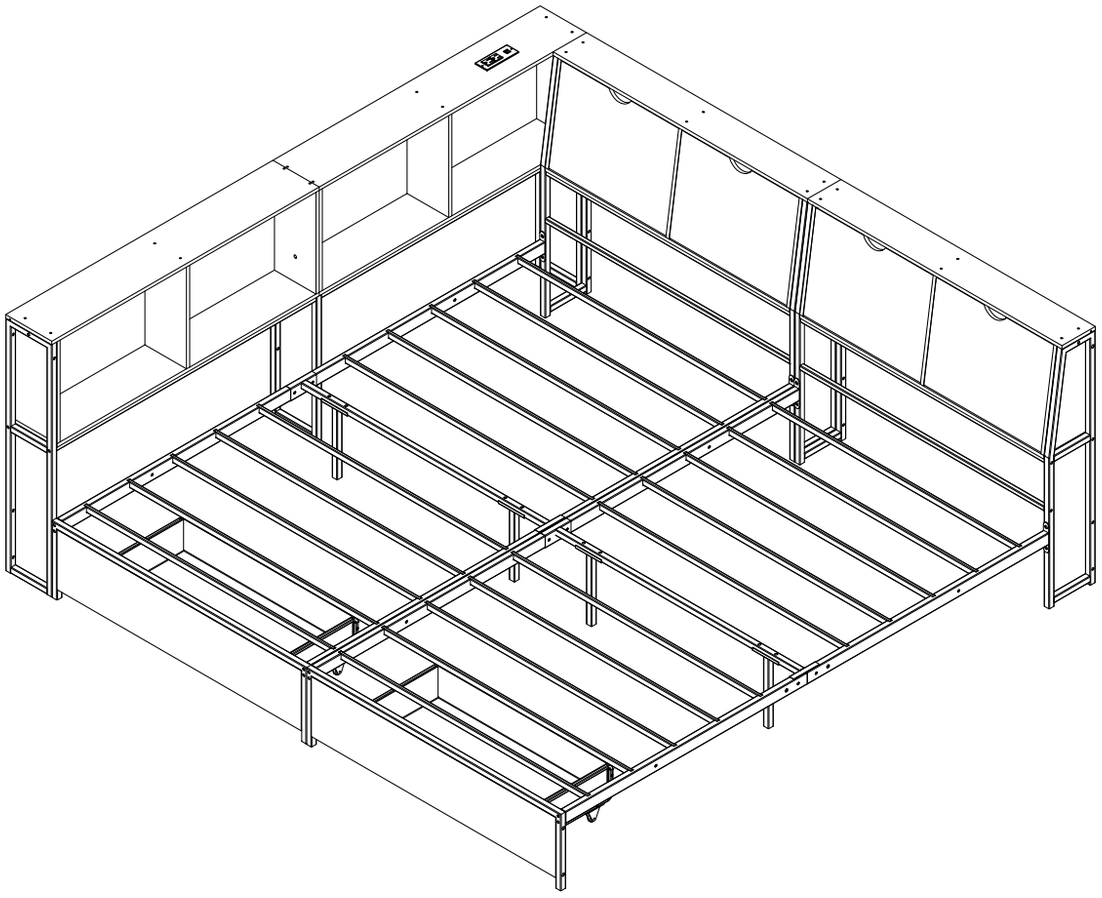

Note:

1.Should be assembled on flat ground to keep balance.

2.Before completing the installation, do not tighten the screws.

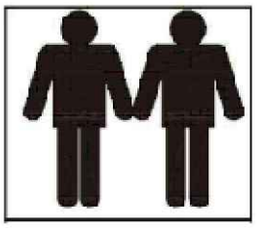

It needs at least two people to install.



Before starting the assembly, you must read the whole manual and follow the instructions

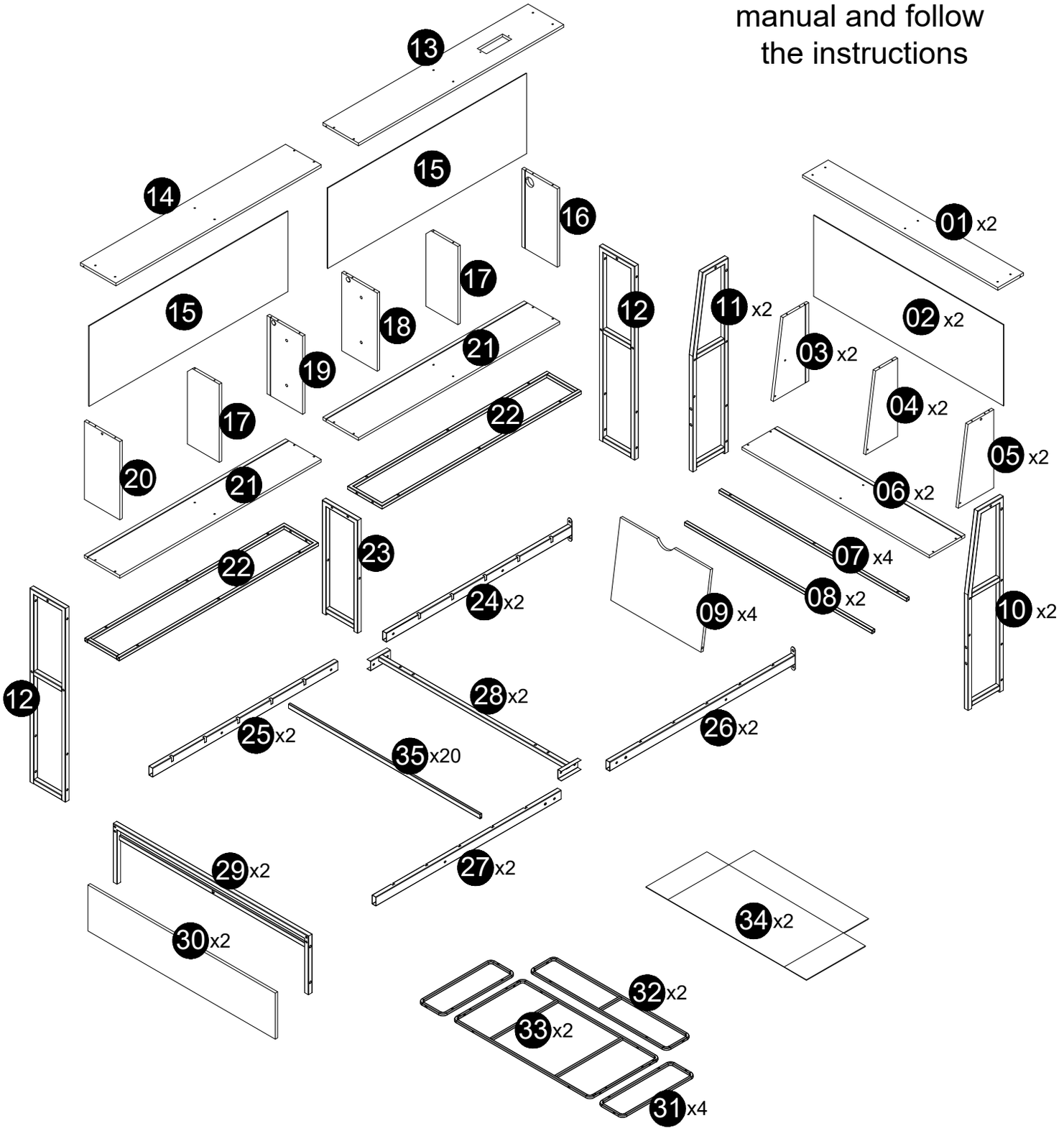

1

G	4*10mm	8pcs
W		4pcs
f		1pc

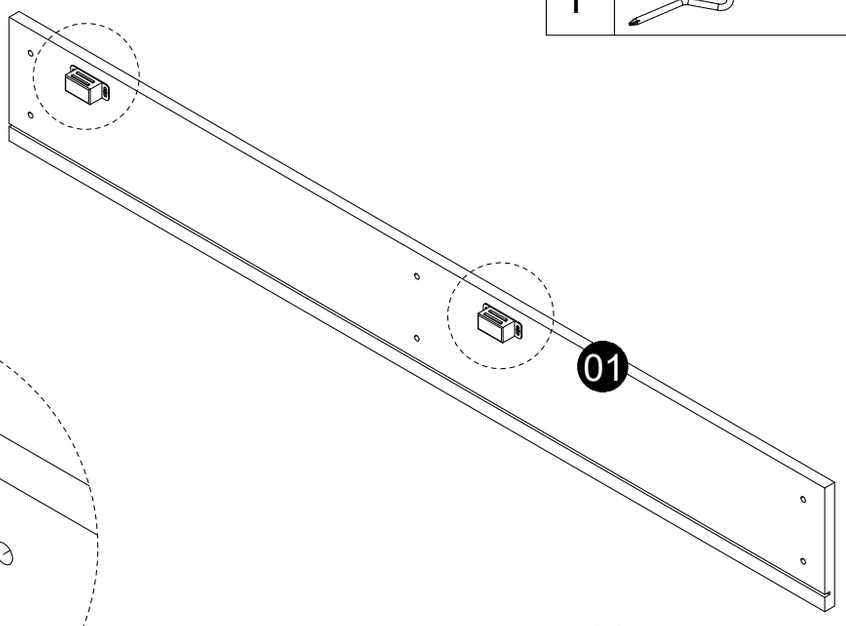

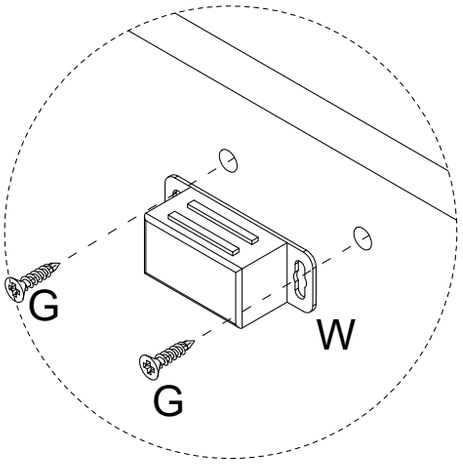

x2

2

G	4*10mm	8pcs
W		4pcs
f		1pc

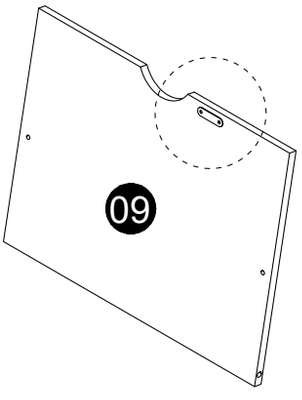

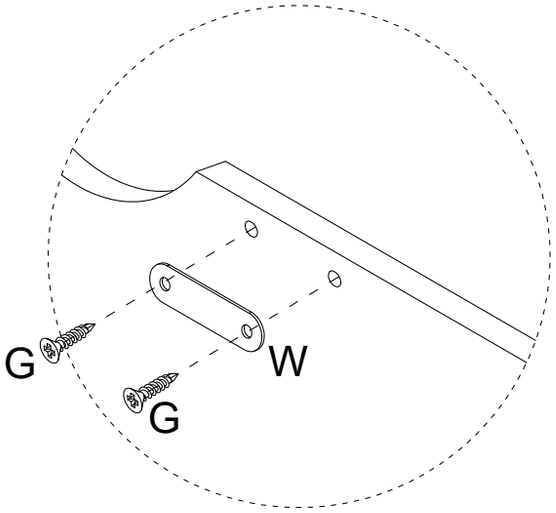

x4

3

E	5*40mm	12pcs
g	M4	1pc

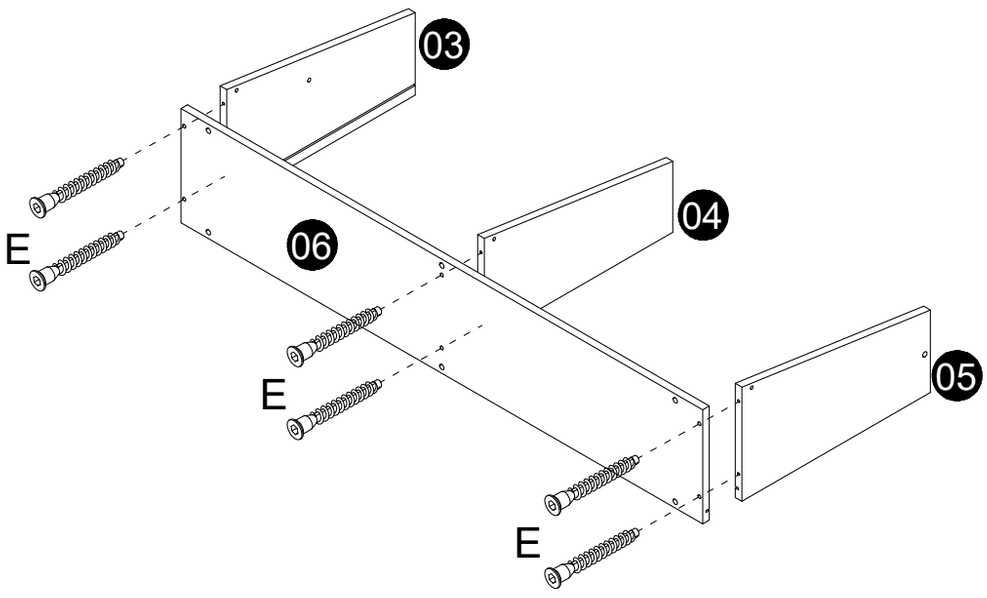

x2

4

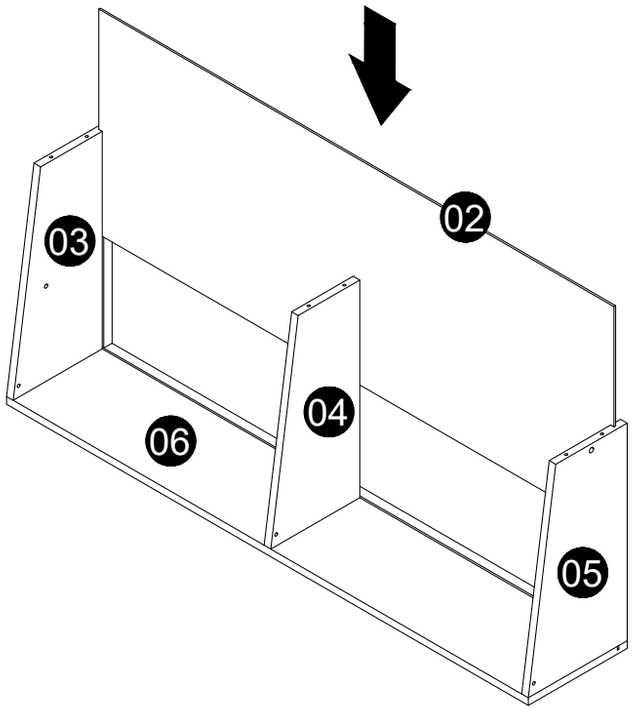

x2

5

E	5*40mm	12pcs	
g	M4	1pc	

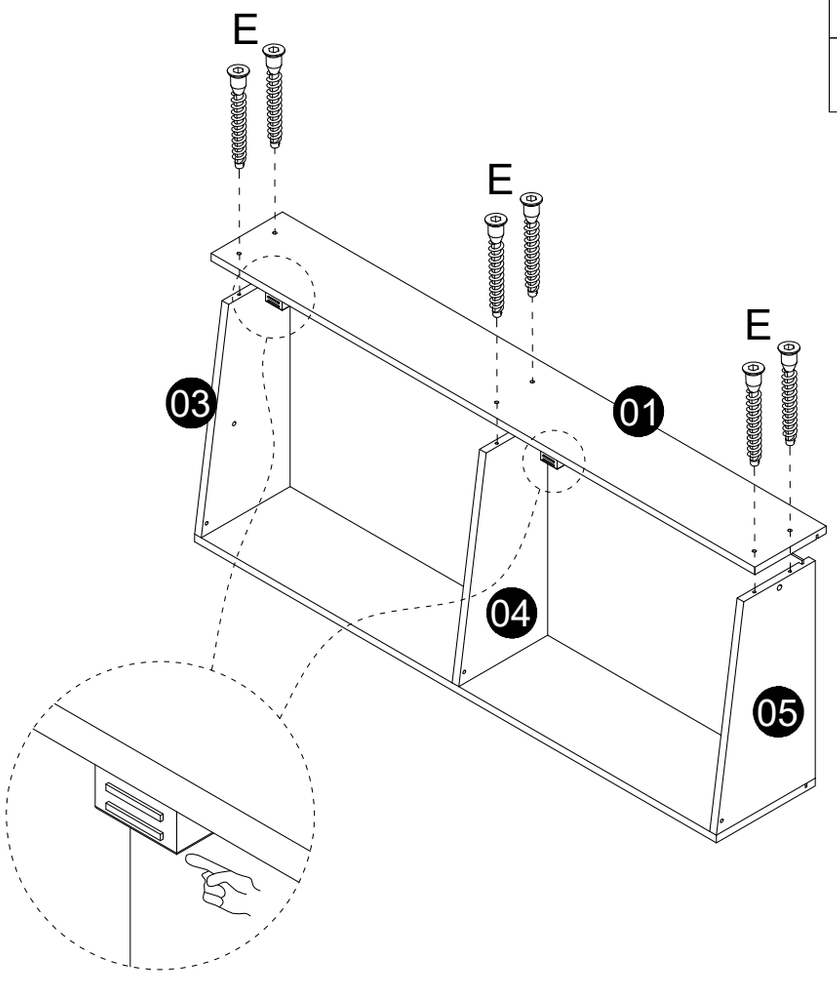

x2

6

e	M6	1pc	B	6*25mm	12pcs

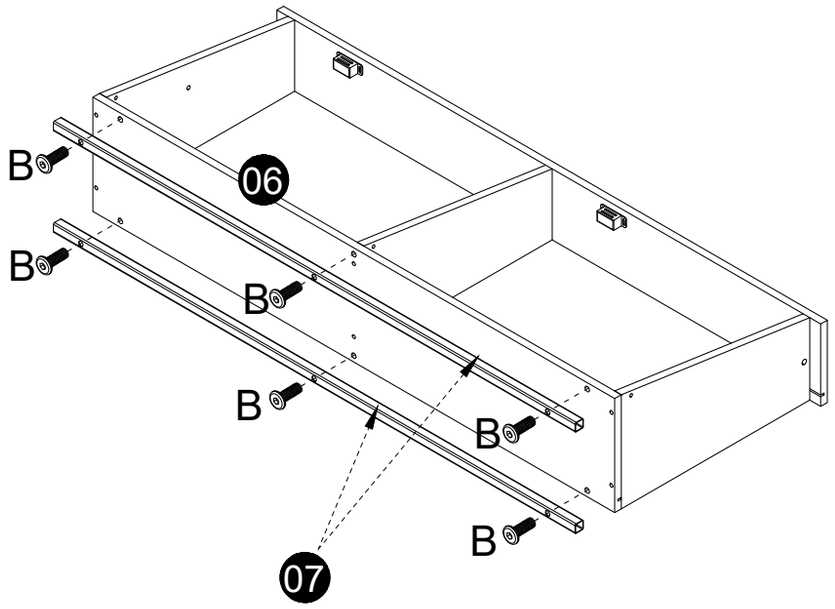

x2

7

A	6*28mm	4pcs
D	6*40mm	8pcs
e	M6	1pc

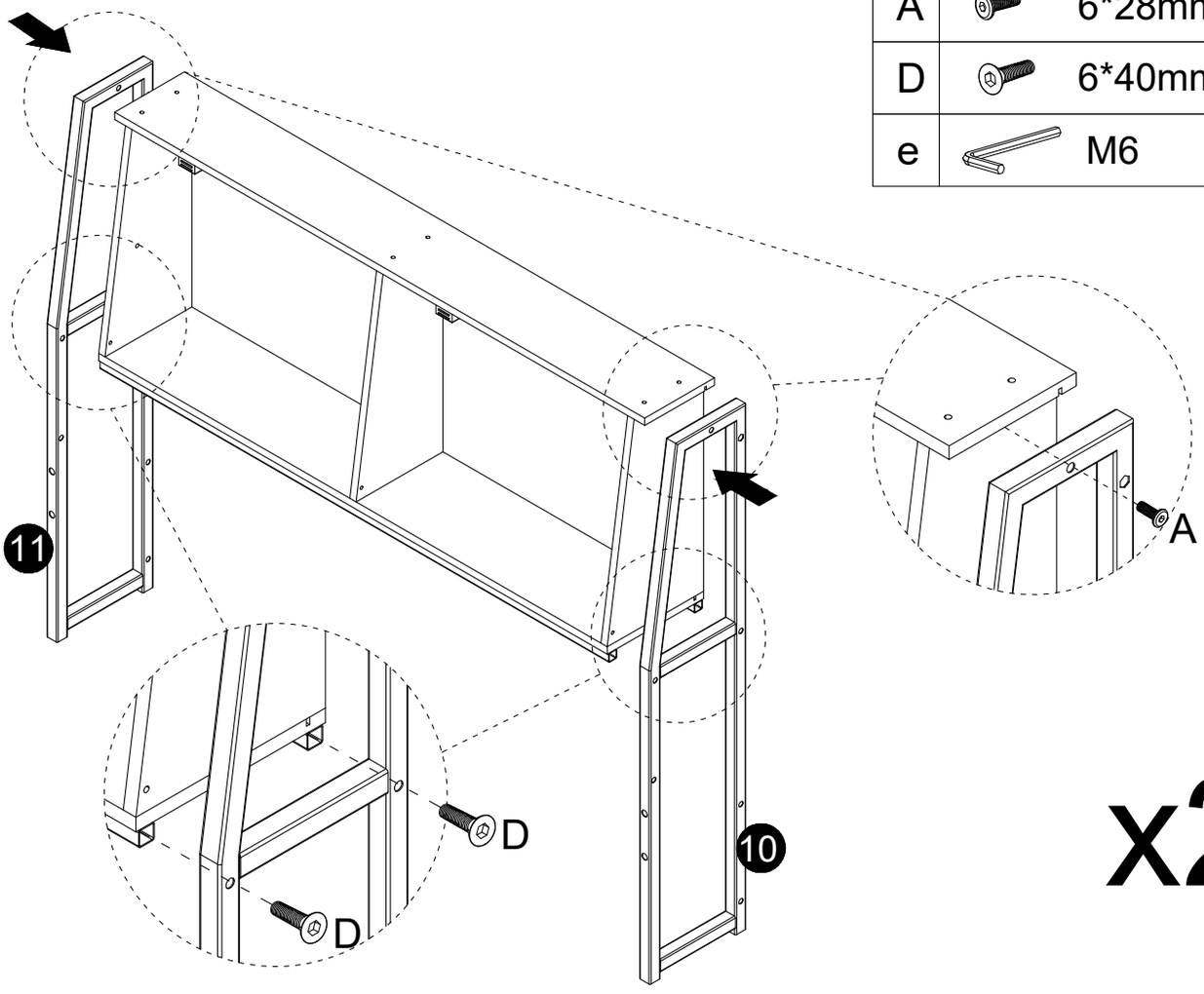

x2

8

D	6*40mm	4pcs
e	M6	1pc

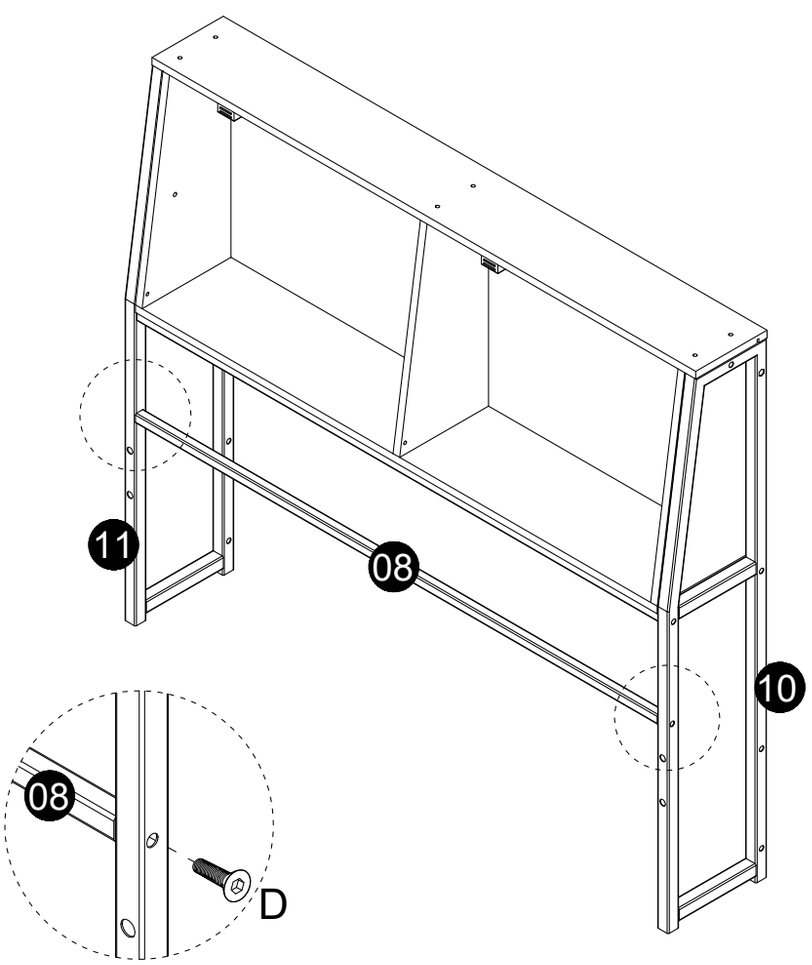

x2

9

V		8pcs

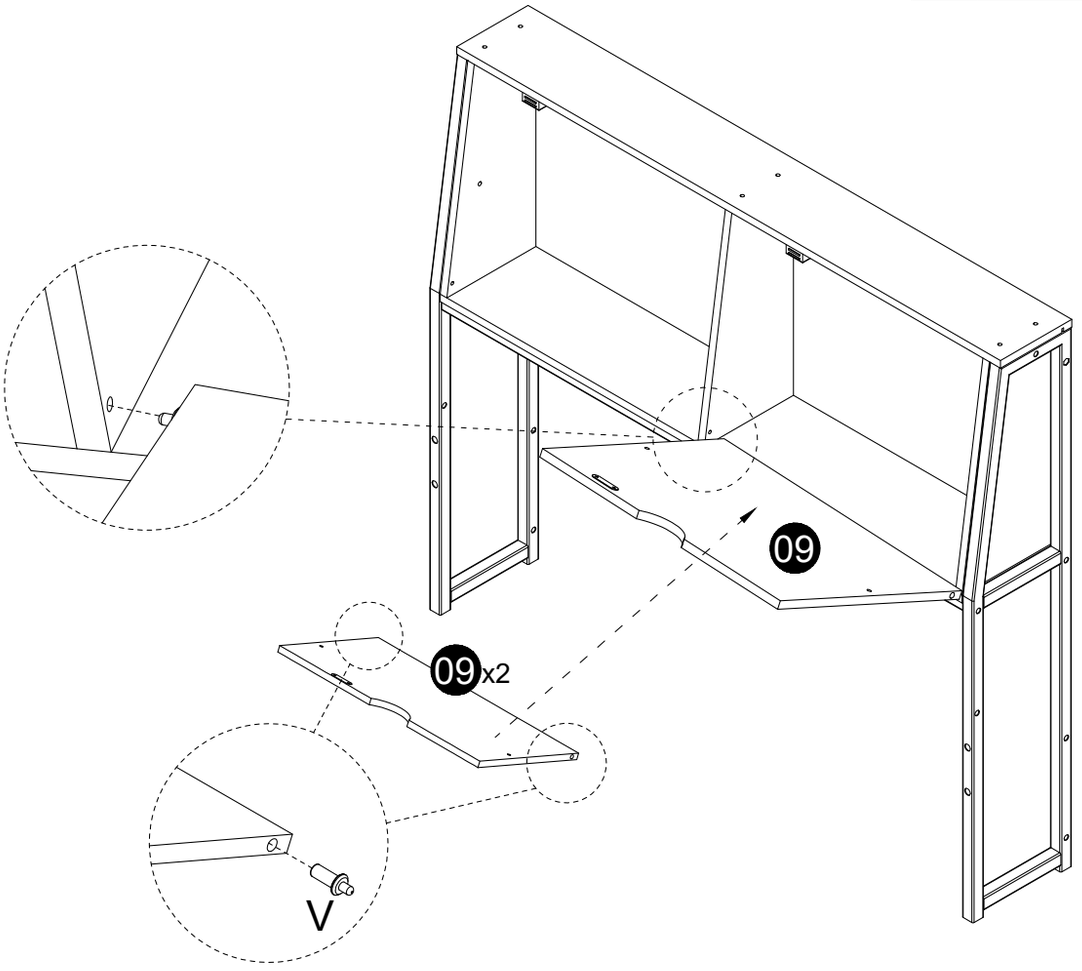

x2

10

H	 4*14mm	8pcs
X		4pcs
f	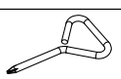	1pc

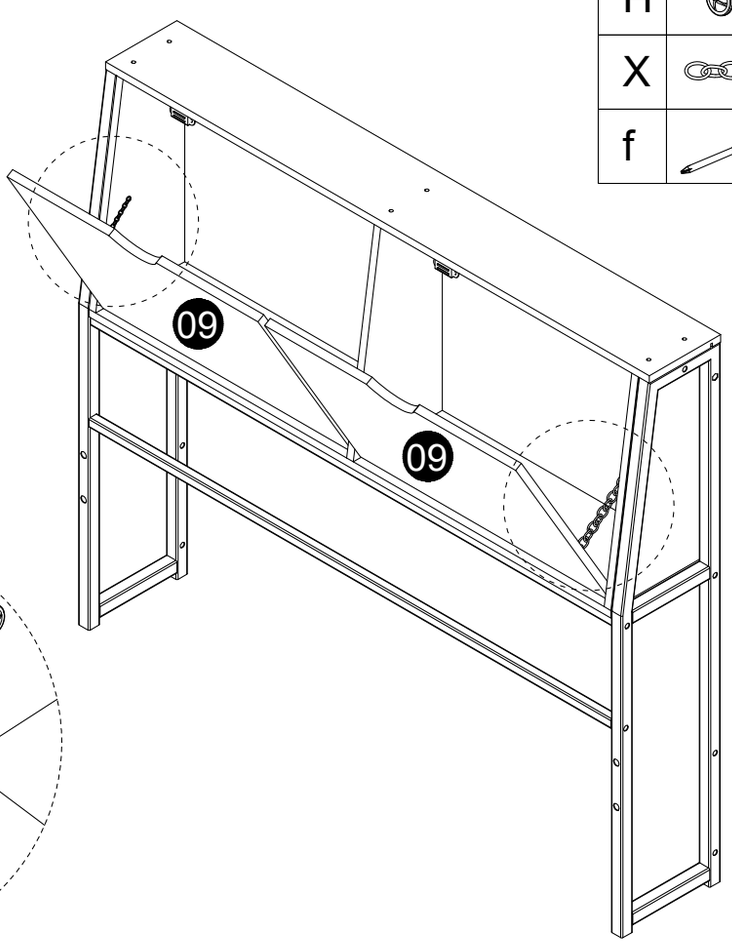

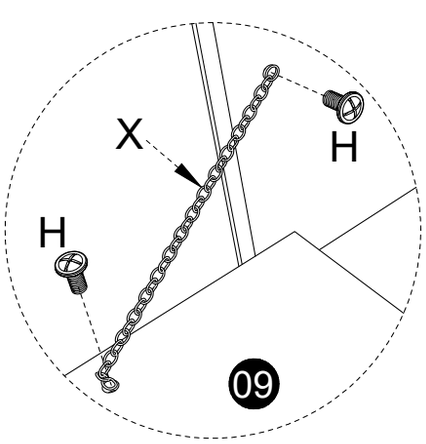

x2

11

B		6*25mm	8pcs
e		M6	1pc

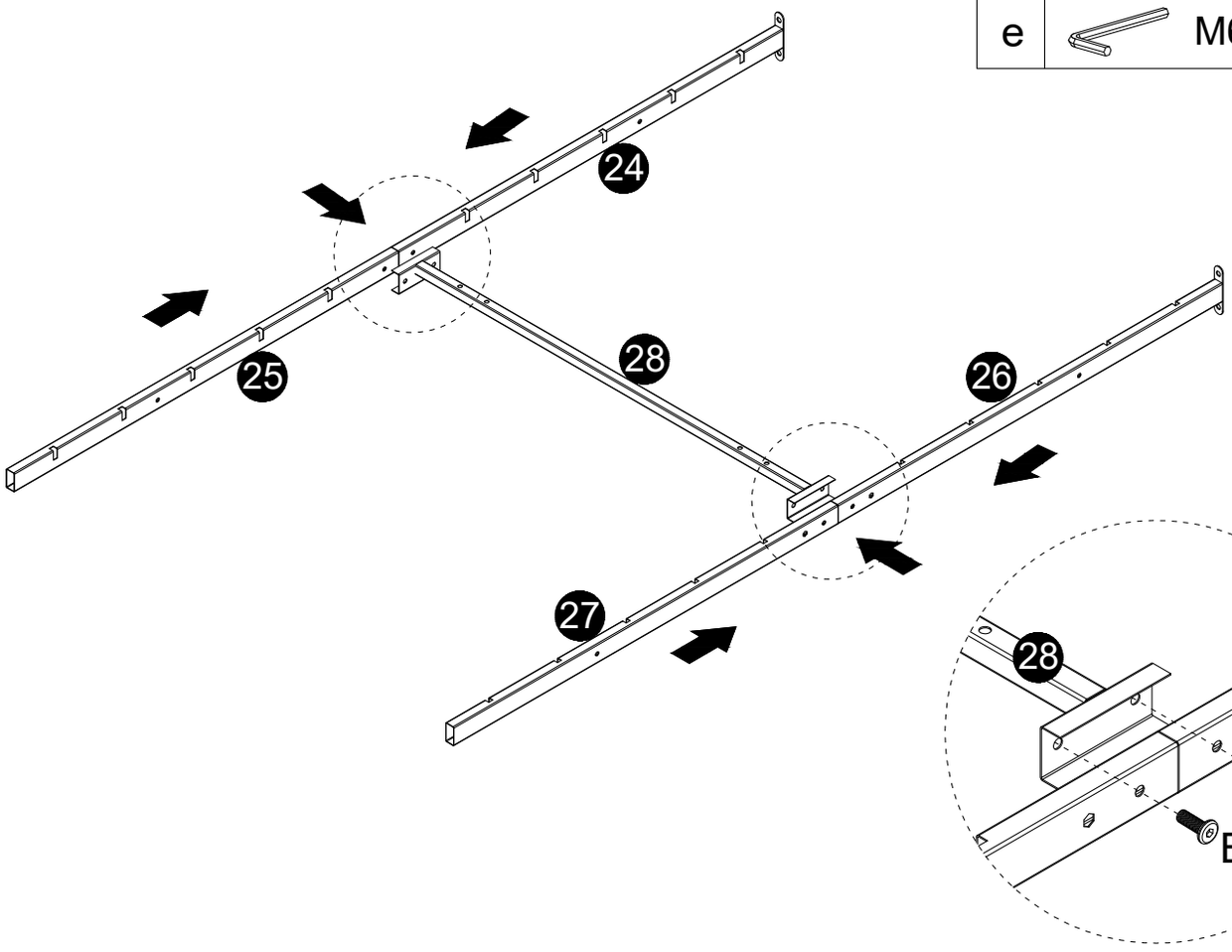

12

b		M8&M6	1pc	A		6*28mm	8pcs
e		M6	1pc	T		M6	8pcs
				P		23.5cm	4pcs

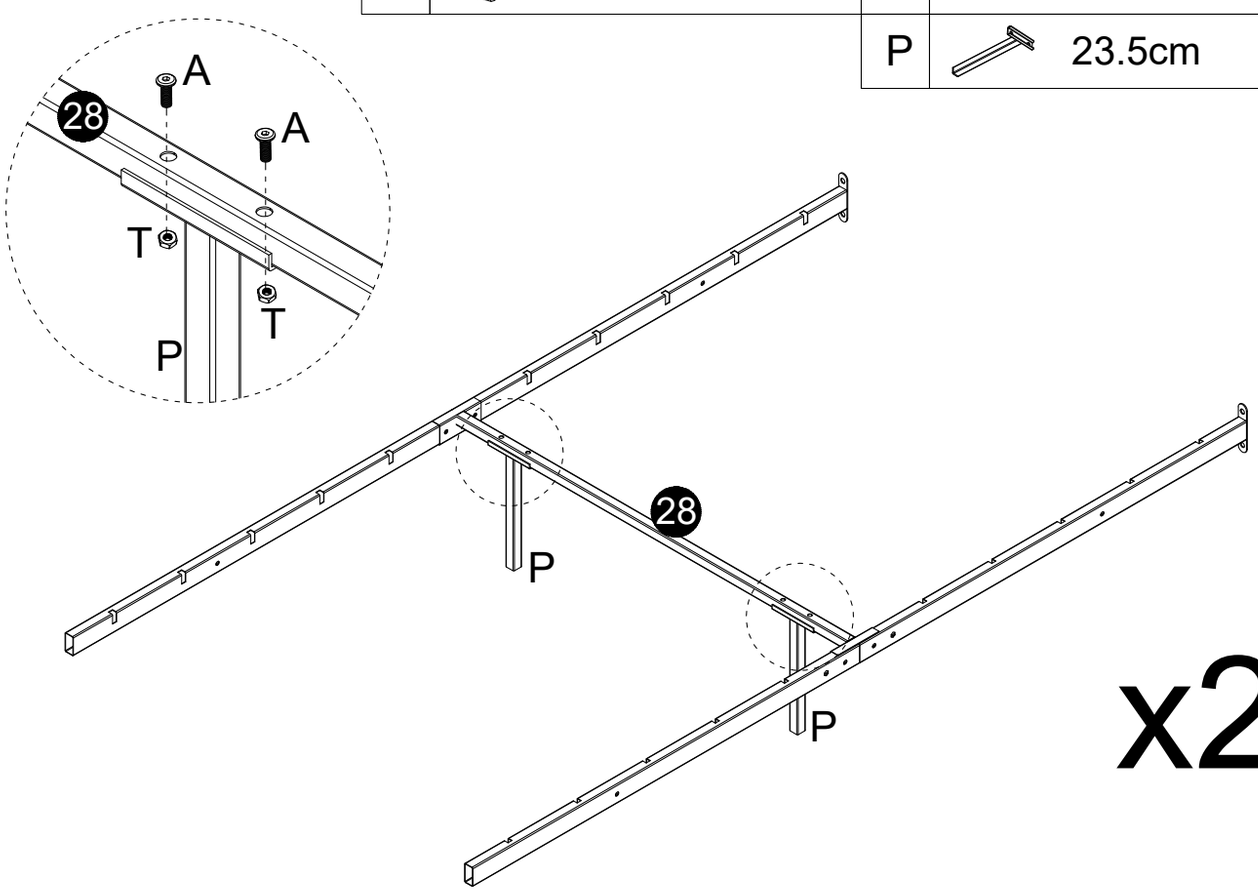

13

K	6*40mm	8pcs
e	M6	1pc

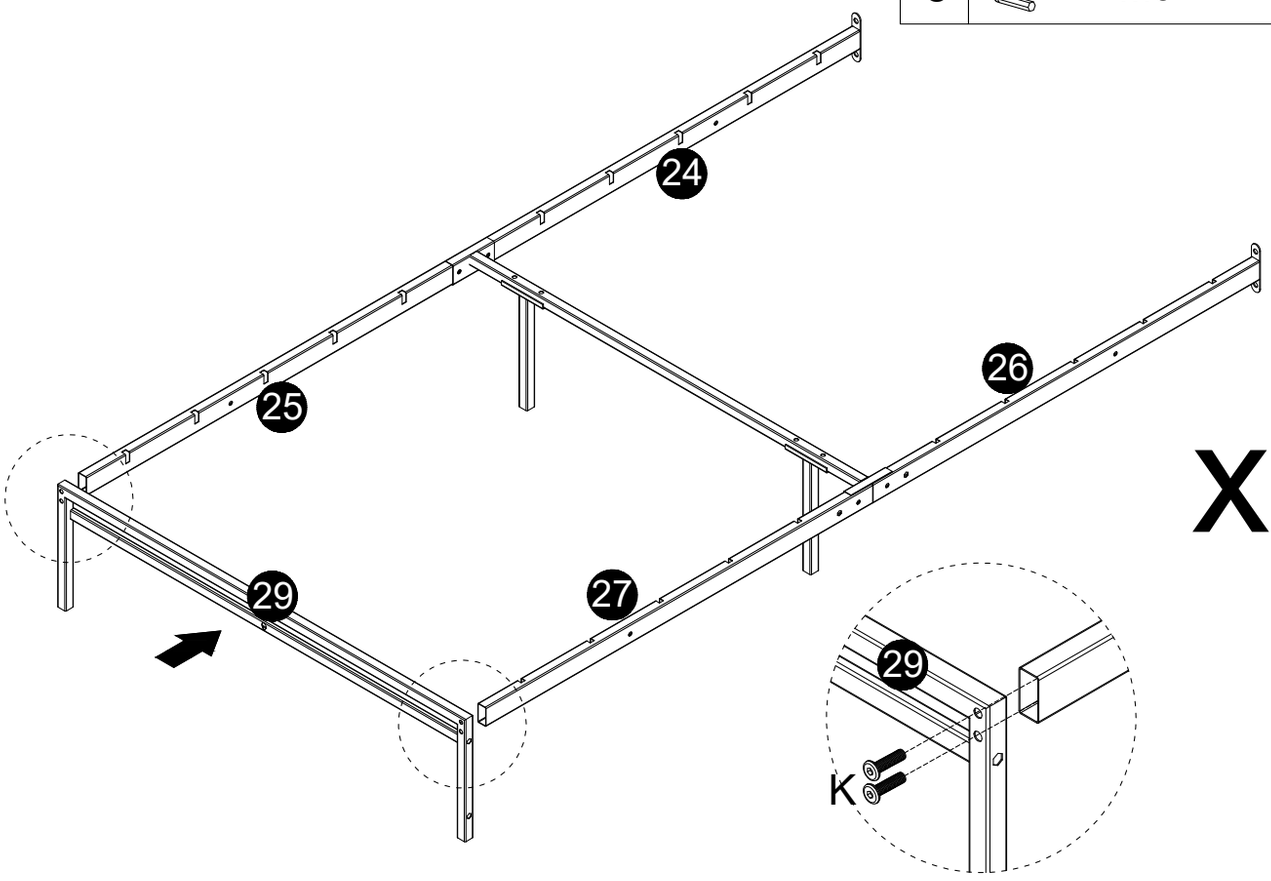

x2

14

b	M8&M6	1pc

J	8*35mm	8pcs
S	M8	8pcs
R	M8	8pcs
d	M8	1pc

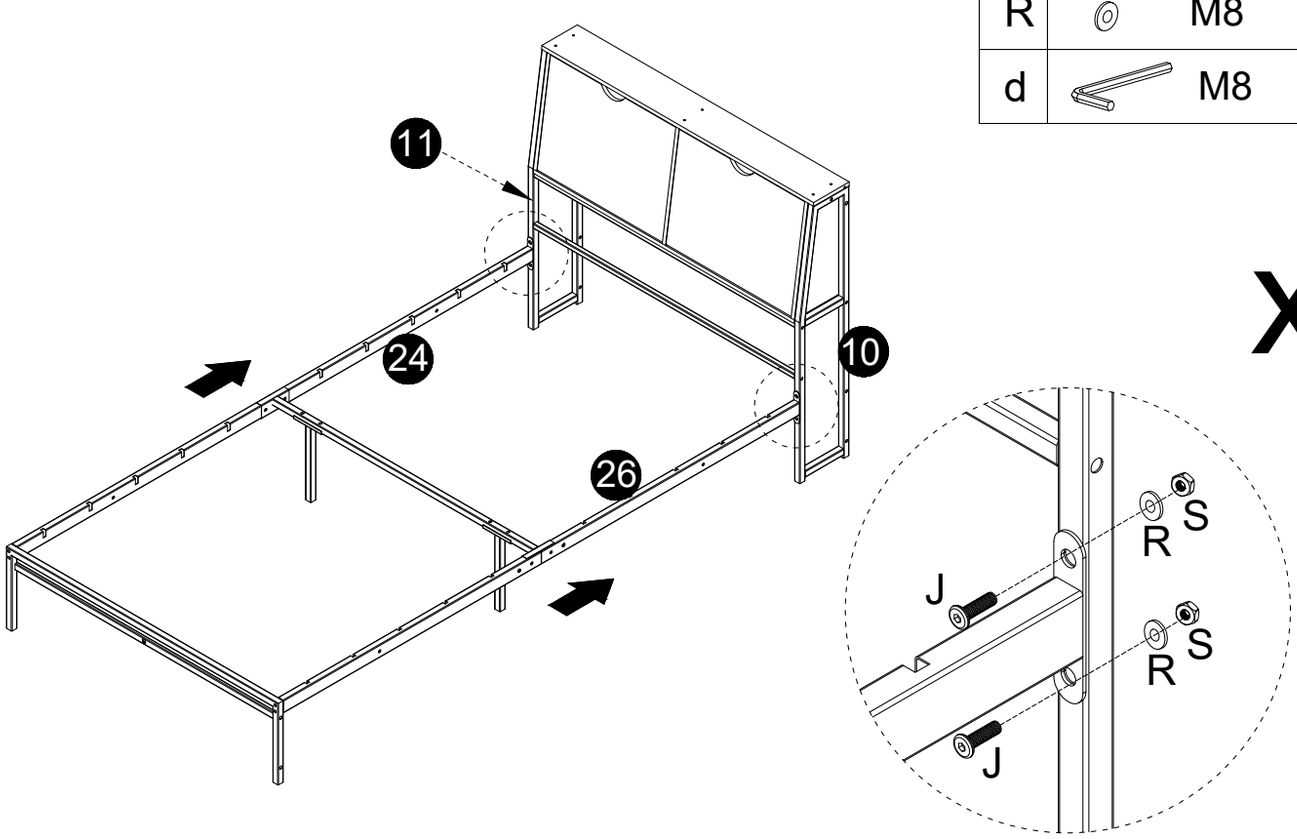

x2

15

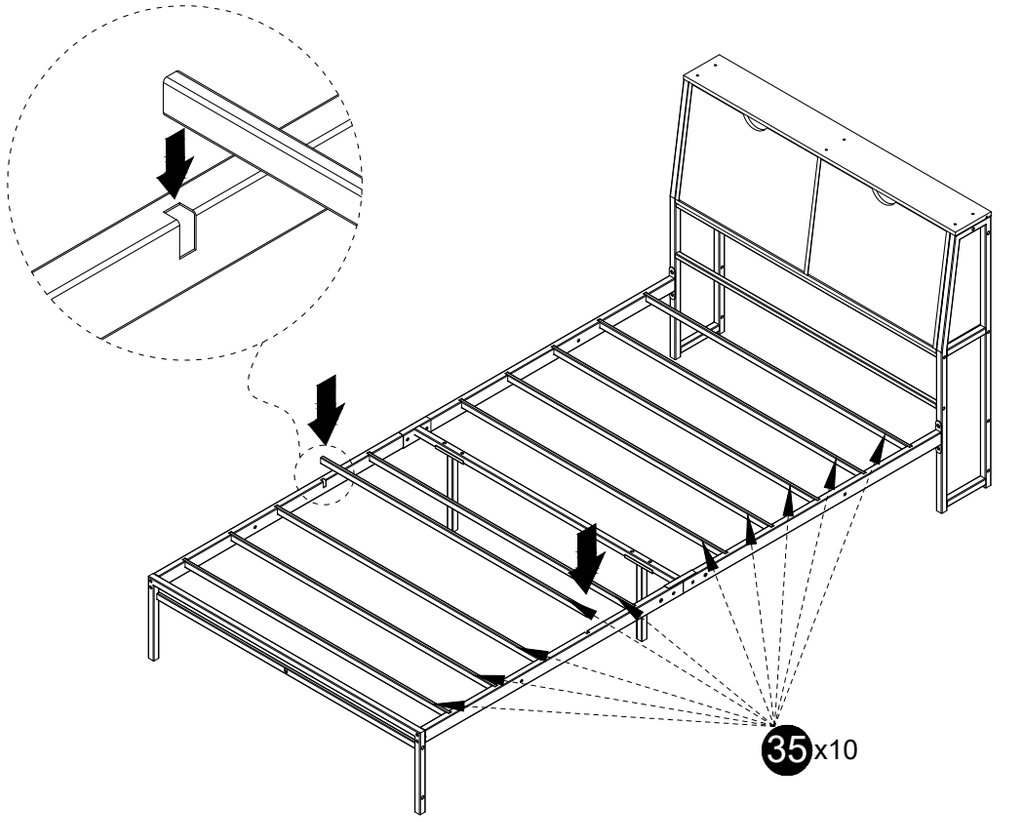

x2

16

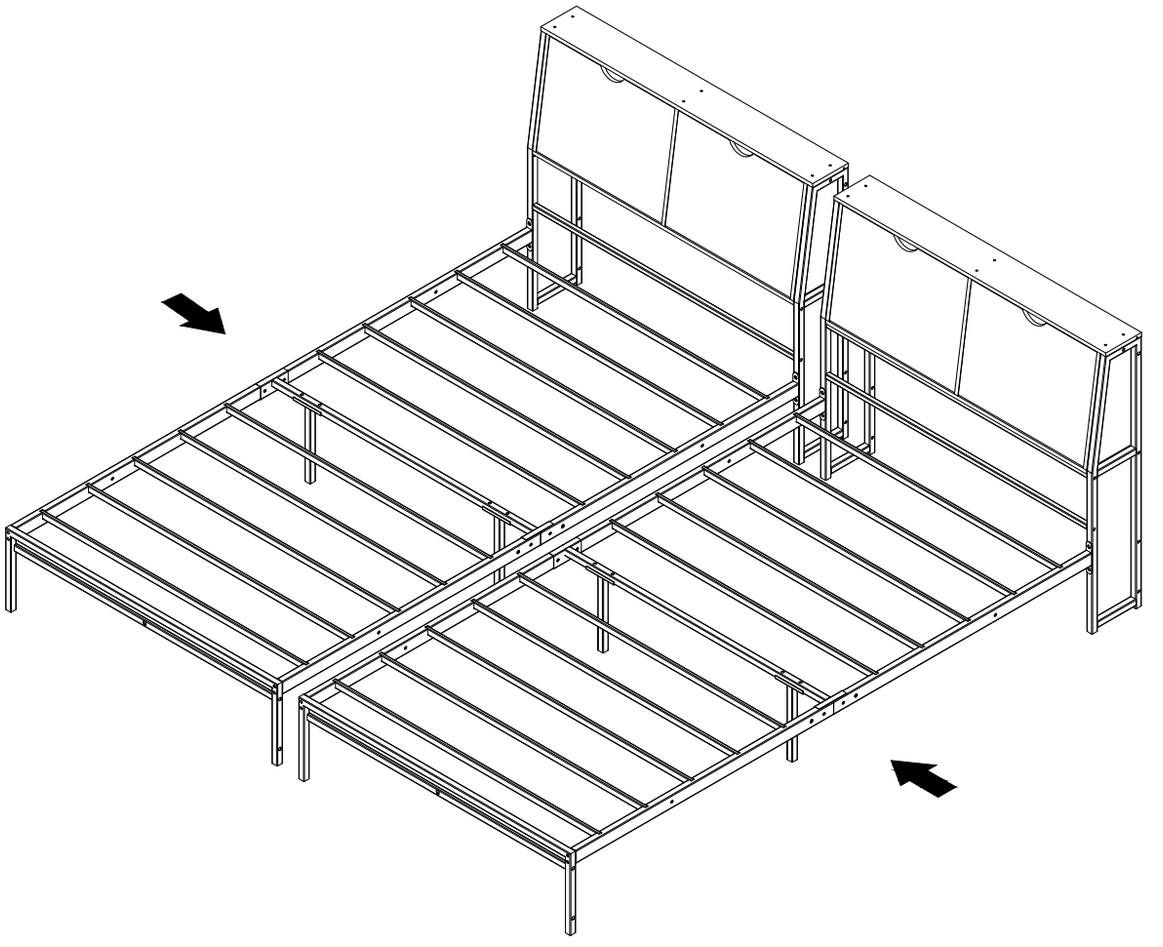

17

e		M6	1pc	C	6*50mm	2pcs
				T	M6	2pcs
				b	M8&M6	1pc

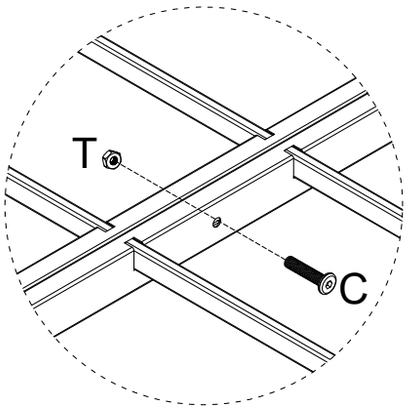

18

e		M6	1pc	C	6*50mm	2pcs
				T	M6	2pcs
				b	M8&M6	1pc

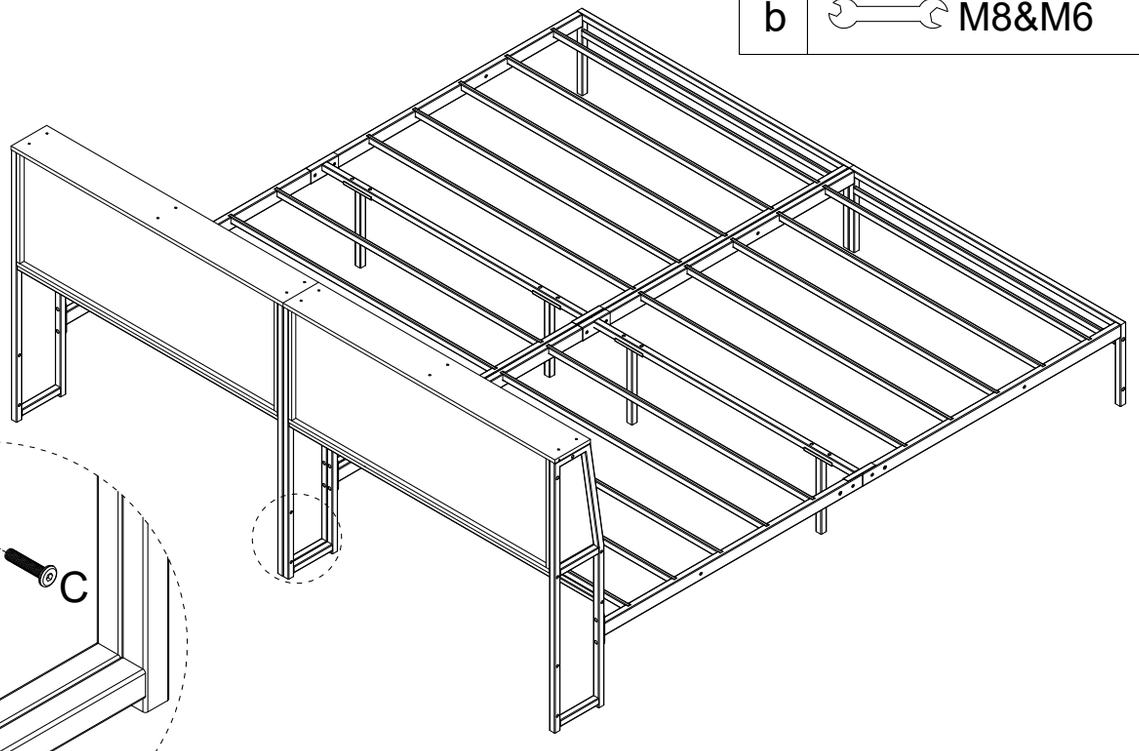

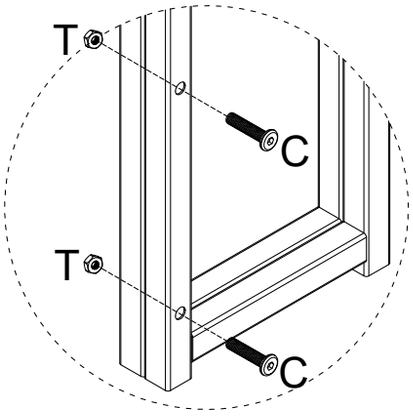

19

E	5*40mm	6pcs
g	M4	1pc

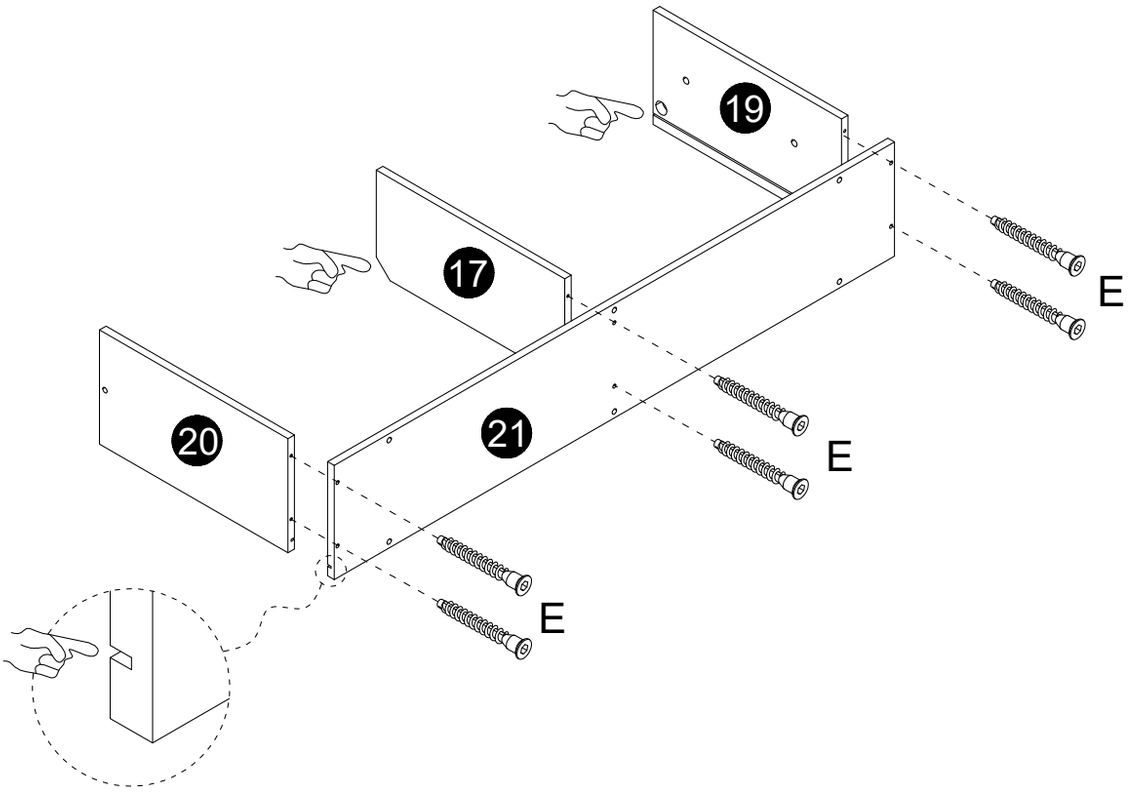

20

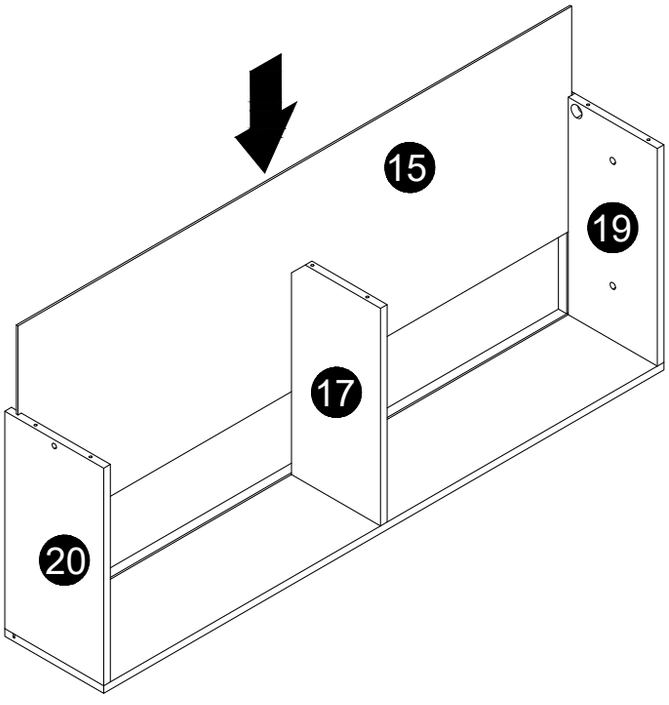

21

E	5*40mm	6pcs
g	M4	1pc

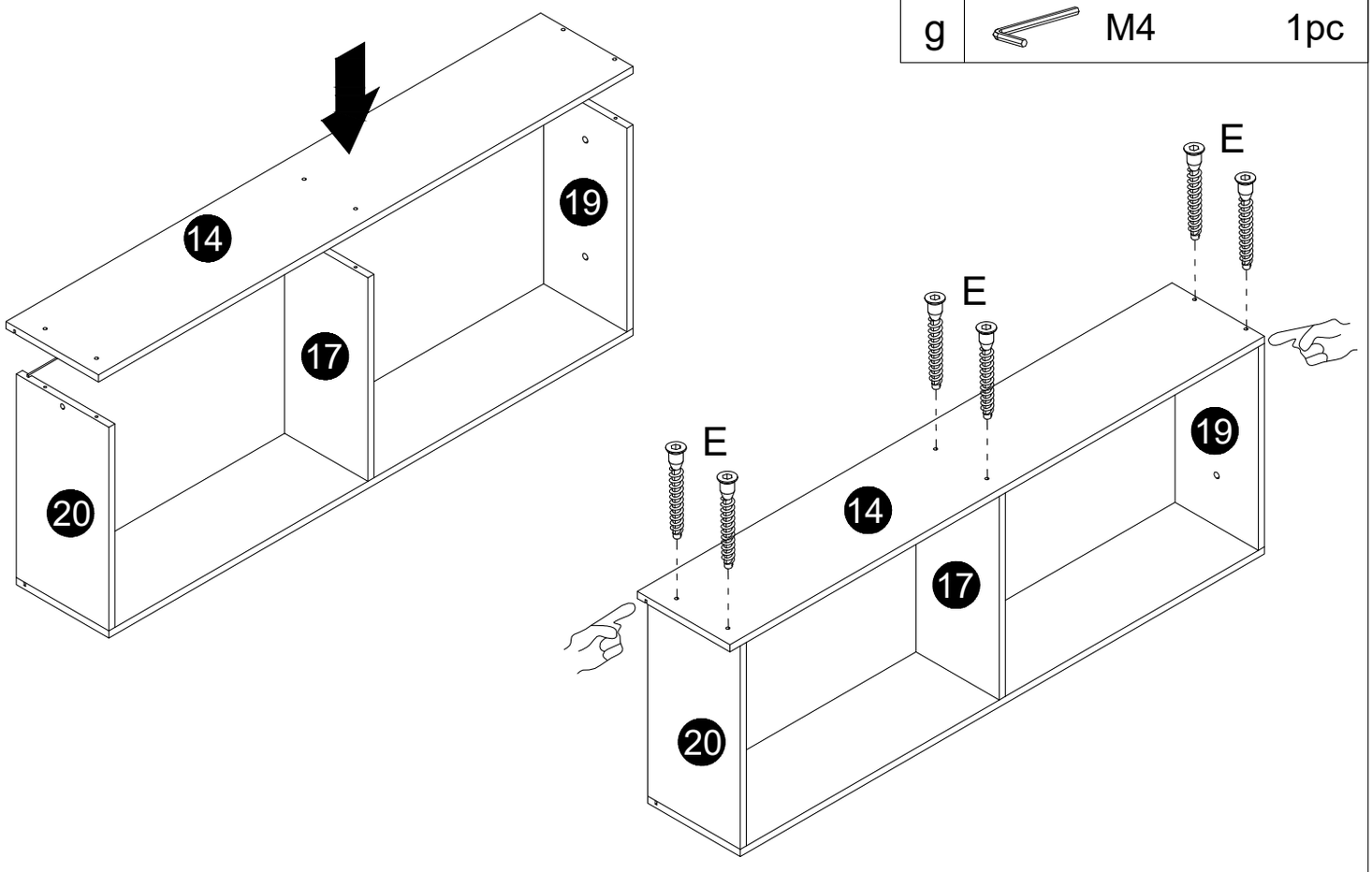

22

E	5*40mm	6pcs
g	M4	1pc

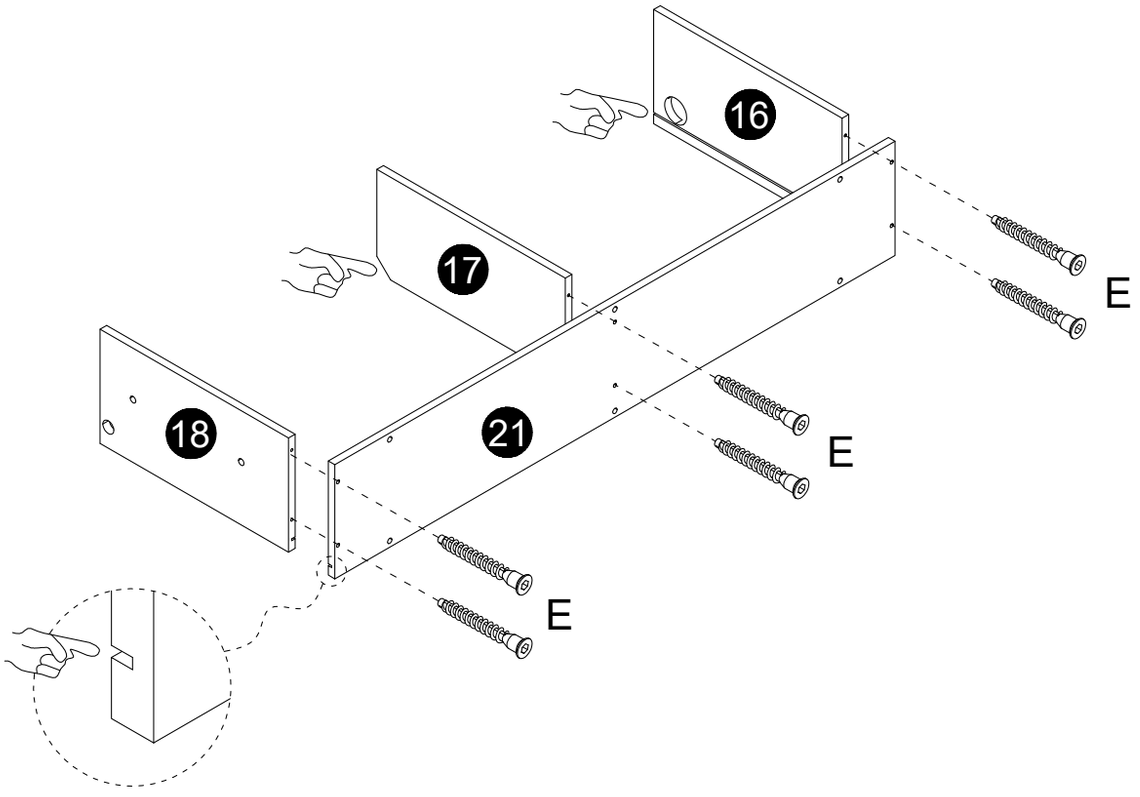

23

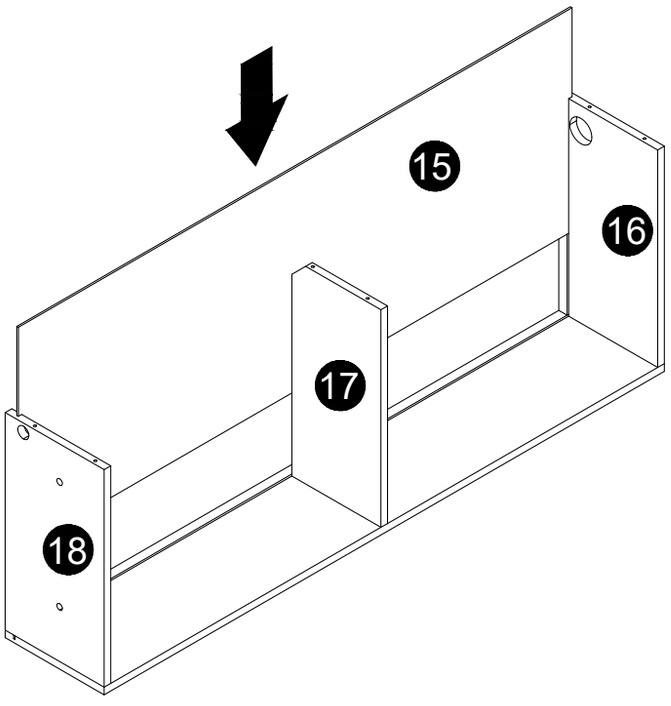

24

E	5*40mm	6pcs
g	M4	1pc

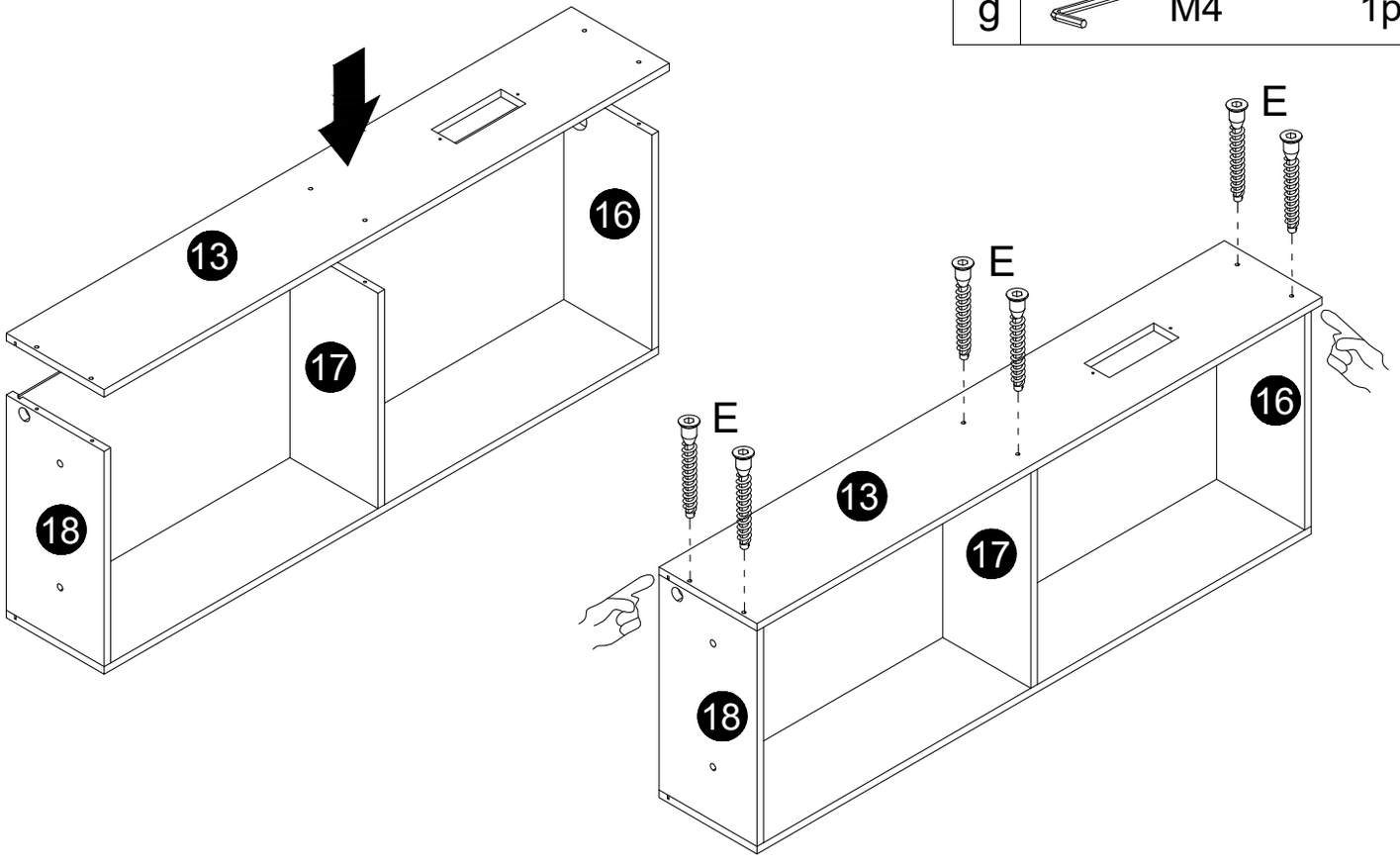

25

M		6*15mm	2pcs
N		6*15mm	2pcs
g		M4	1pc
e		M6	1pc

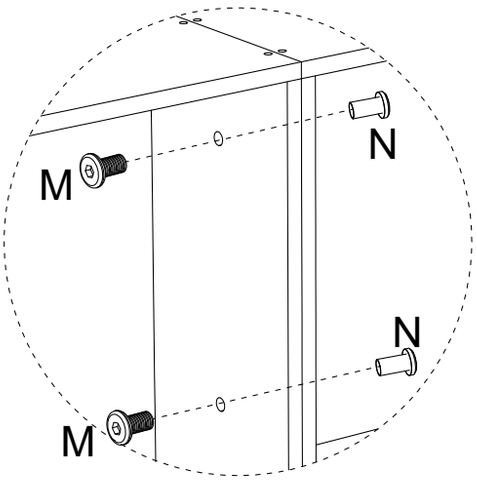

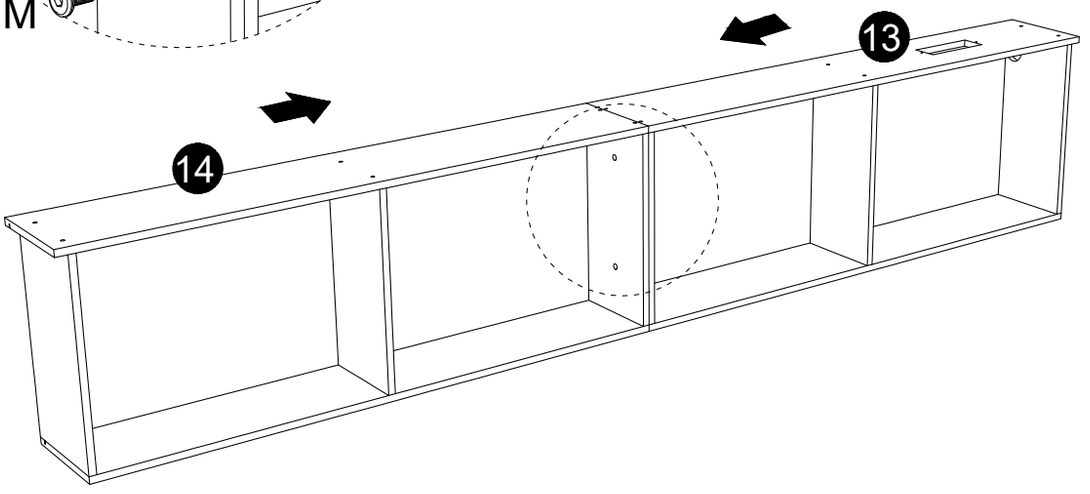

26

e		M6	1pc	L		6*60mm	2pcs
b		M8&M6	1pc	K		6*40mm	4pcs
				T		M6	2pcs

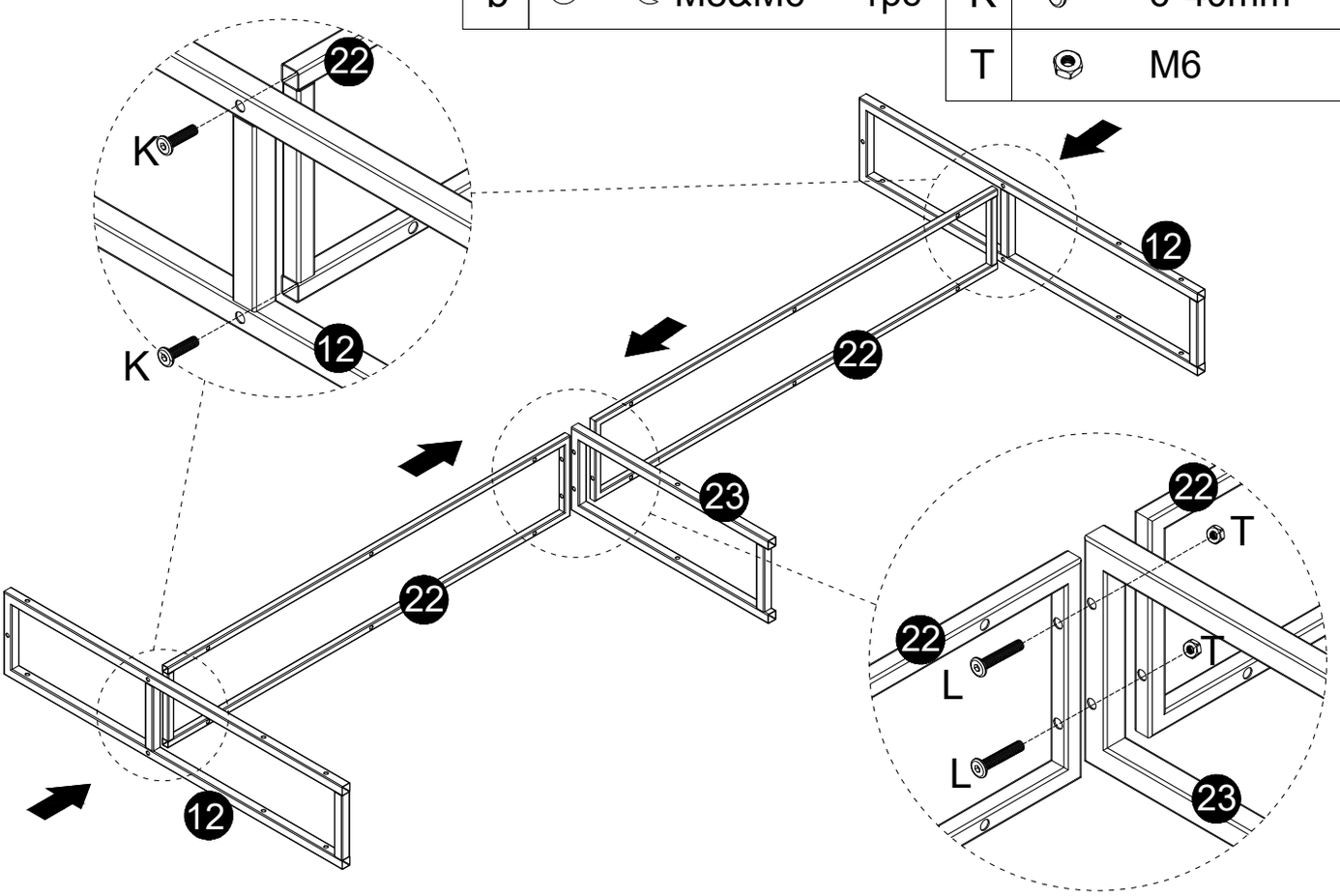

27

e	M6	1pc	B	6*25mm	12pcs

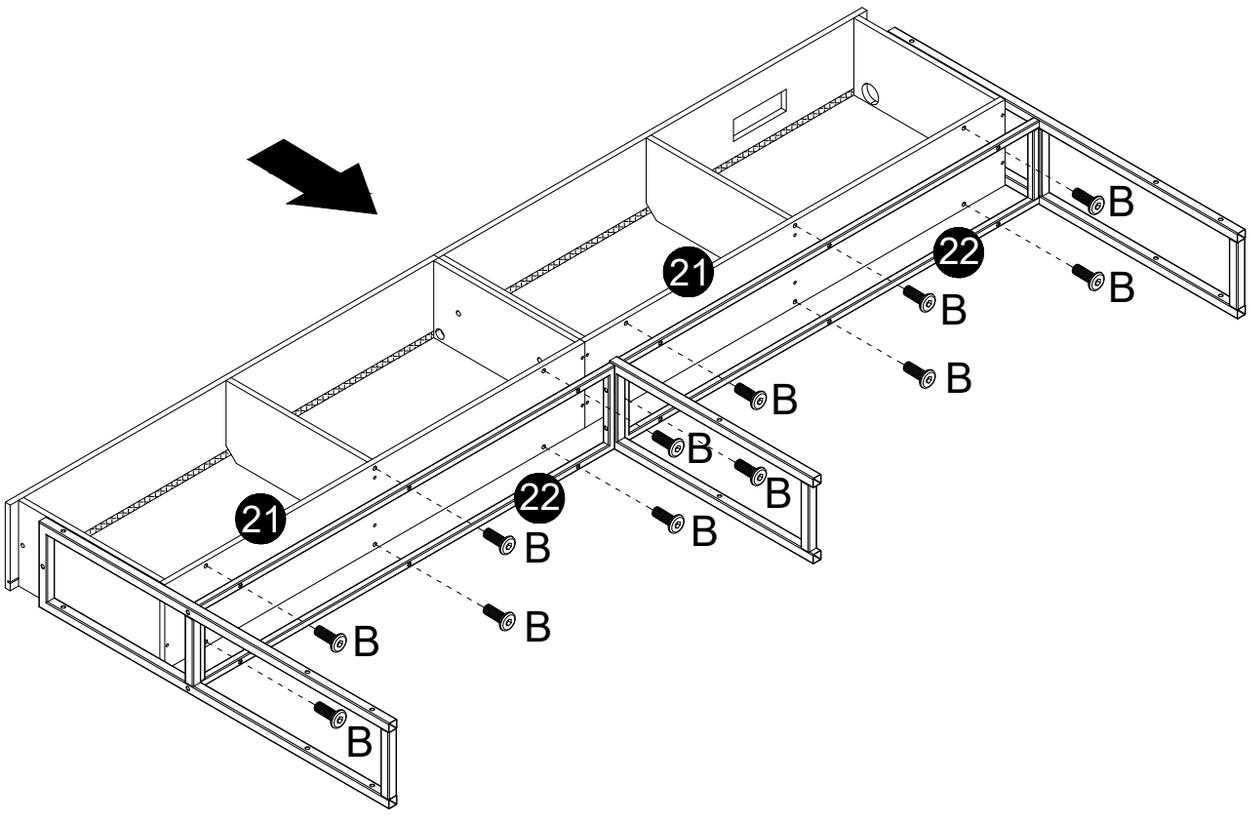

28

e	M6	1pc	A	6*28mm	2pcs
			Y		1pc

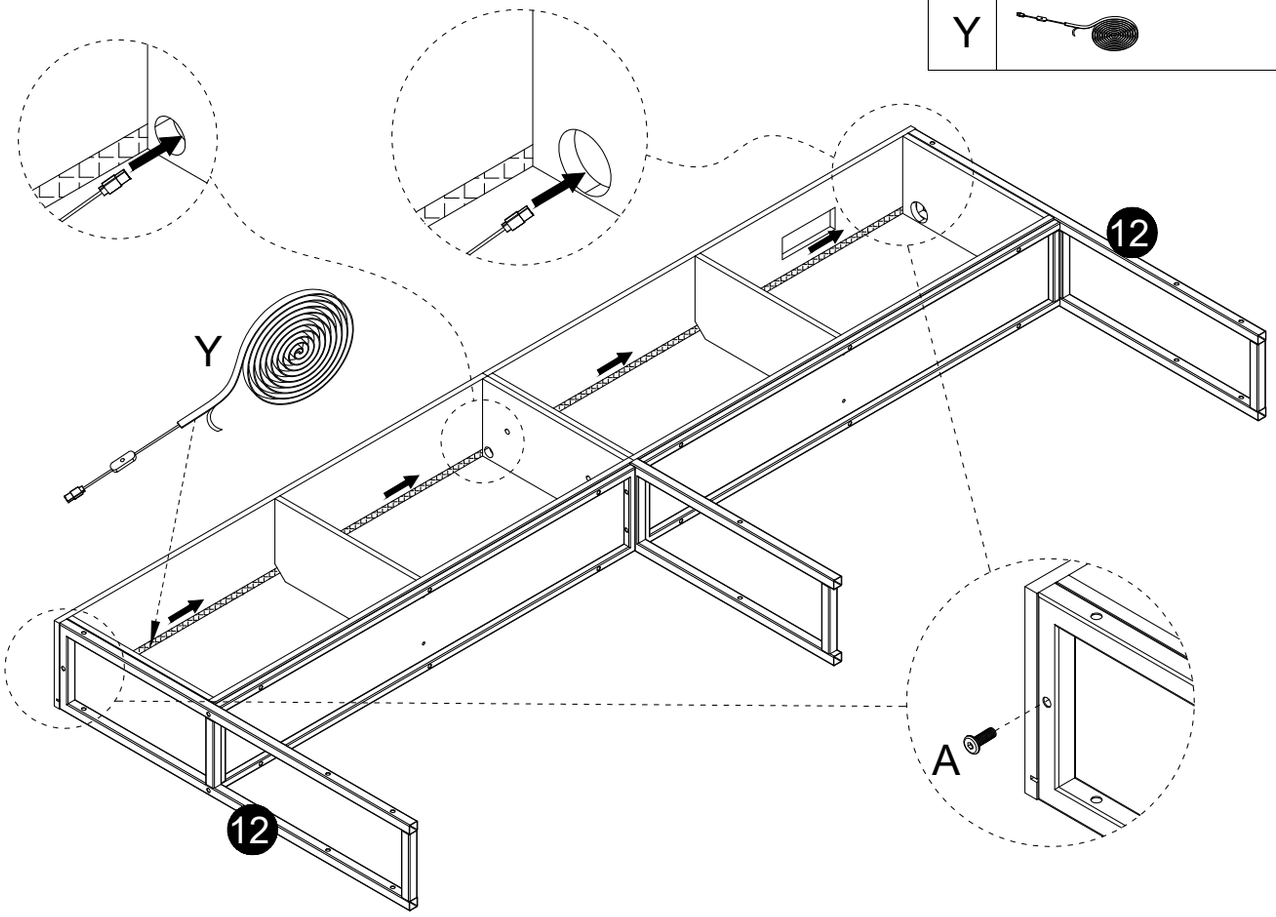

29

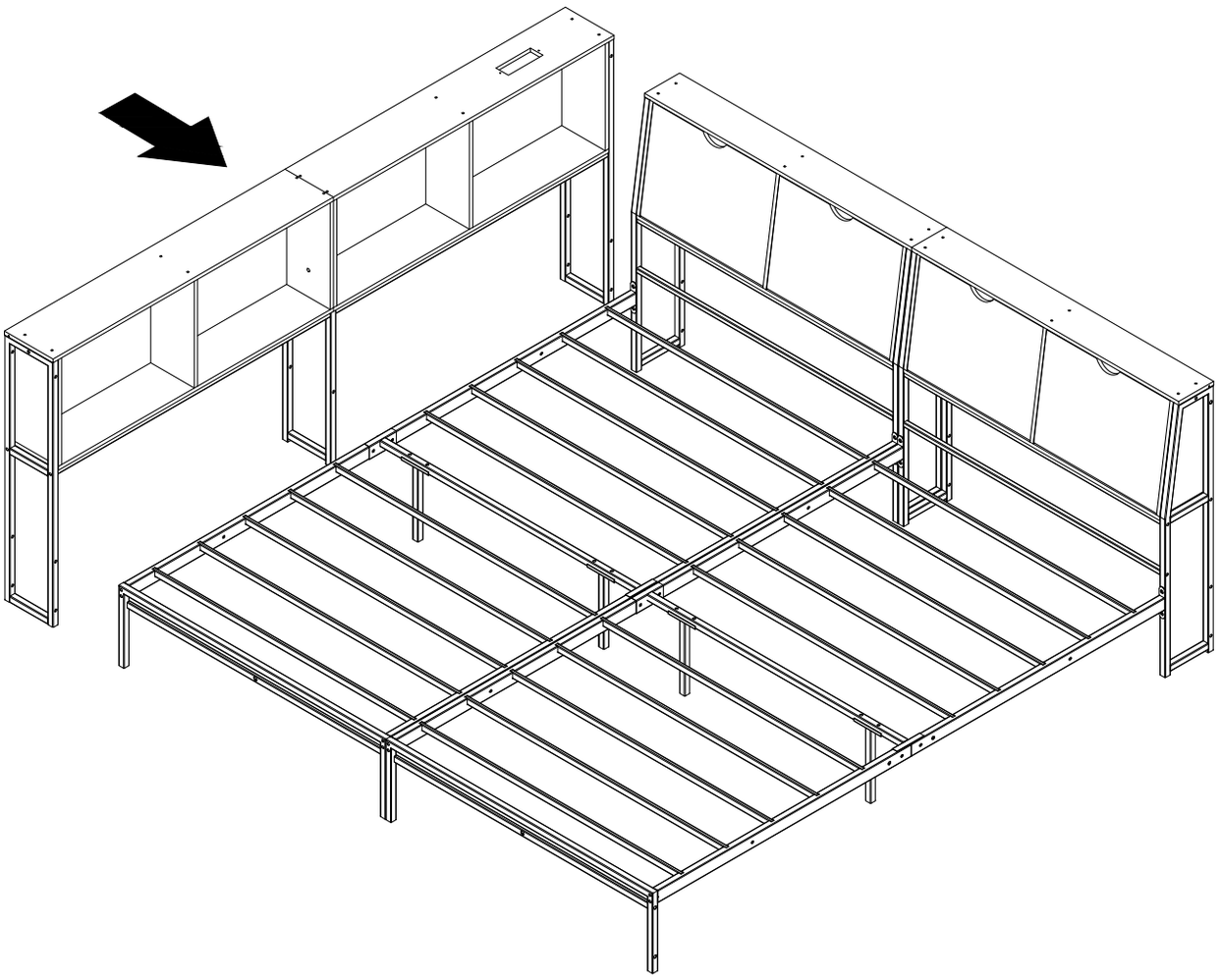

30

e	M6	1pc	A	6*28mm	1pc
b	M8&M6	1pc	C	6*50mm	2pcs
			T	M6	2pcs

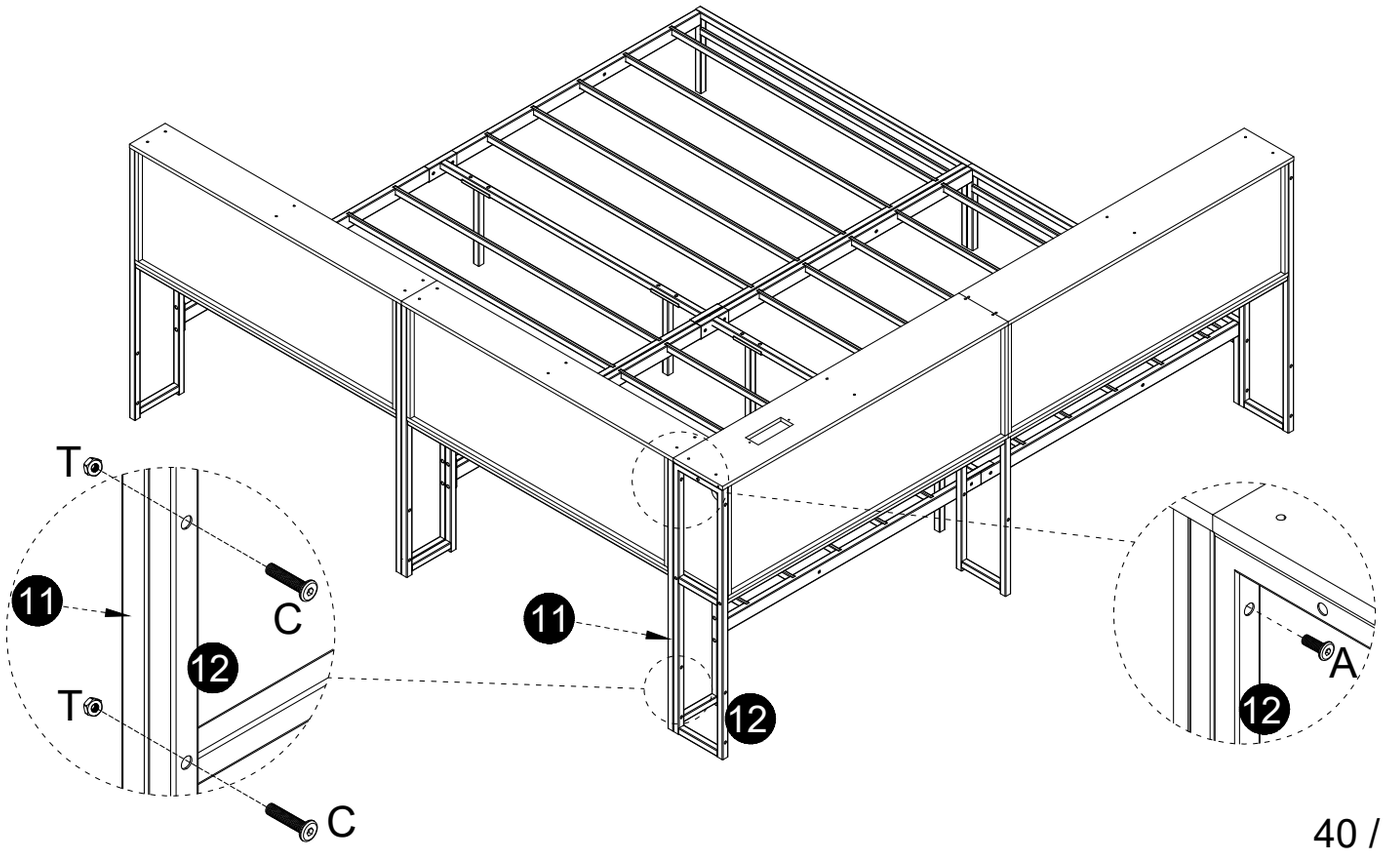

31

e	M6	1pc	A	6*28mm	3pcs

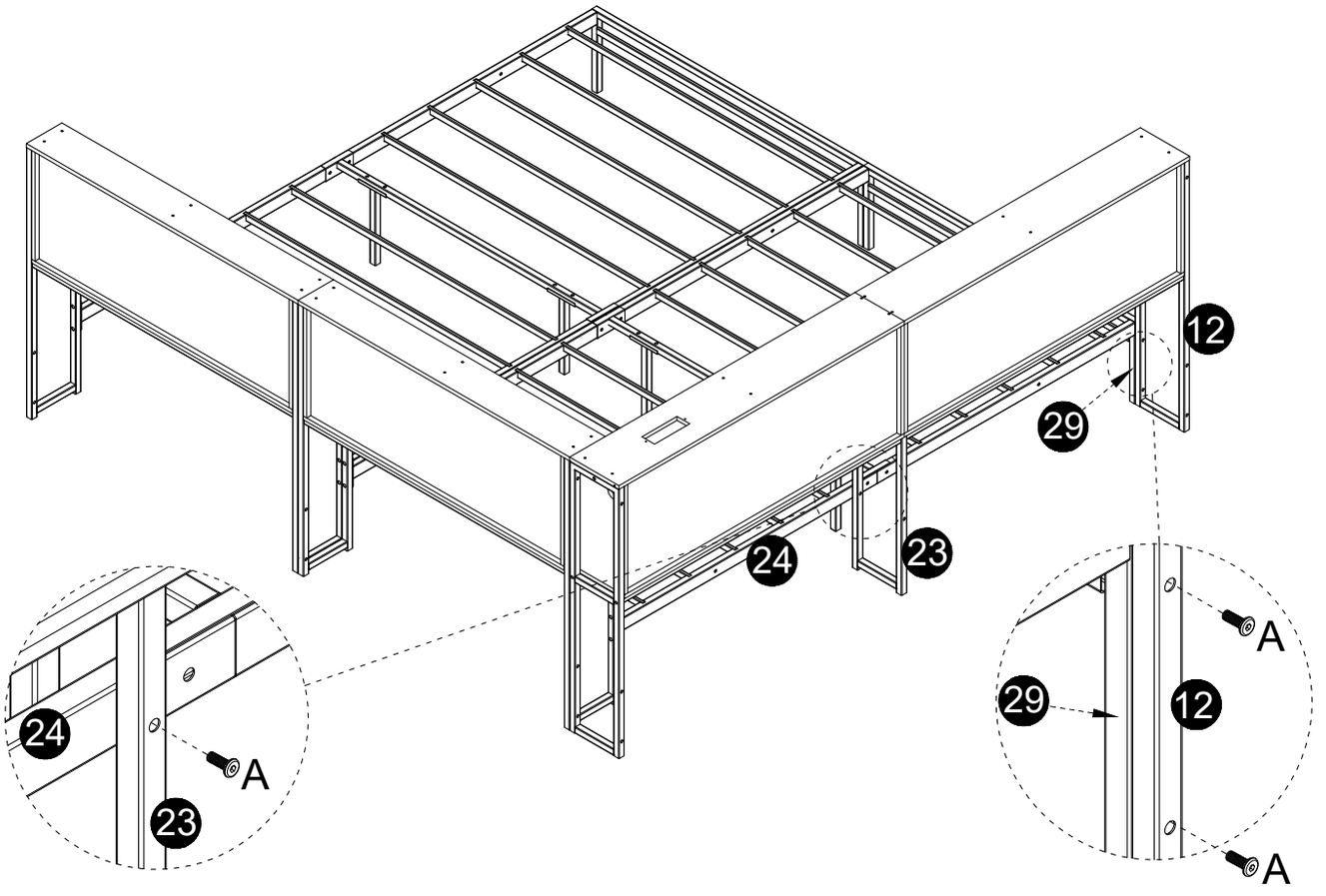

32

G	4*10mm	2pcs
Z		1pc
f		1pc

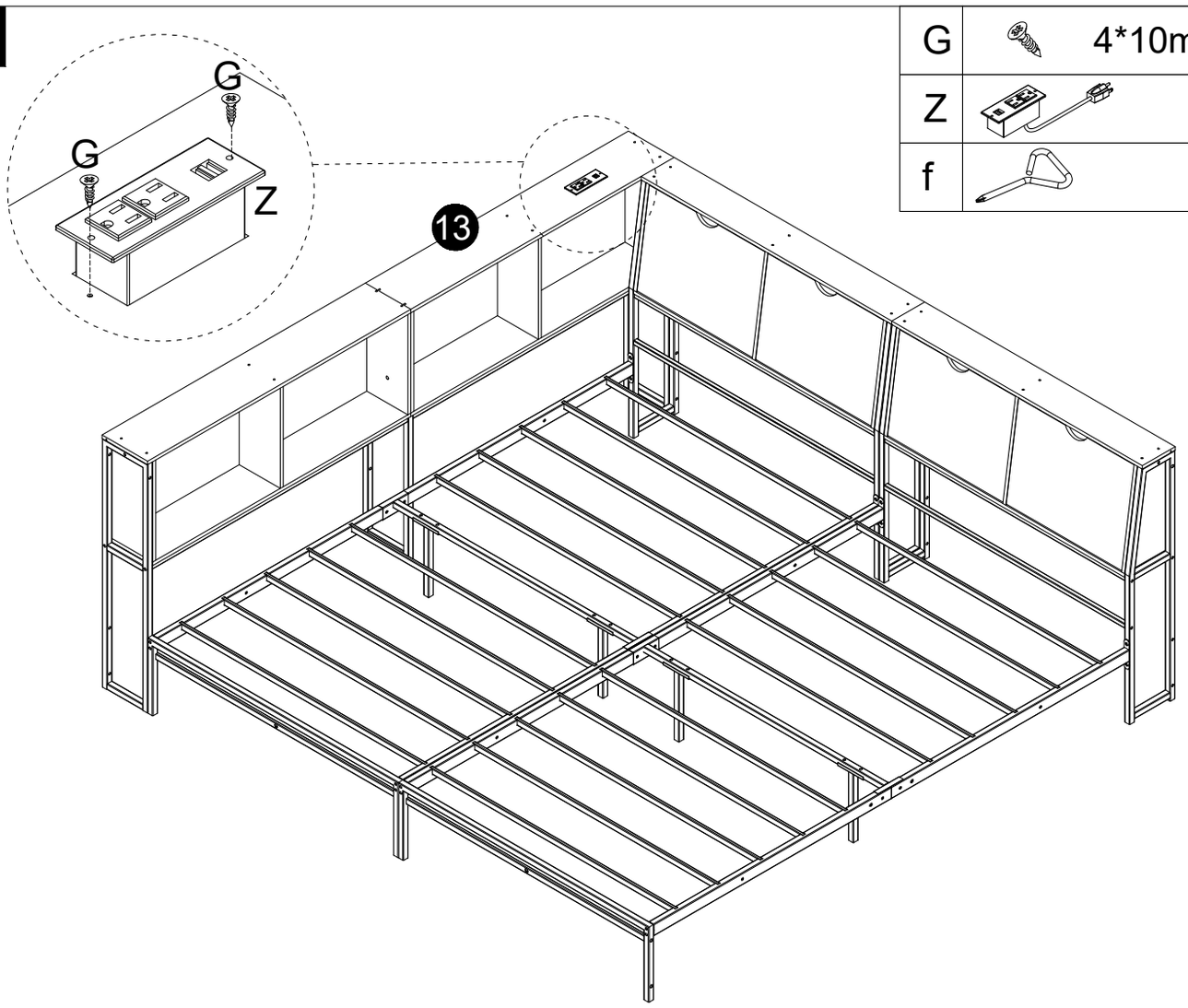

33

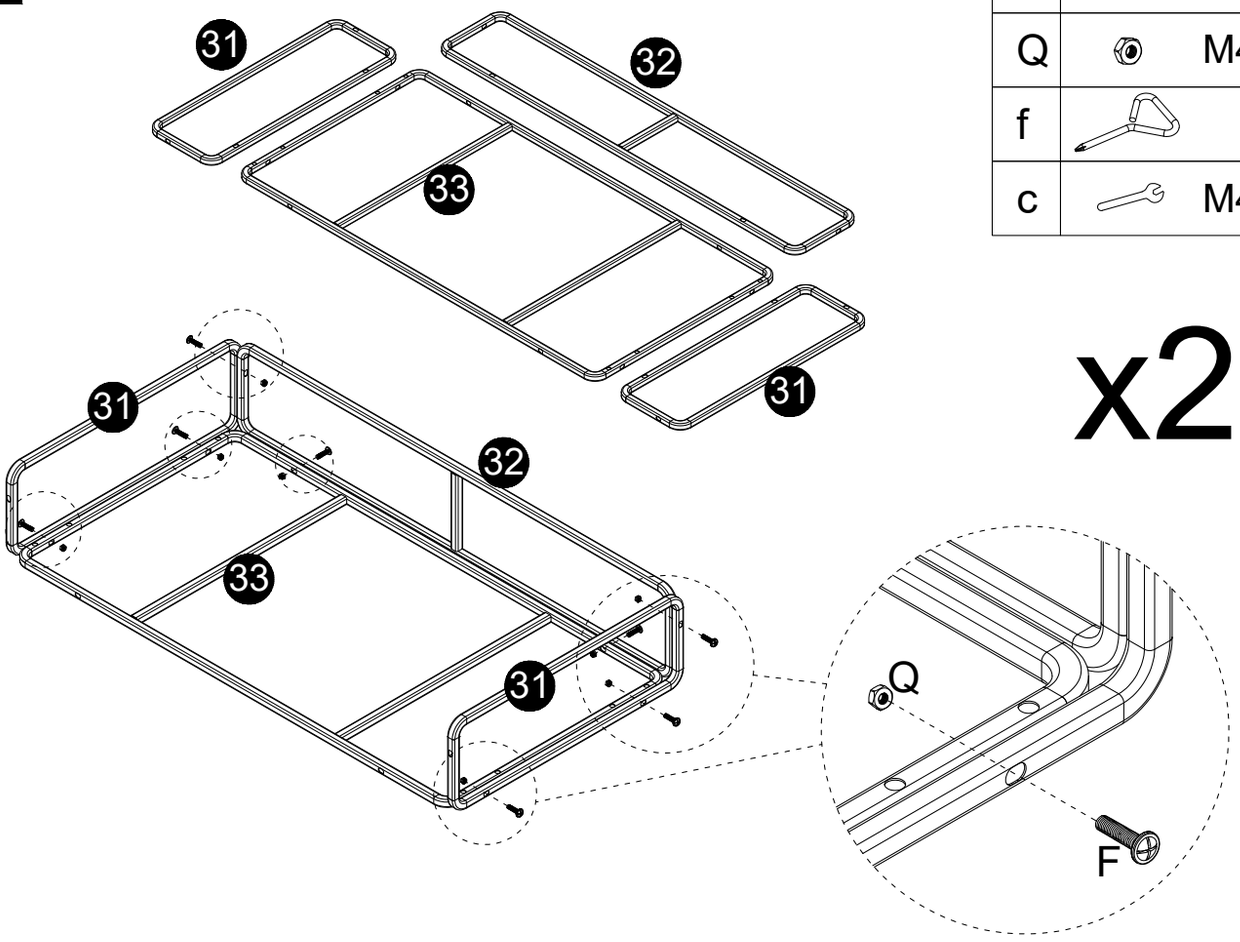

F		4*28mm	16pcs
Q		M4	16pcs
f			1pc
c		M4	1pc

x2

34

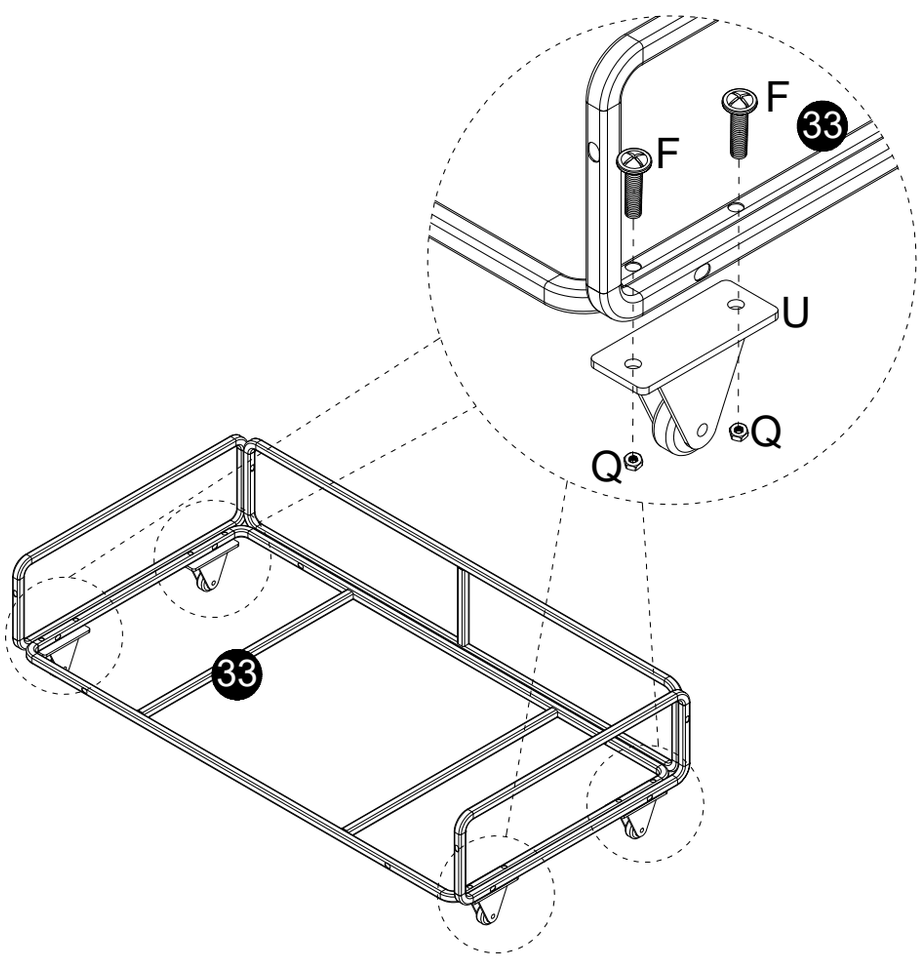

F		4*28mm	16pcs
Q		M4	16pcs
U		1.0	8pcs
f			1pc
c		M4	1pc

x2

35

I		4*18mm	8pcs
f	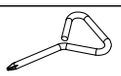		1pc

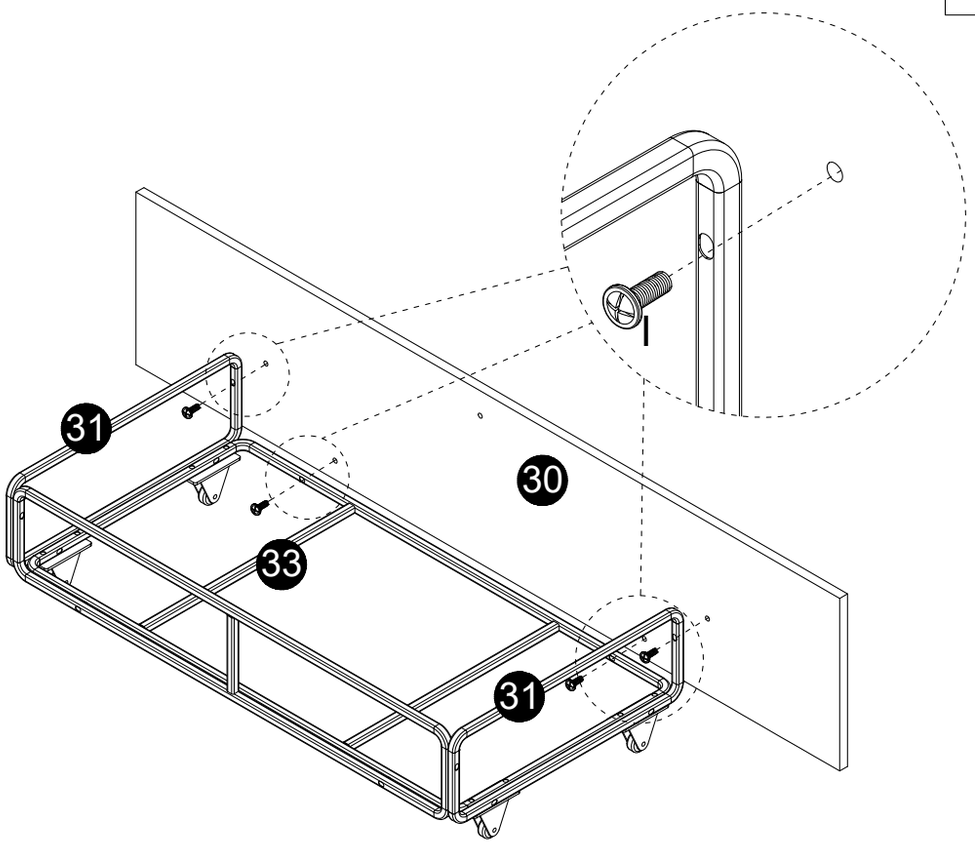

x2

36

O		4*11mm	2pcs
g	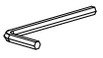	M4	1pc

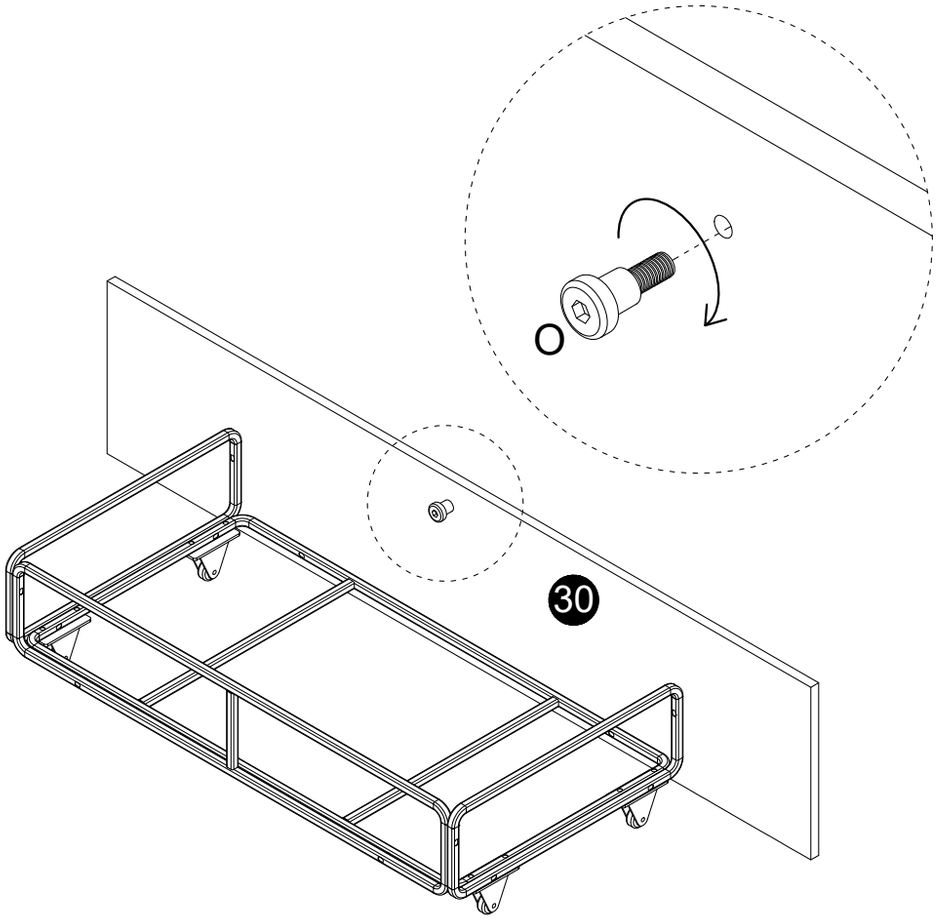

x2

37

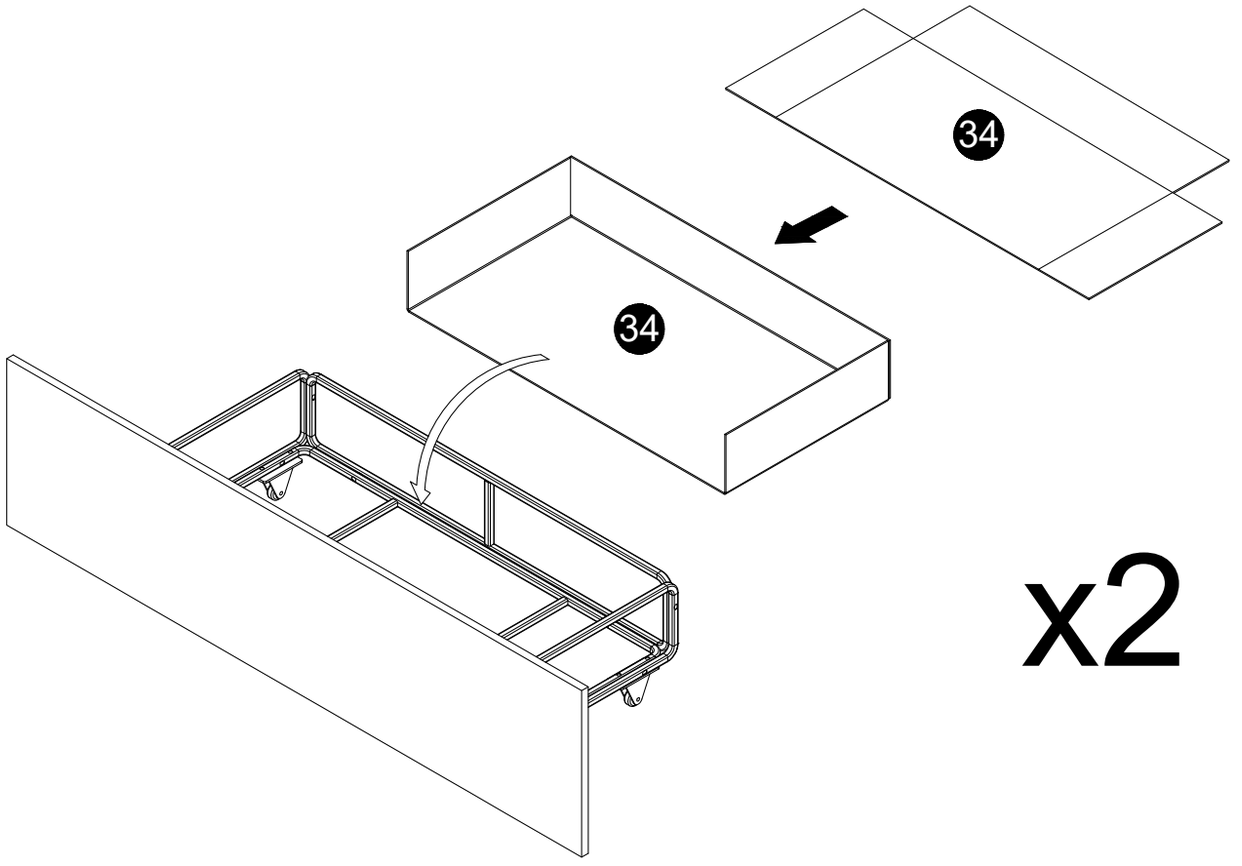

38

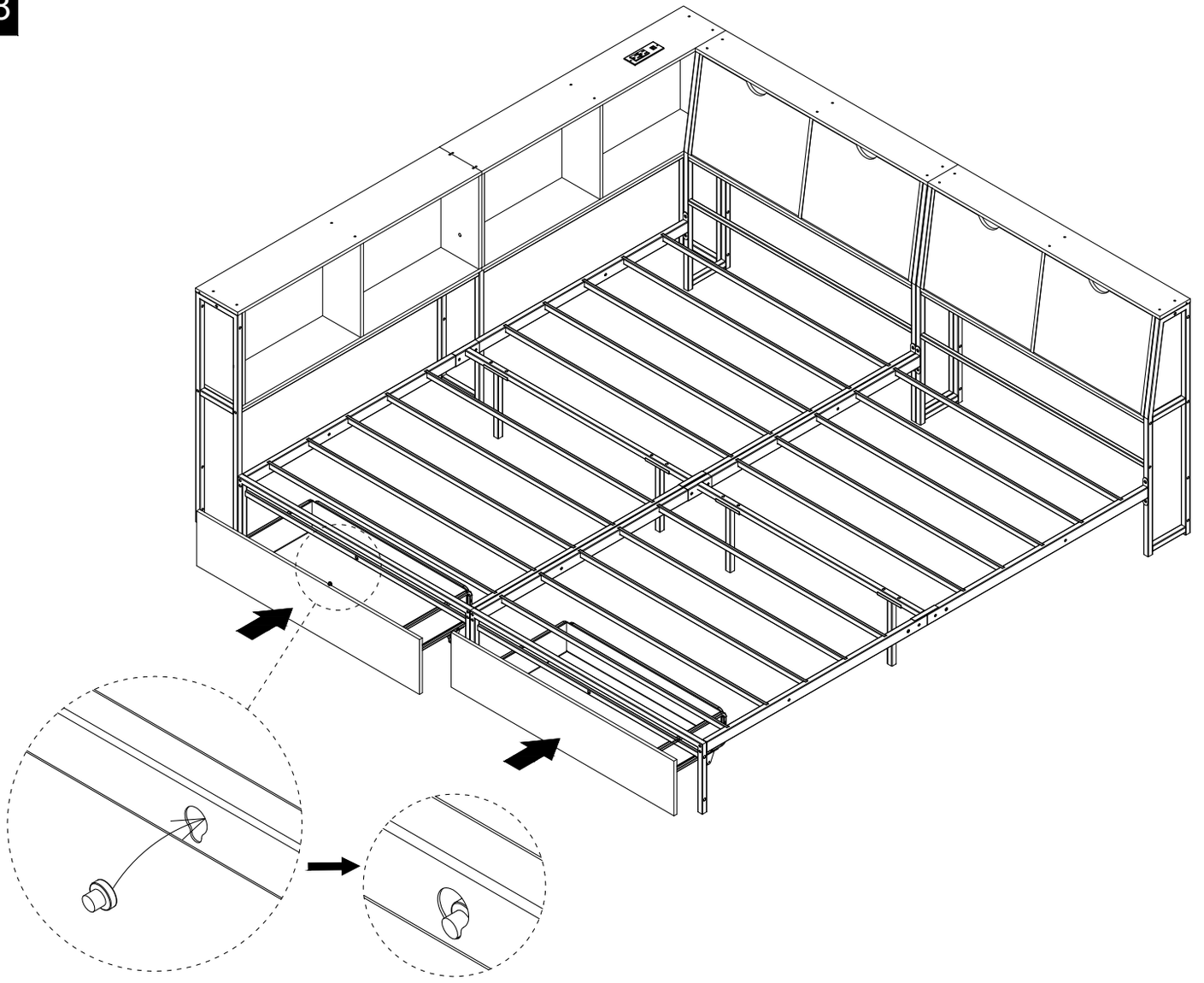

39

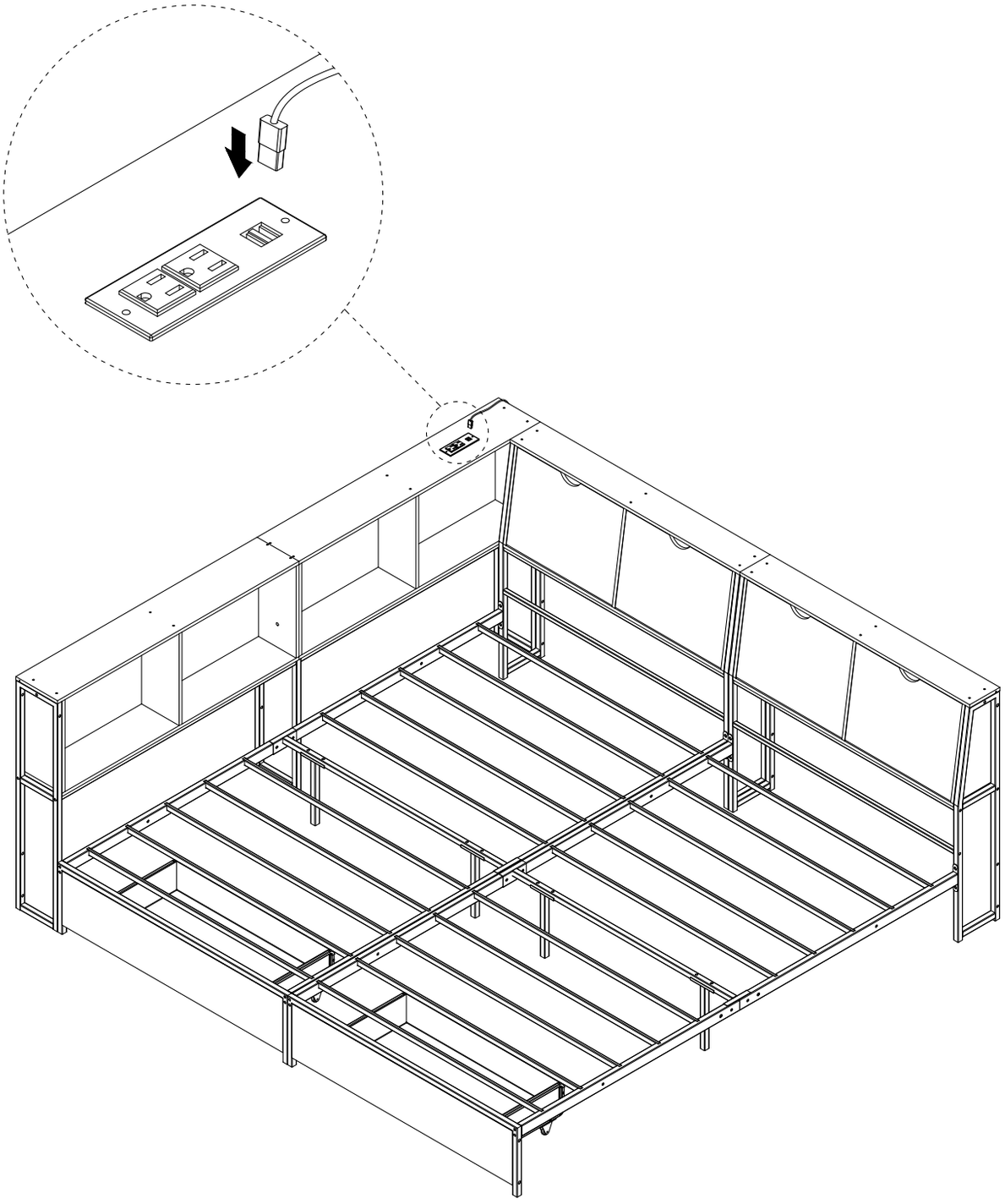

The third type:
Two twin size beds(one bed with side-storage)

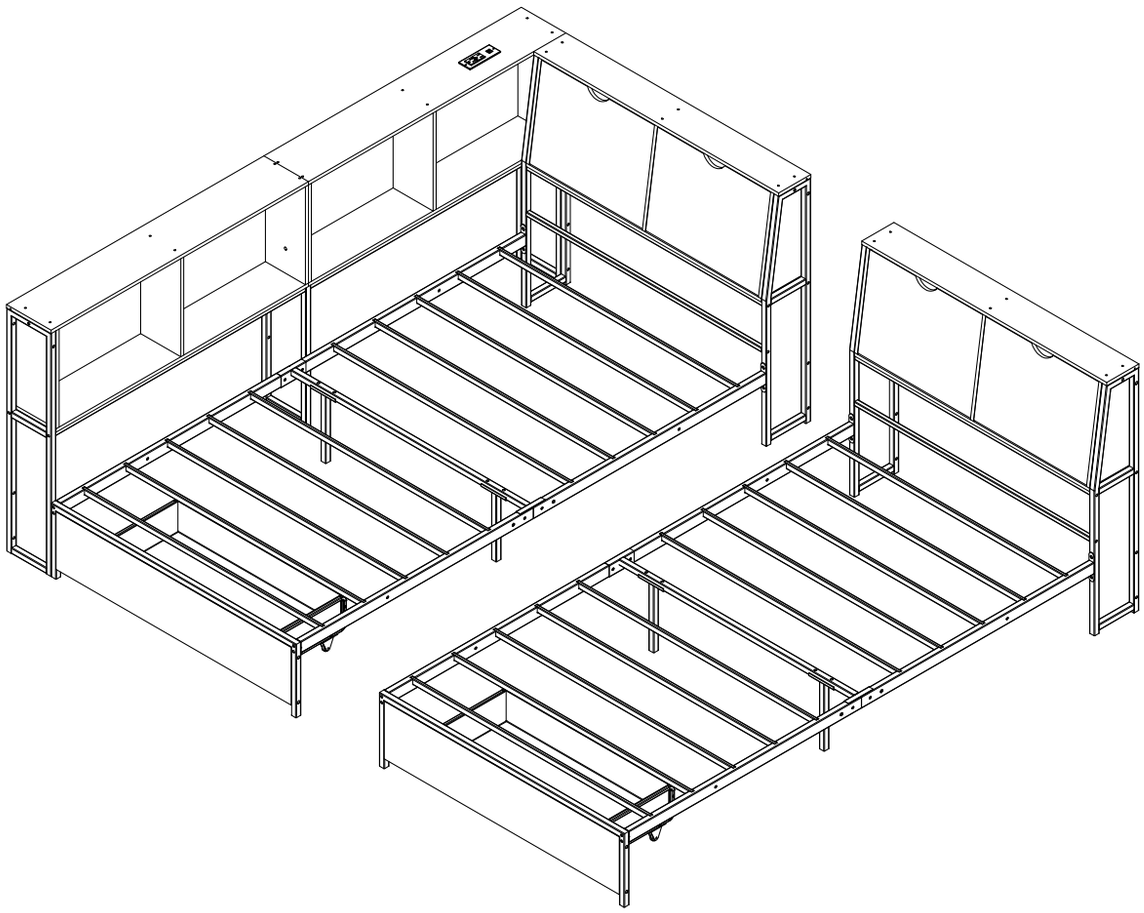

Note:
1.Should be assembled on flat ground to keep balance.
2.Before completing the installation, do not tighten the screws.

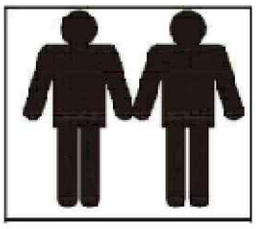

It needs at least
two people to install.



Before starting the assembly, you must read the whole manual and follow the instructions

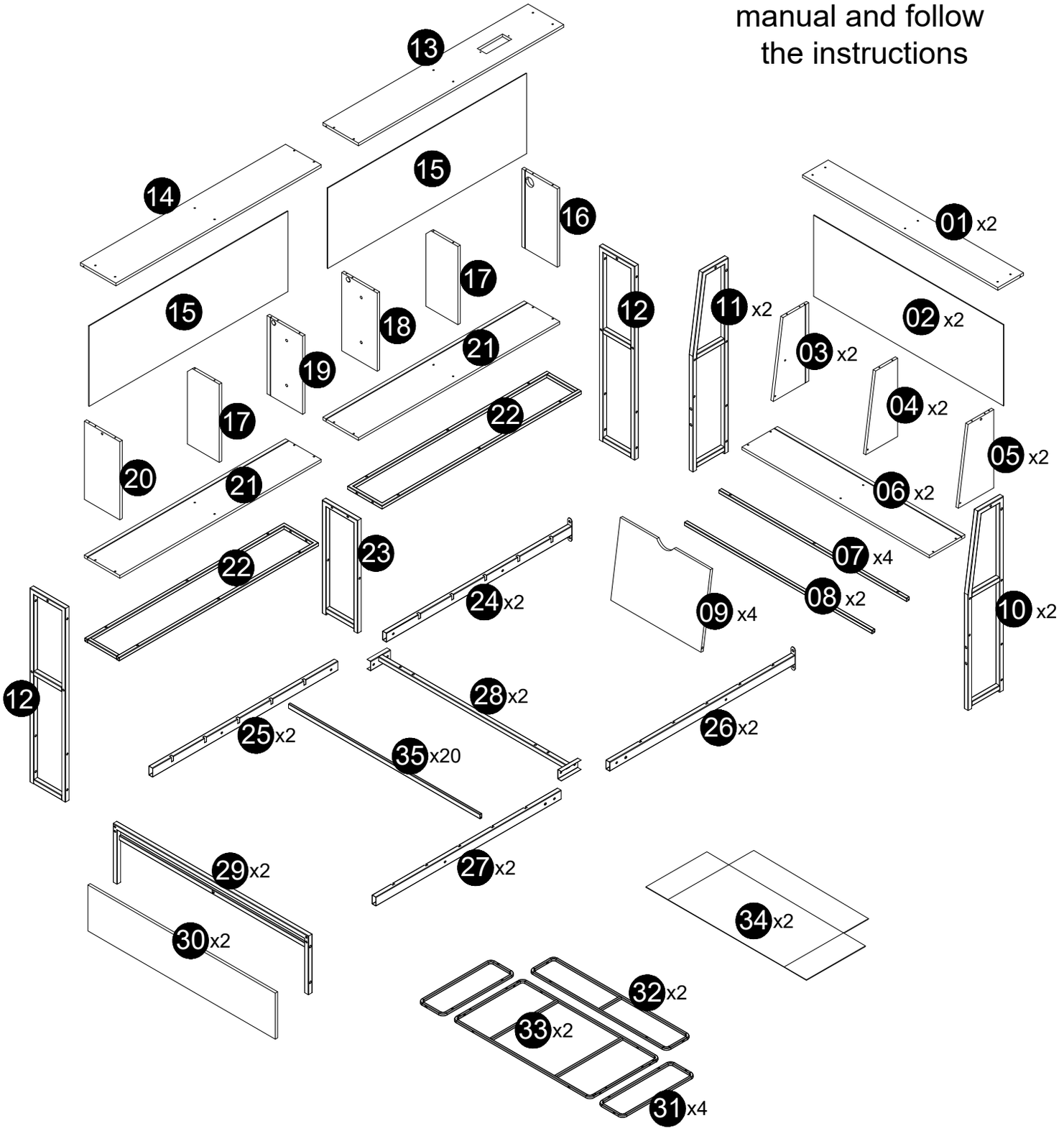

1

G	4*10mm	8pcs
W		4pcs
f		1pc

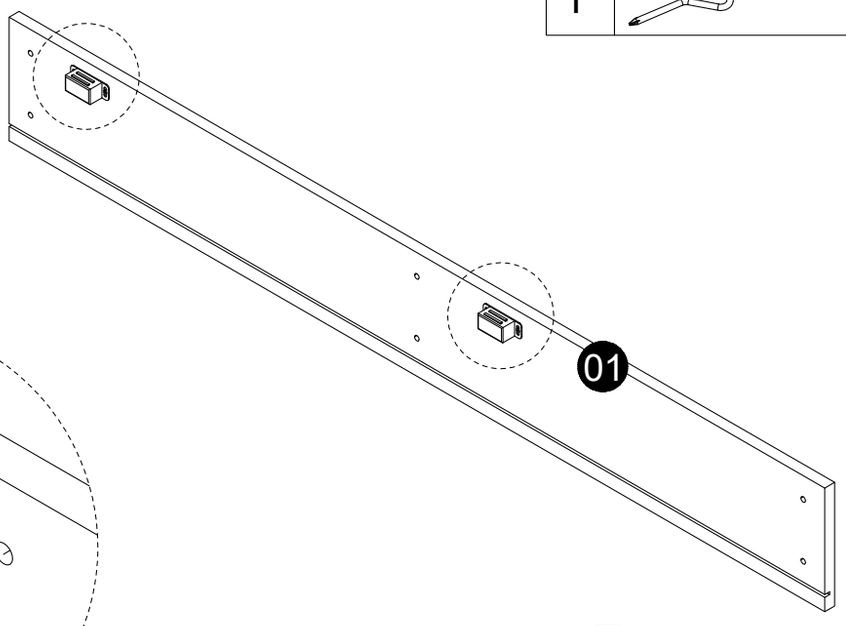

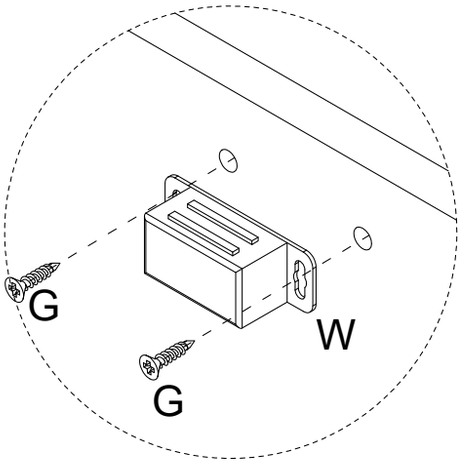

x2

2

G	4*10mm	8pcs
W		4pcs
f		1pc

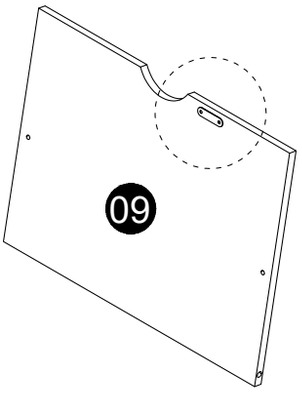

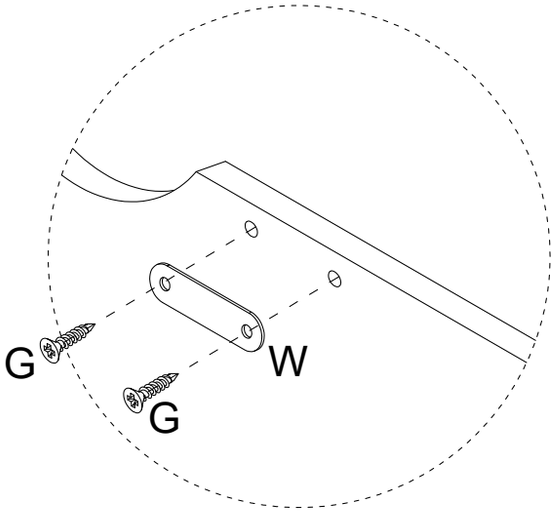

x4

3

E	5*40mm	12pcs
g	M4	1pc

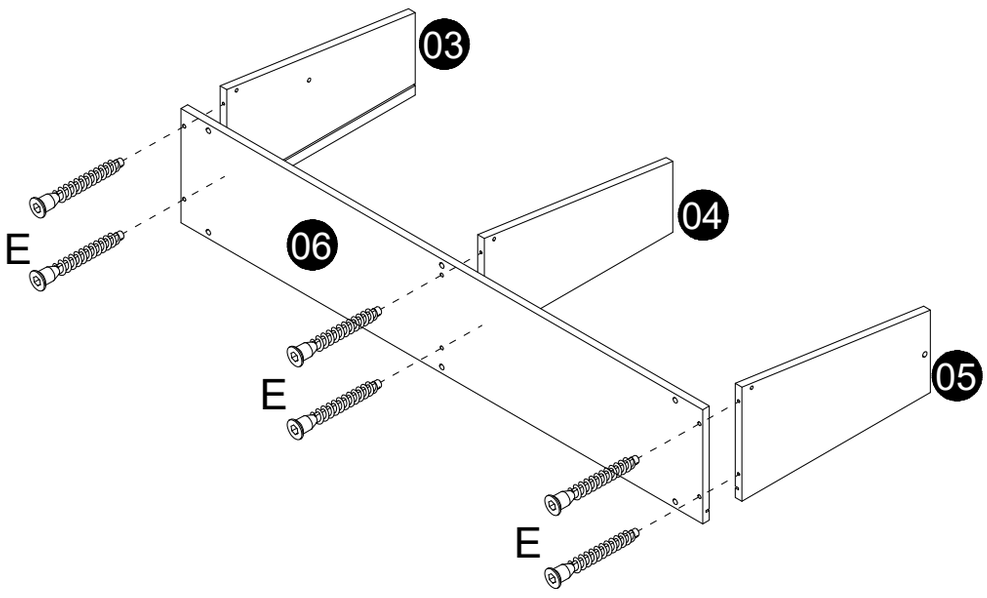

x2

4

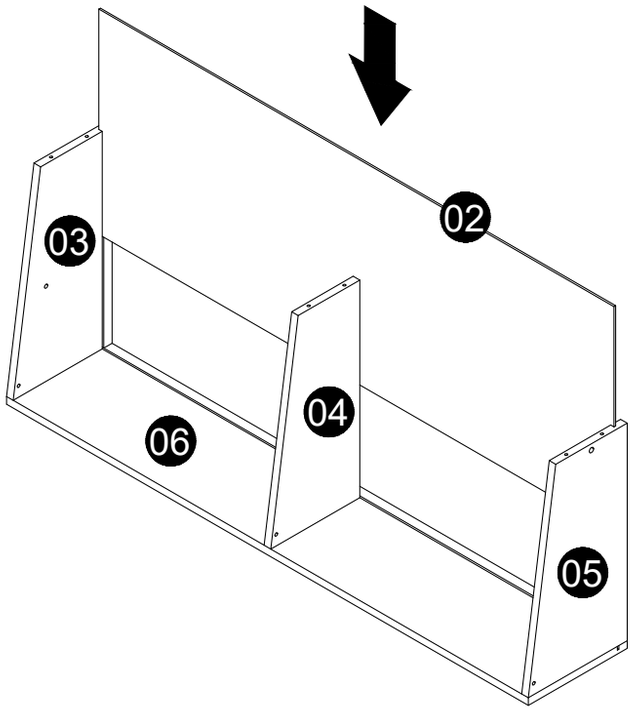

x2

5

E	5*40mm	12pcs	
g	M4	1pc	

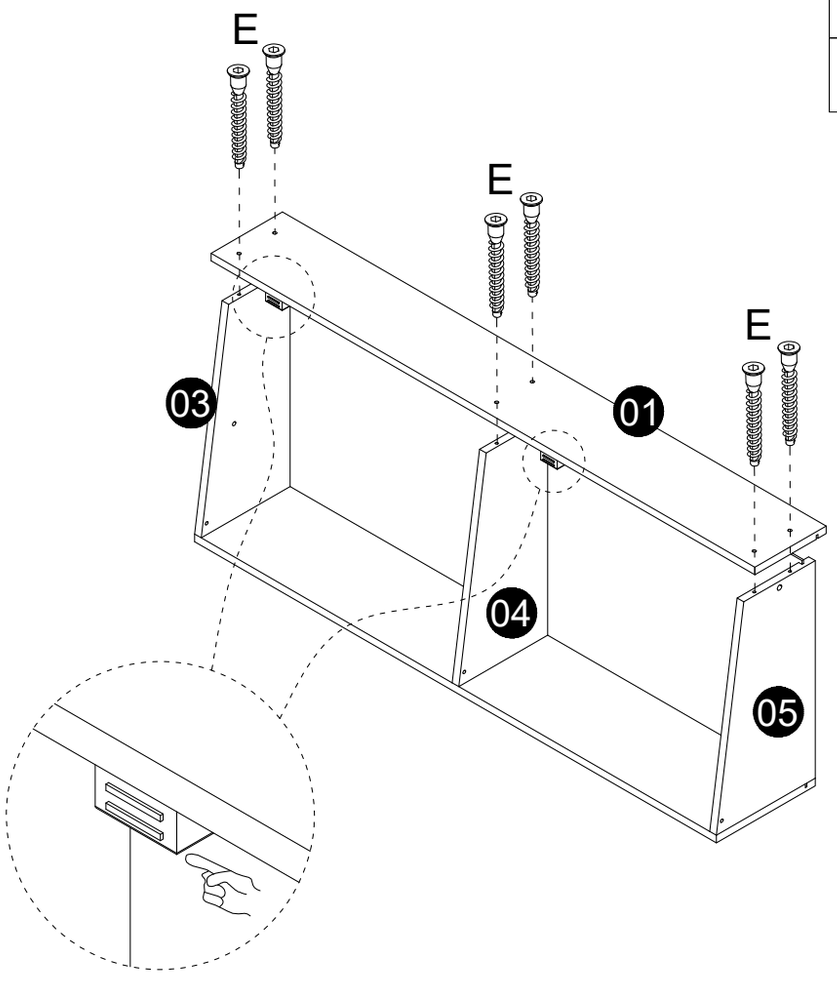

x2

6

e	M6	1pc	B	6*25mm	12pcs

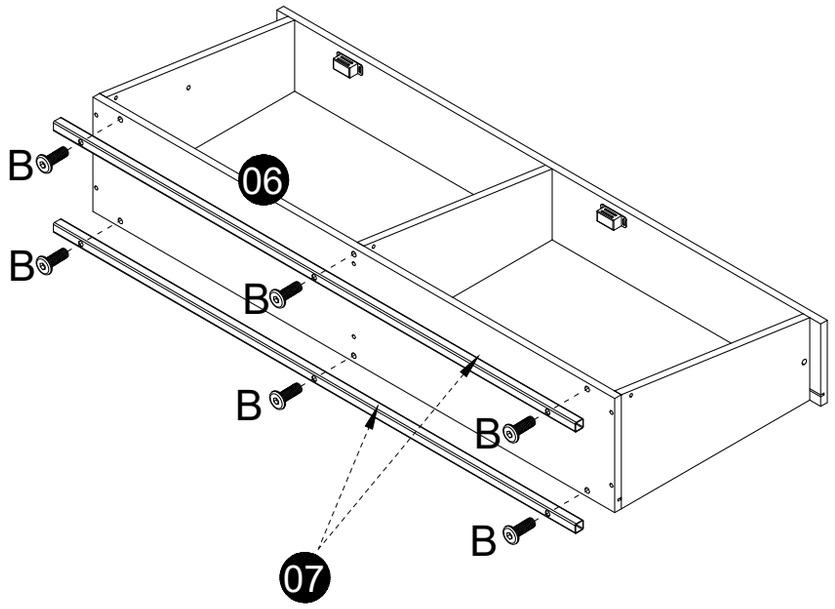

x2

7

A		6*28mm	4pcs
D		6*40mm	8pcs
e	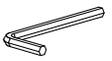	M6	1pc

x2

8

D		6*40mm	4pcs
e	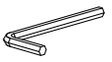	M6	1pc

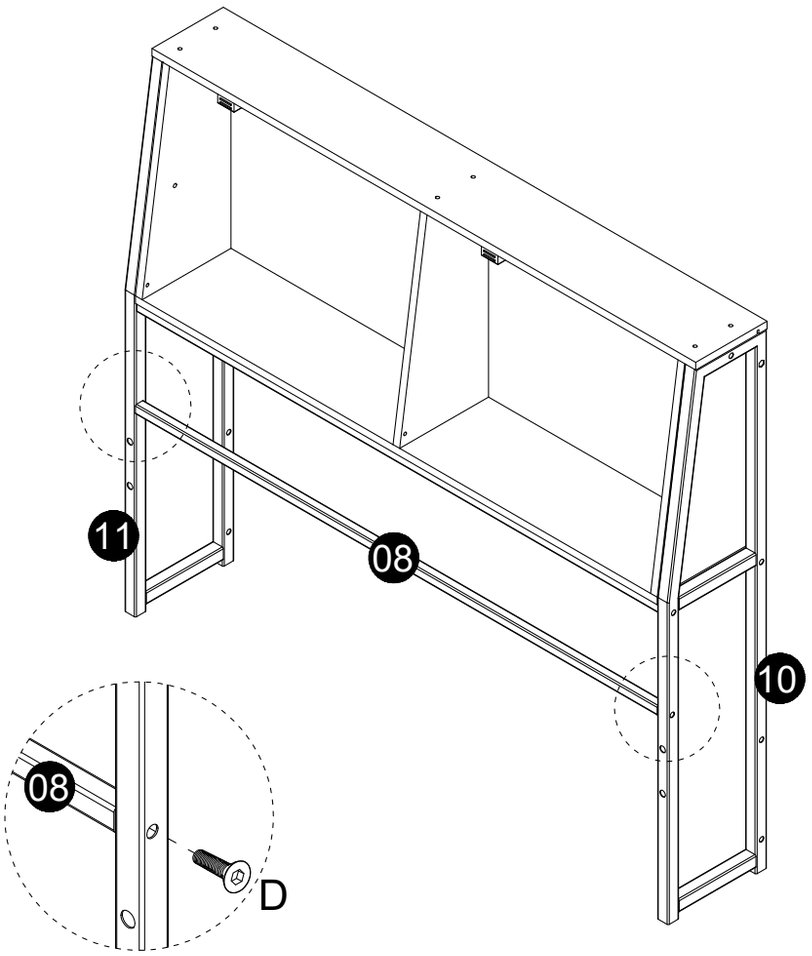

x2

9

V		8pcs

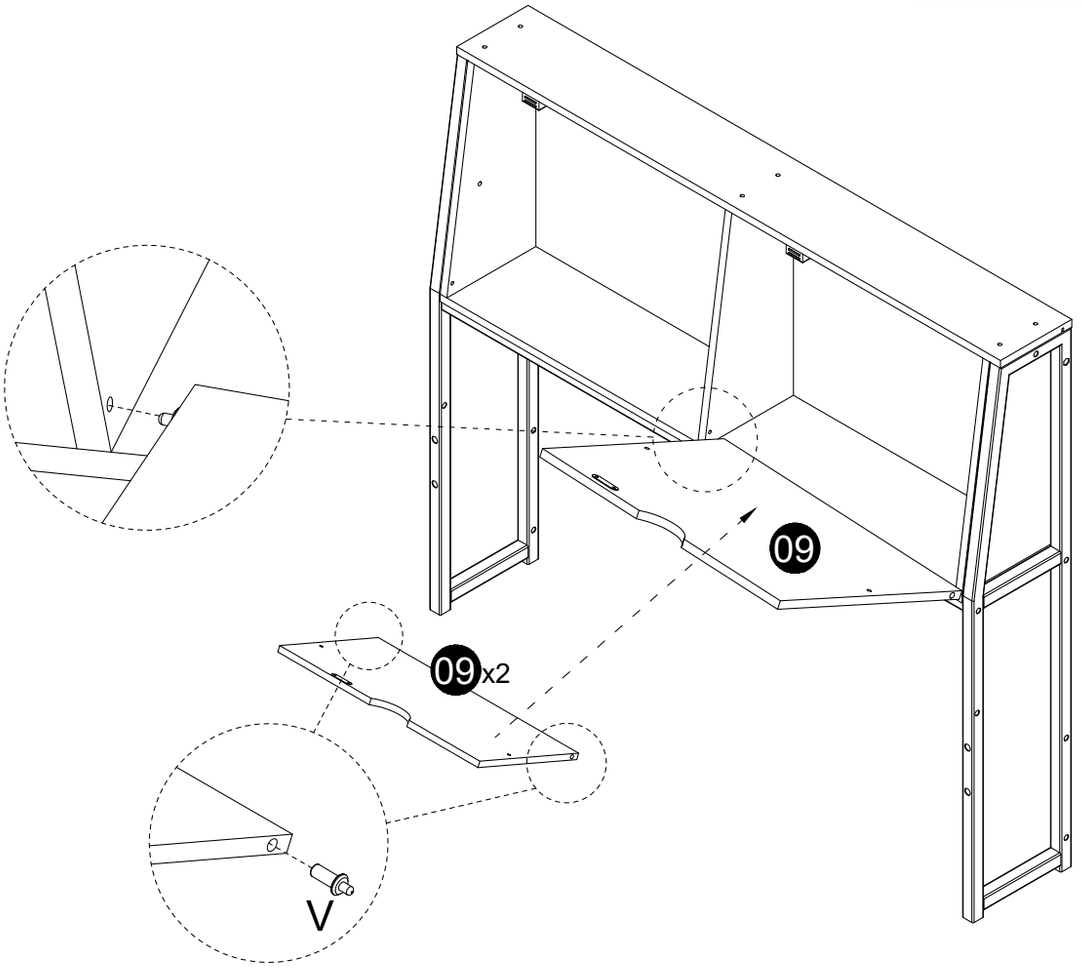

x2

10

H	 4*14mm	8pcs
X		4pcs
f	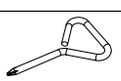	1pc

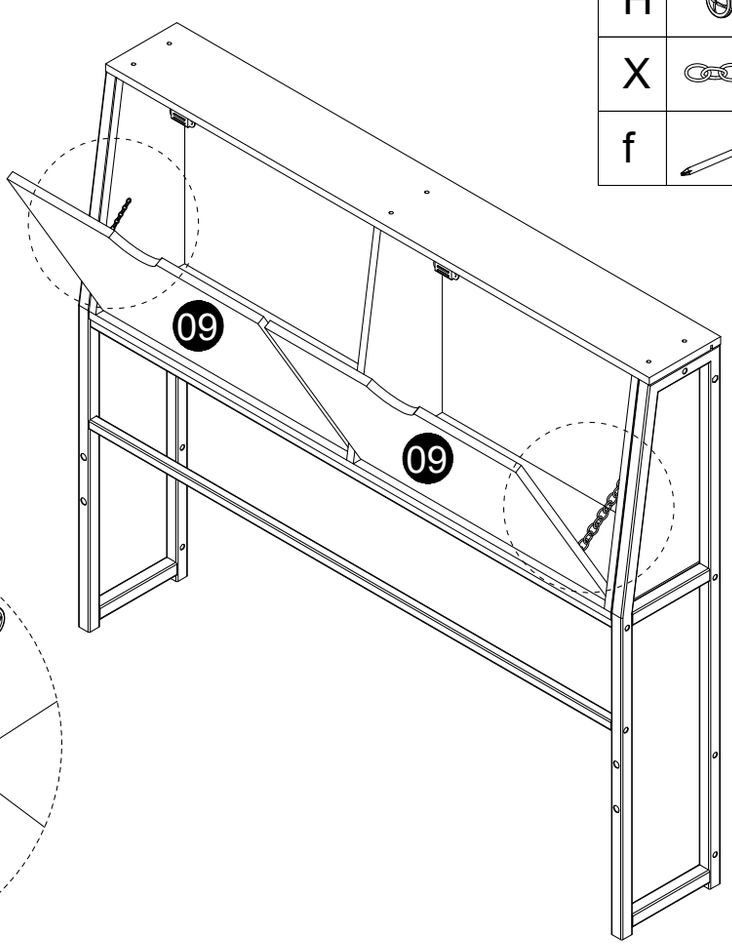

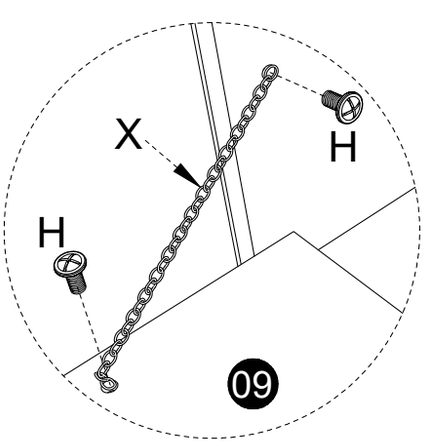

x2

11

B		6*25mm	8pcs
e		M6	1pc

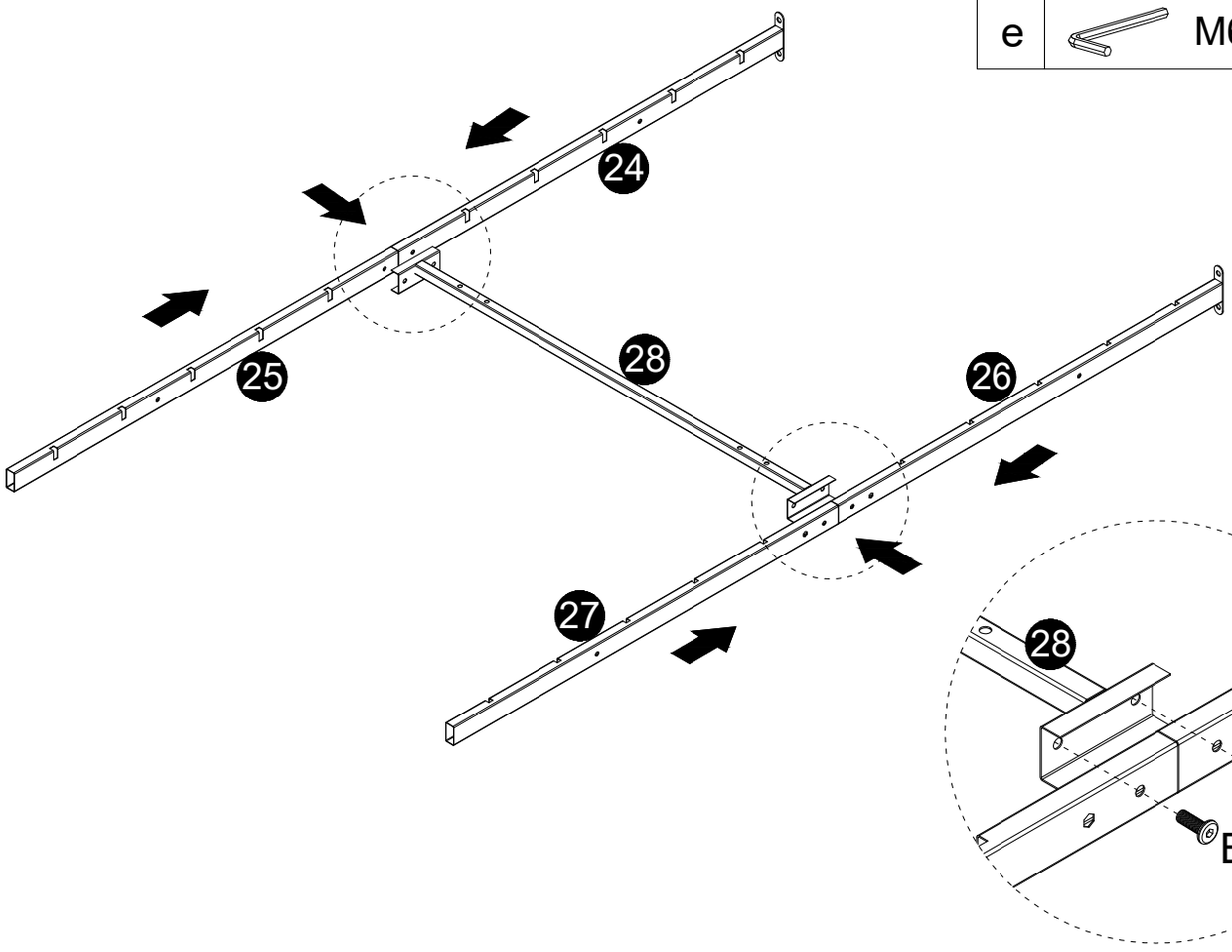

12

b		M8&M6	1pc	A		6*28mm	8pcs
e		M6	1pc	T		M6	8pcs
				P		23.5cm	4pcs

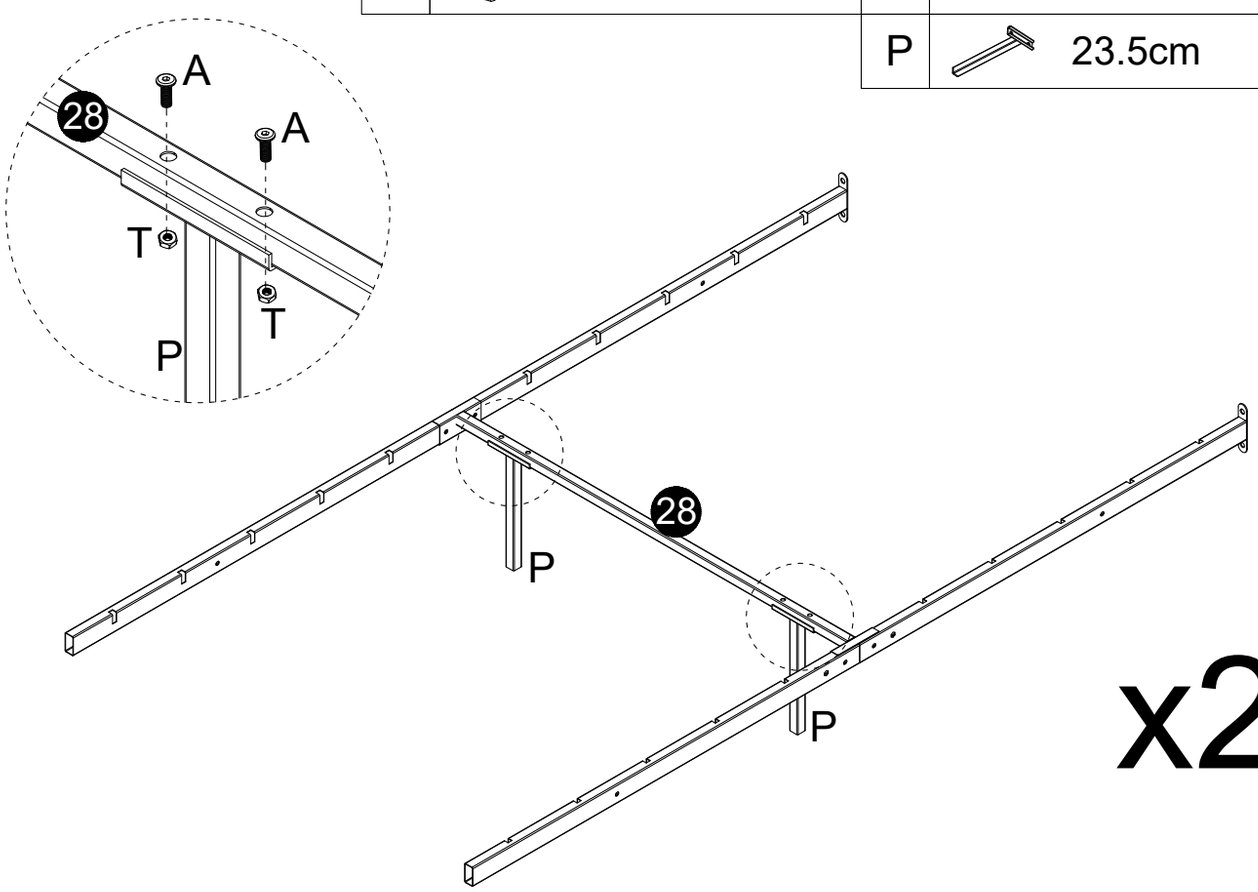

13

K		6*40mm	8pcs
e		M6	1pc

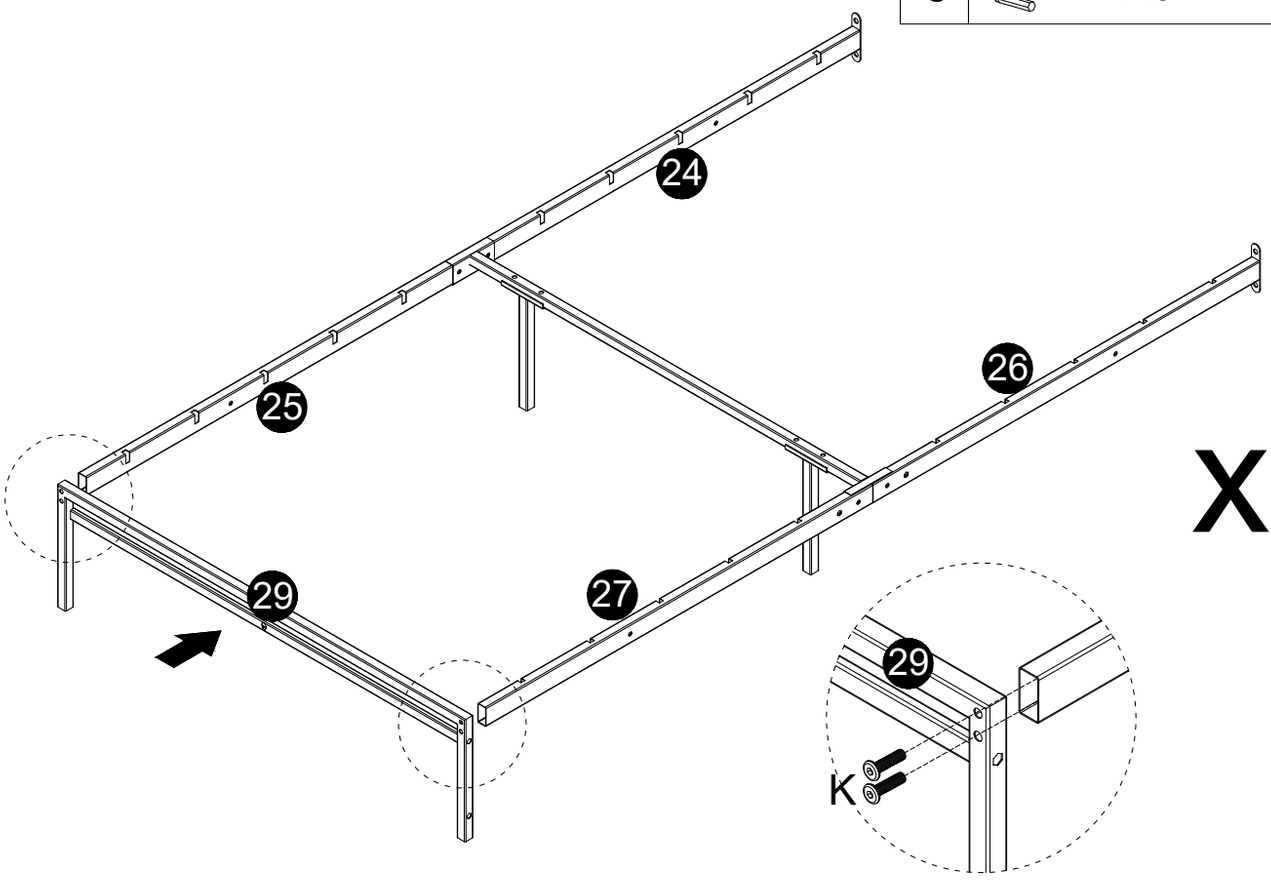

x2

14

b		M8&M6	1pc	J		8*35mm	8pcs
				S		M8	8pcs
				R		M8	8pcs
				d		M8	1pc

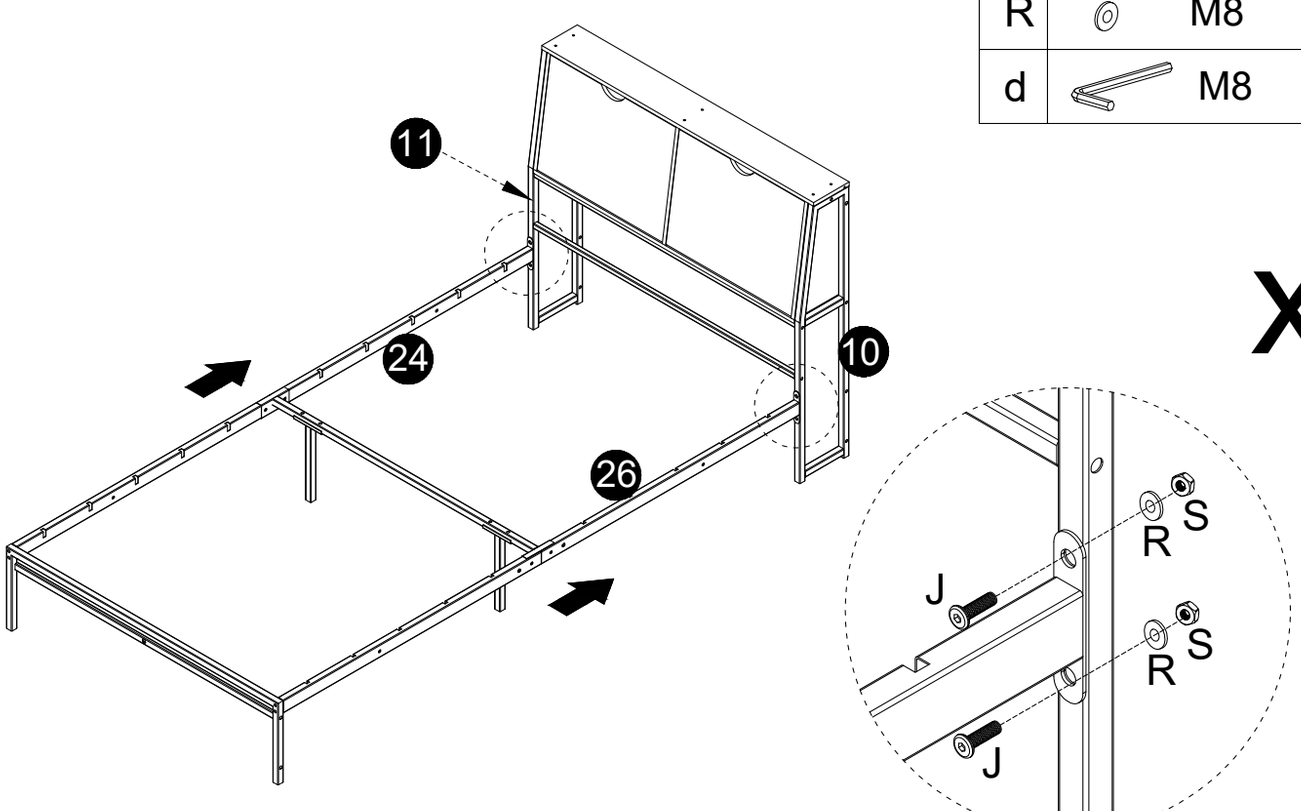

x2

15

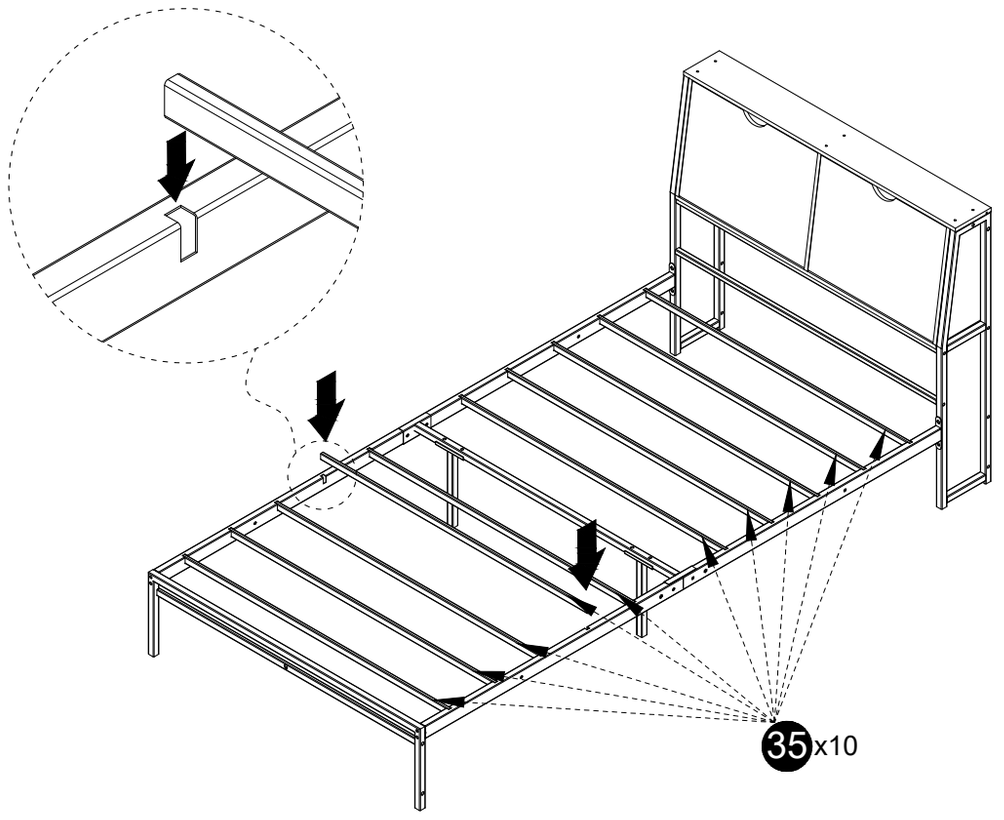

x2

16

E	5*40mm	6pcs
g	M4	1pc

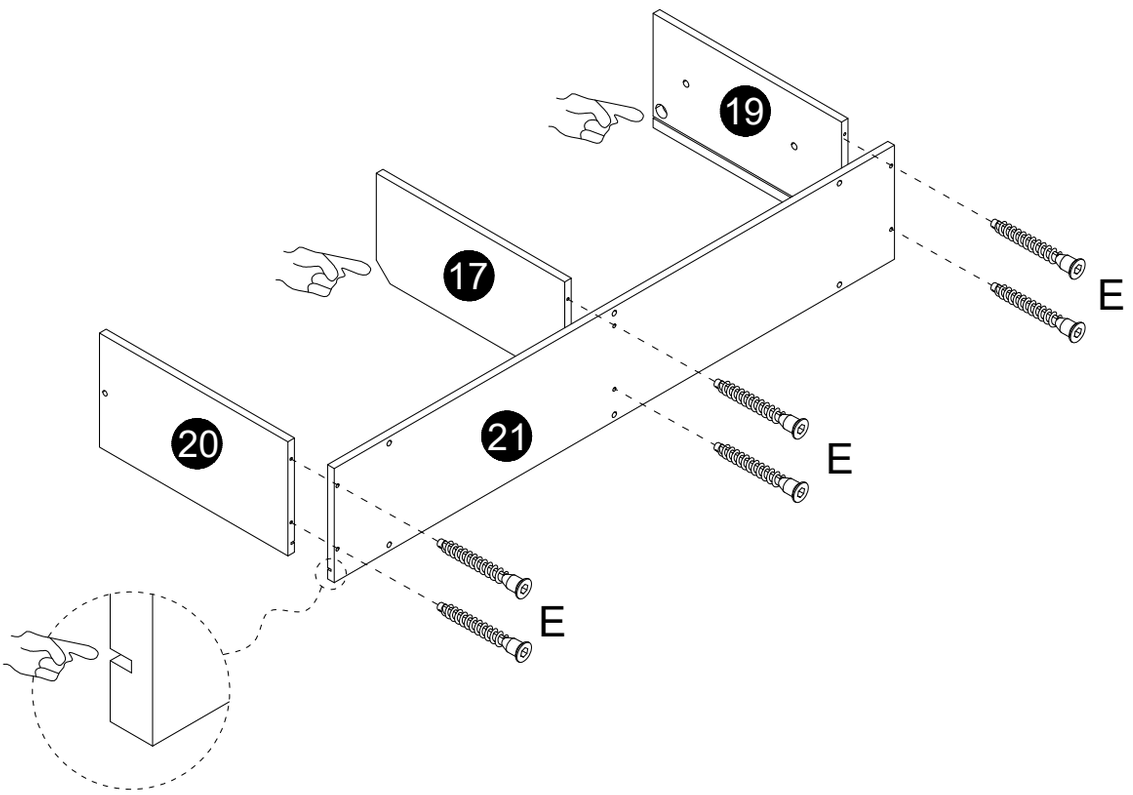

17

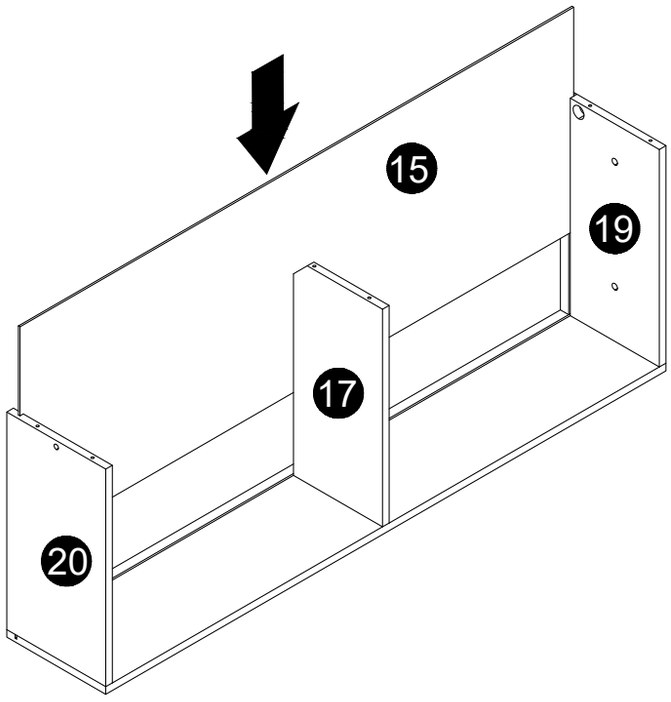

18

E	5*40mm	6pcs
g	M4	1pc

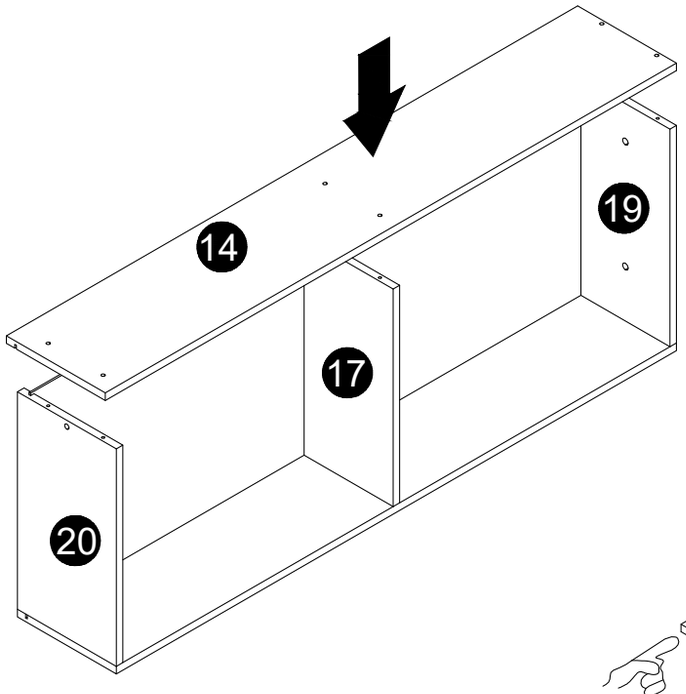

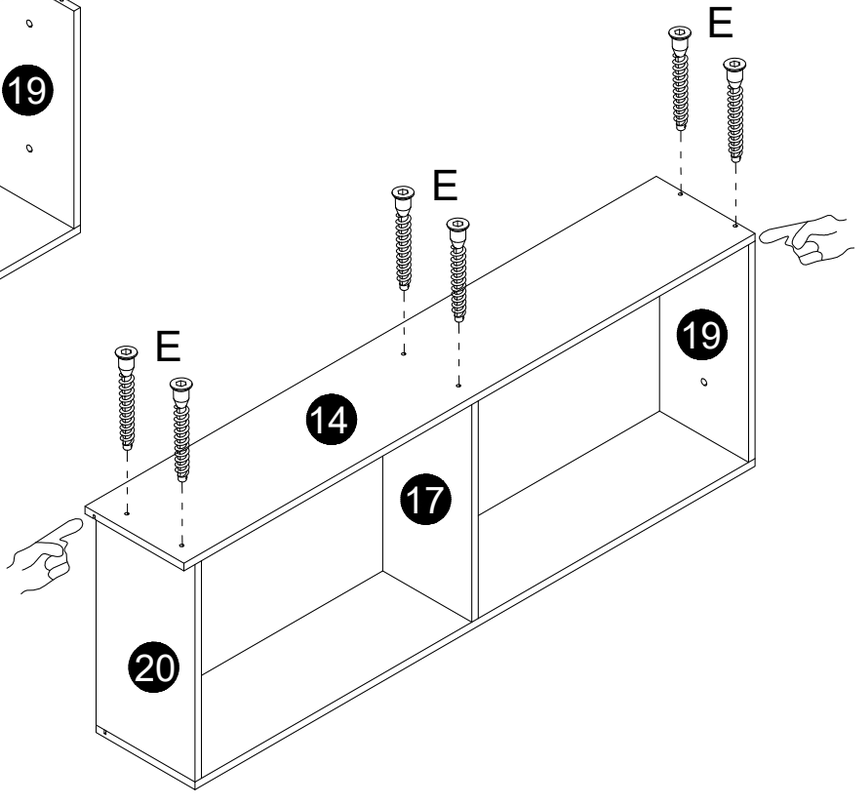

19

E	5*40mm	6pcs
g	M4	1pc

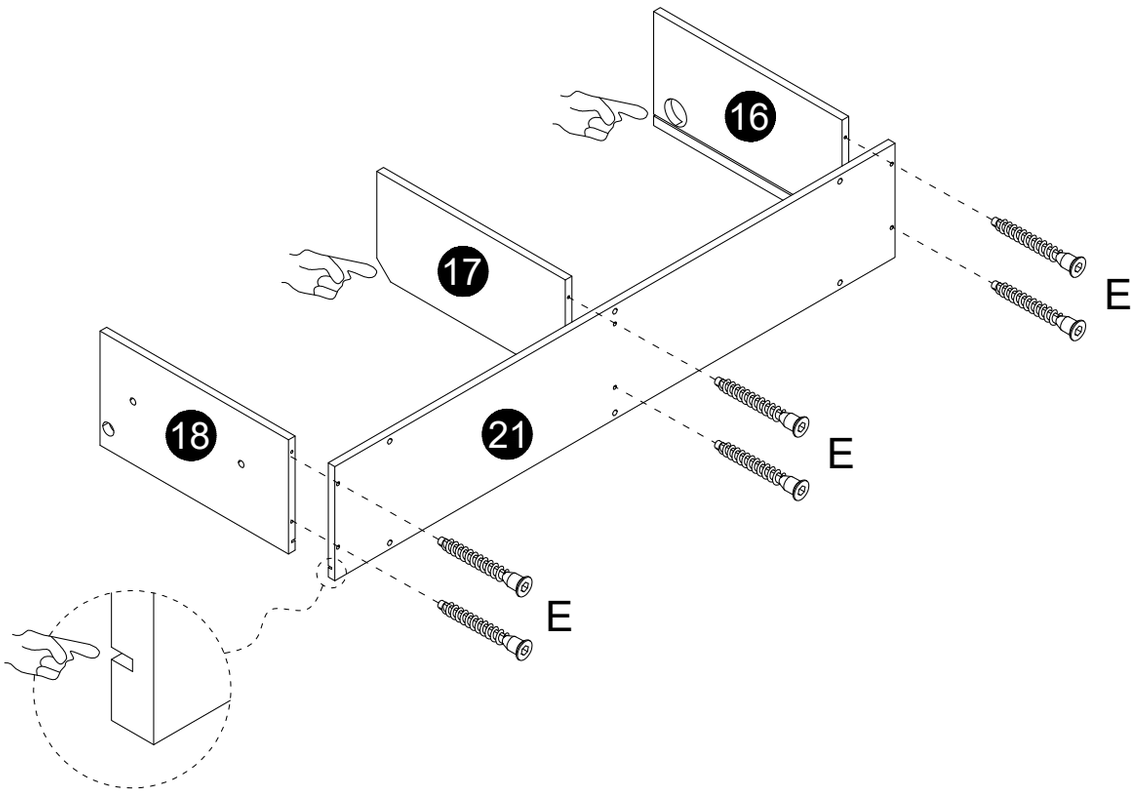

20

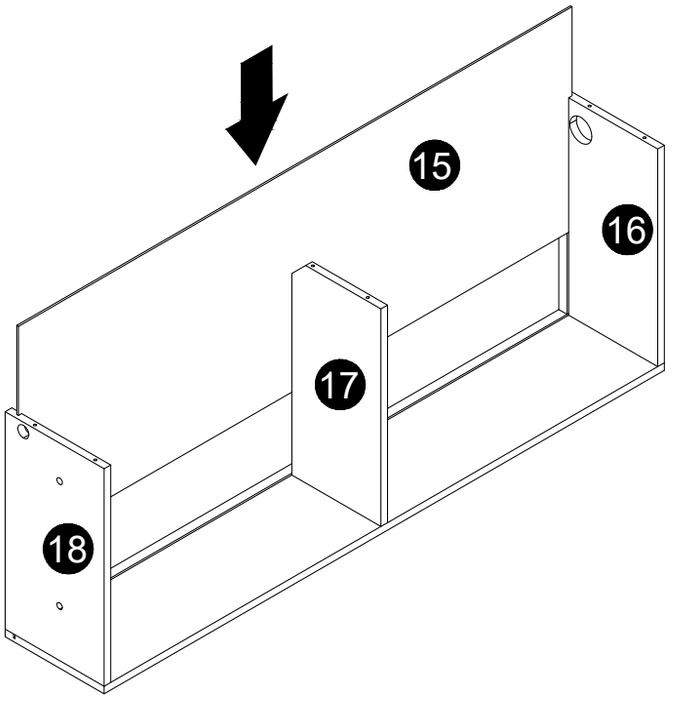

21

E	5*40mm	6pcs
g	M4	1pc

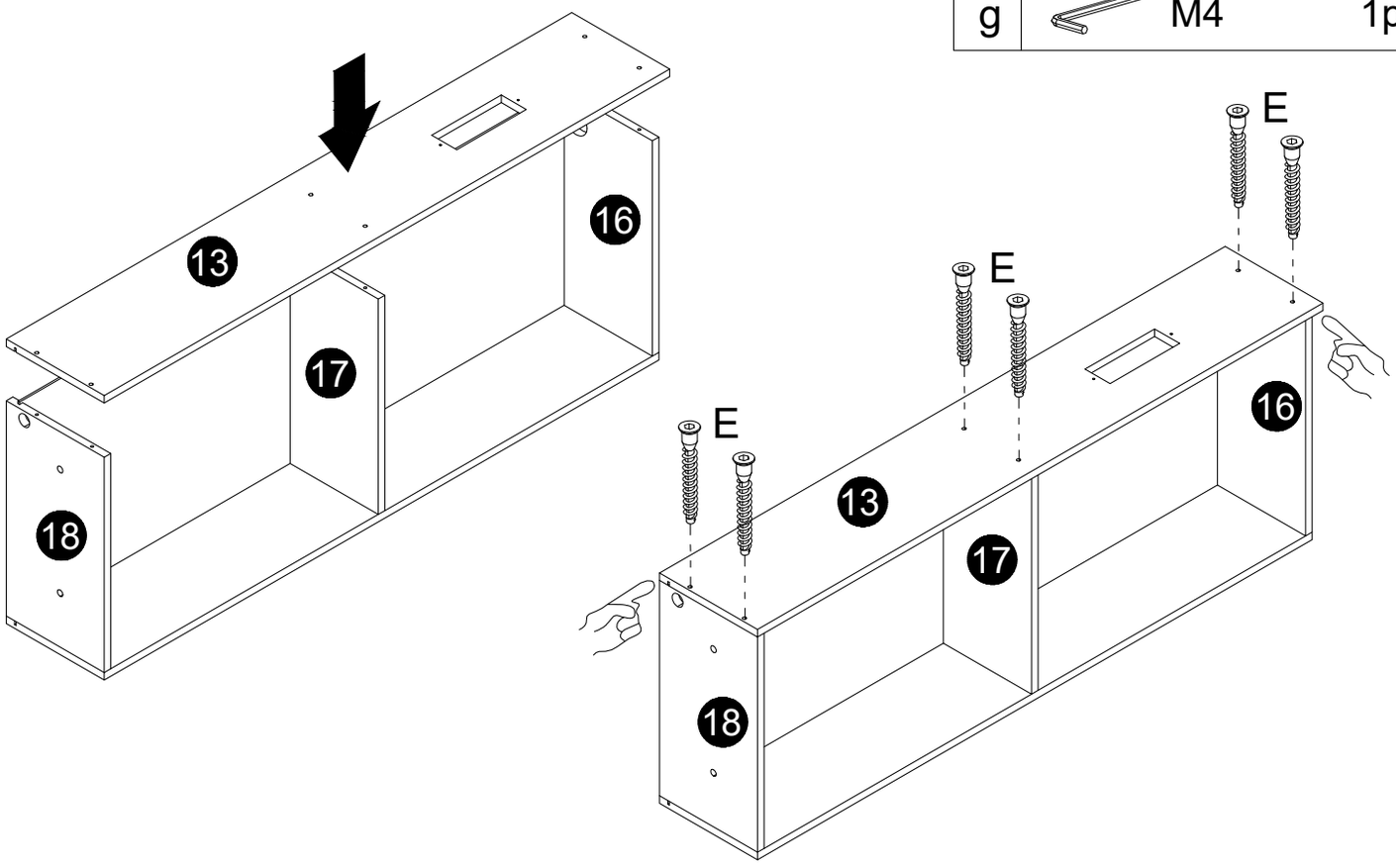

22

M	6*15mm	2pcs
N	6*15mm	2pcs
g	M4	1pc
e	M6	1pc

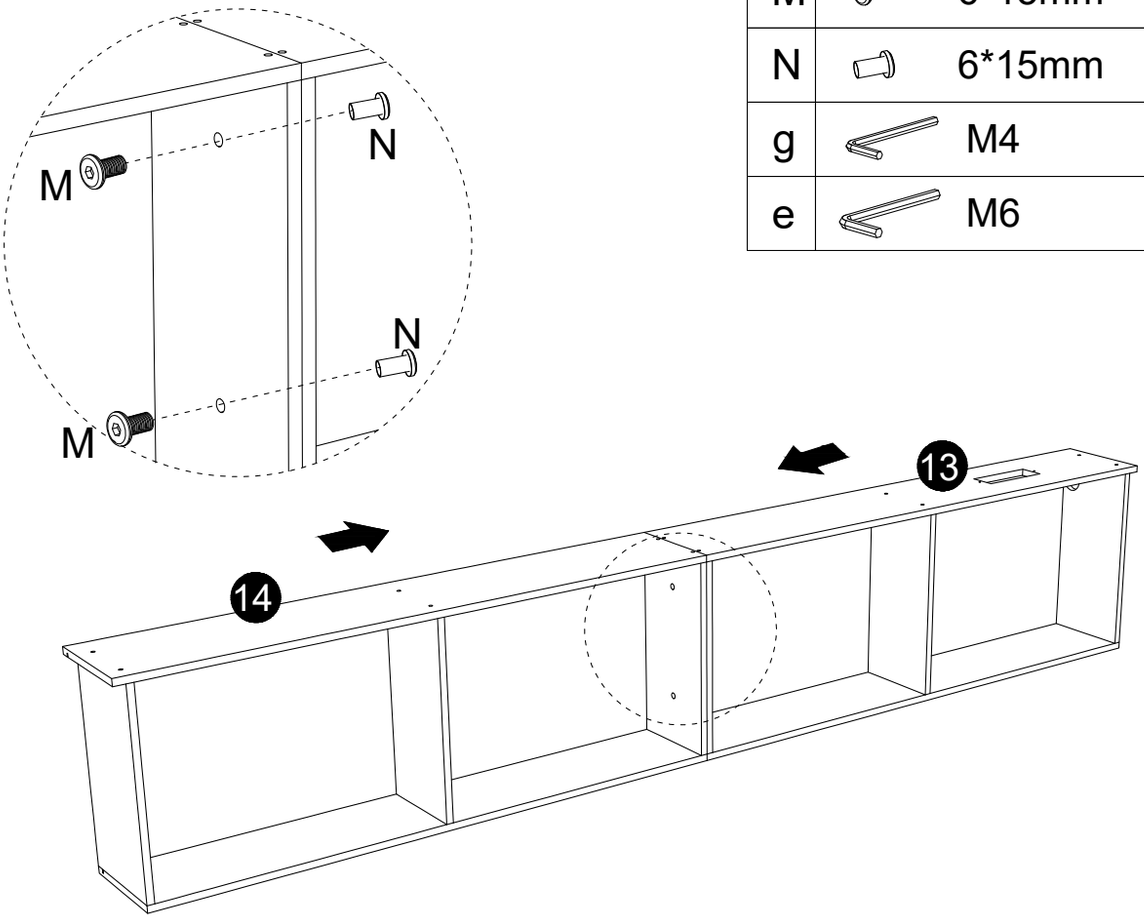

23

e	M6	1pc	L	6*60mm	2pcs
b	M8&M6	1pc	K	6*40mm	4pcs
			T	M6	2pcs

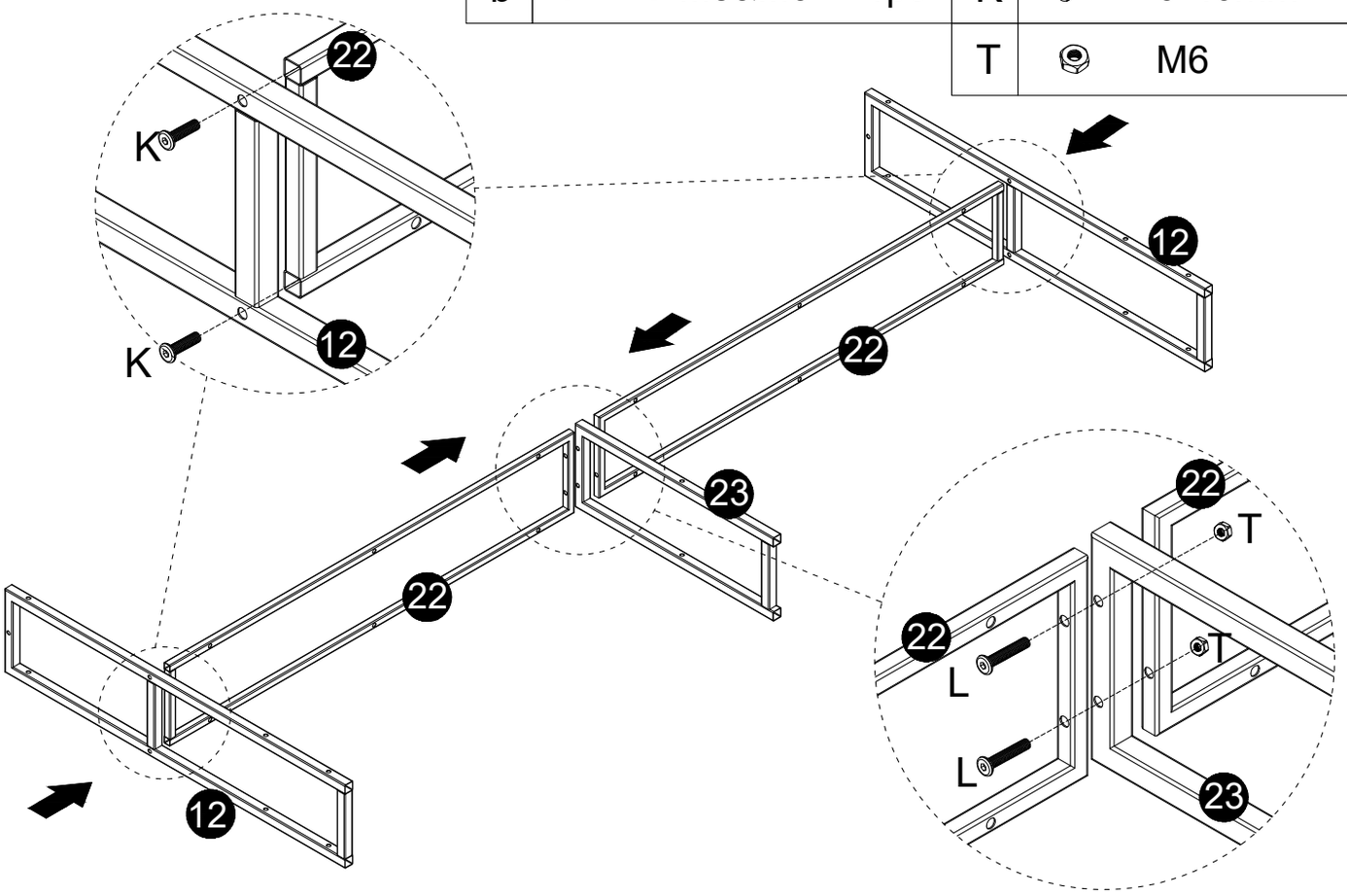

24

e	M6	1pc	B	6*25mm	12pcs

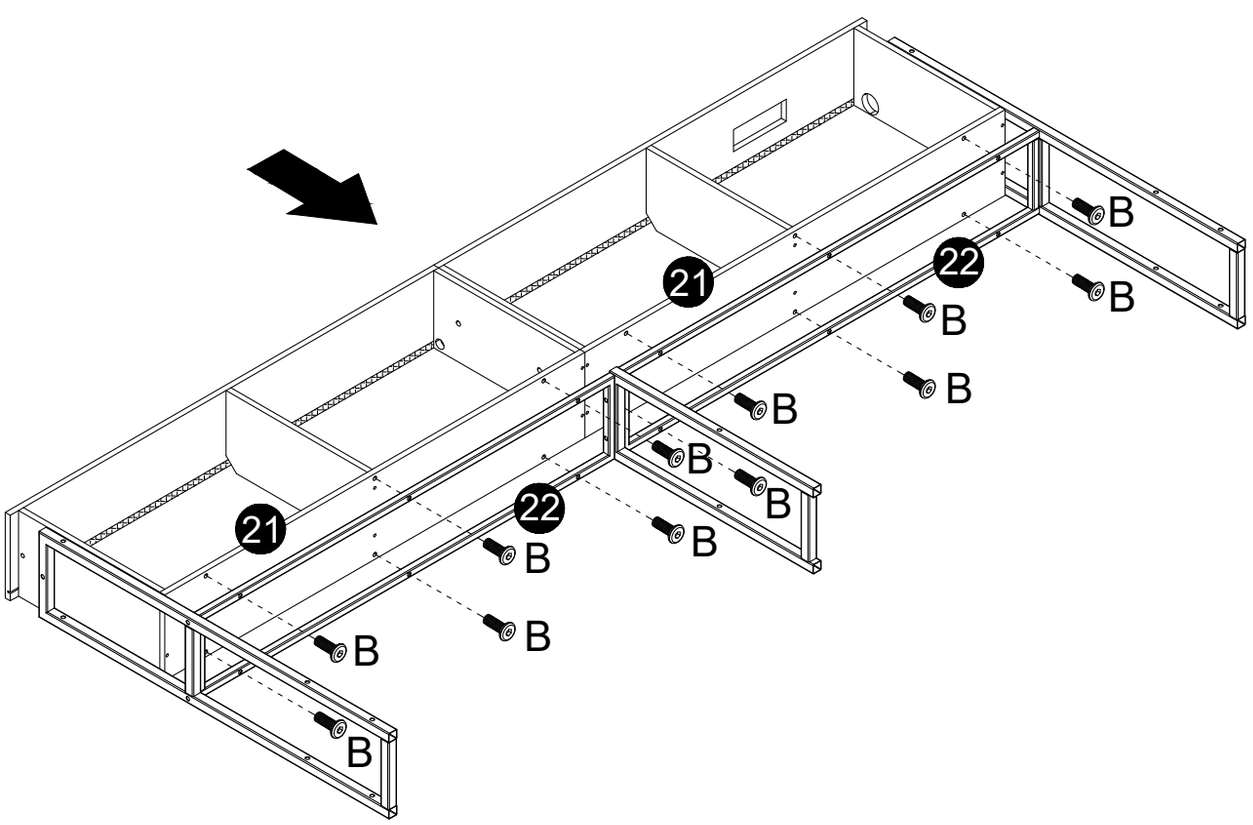

25

e	M6	1pc	A	6*28mm	2pcs
			Y		1pc

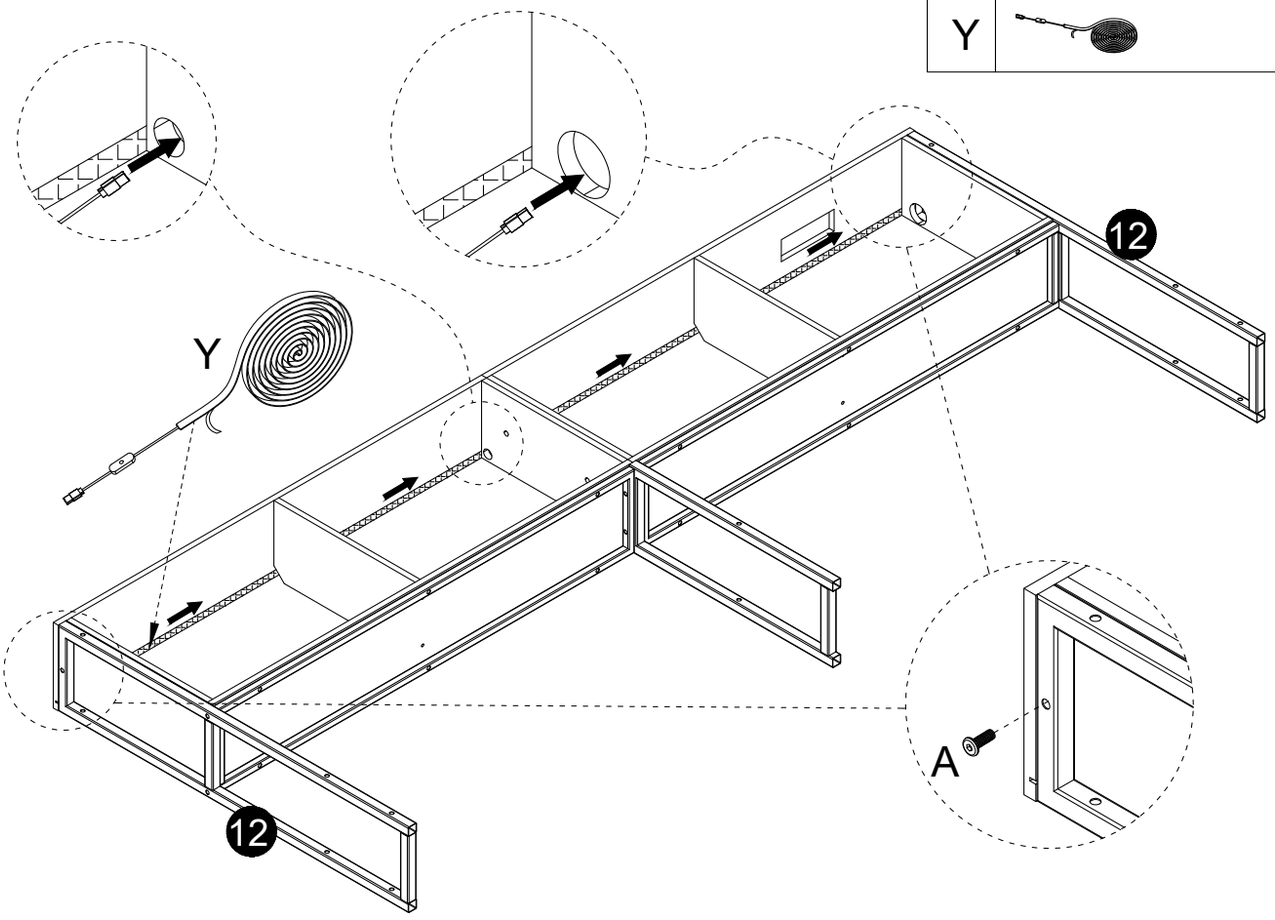

26

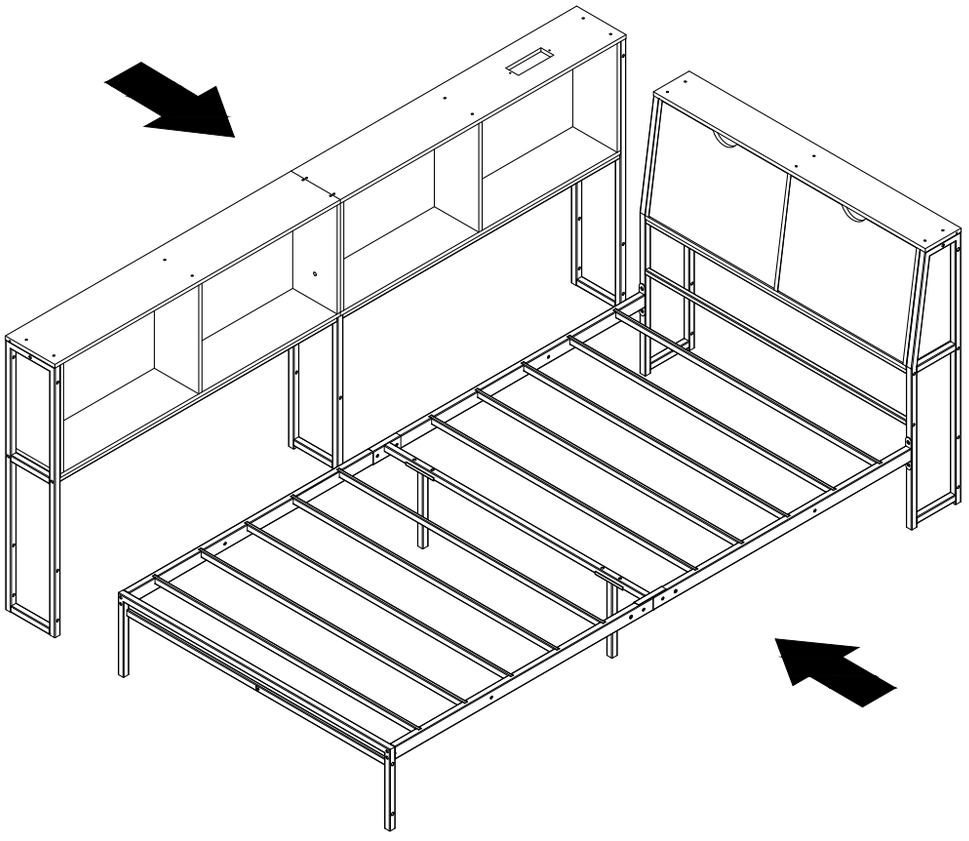

27

e	M6	1pc	A	6*28mm	1pc
b	M8&M6	1pc	C	6*50mm	2pcs
			T	M6	2pcs

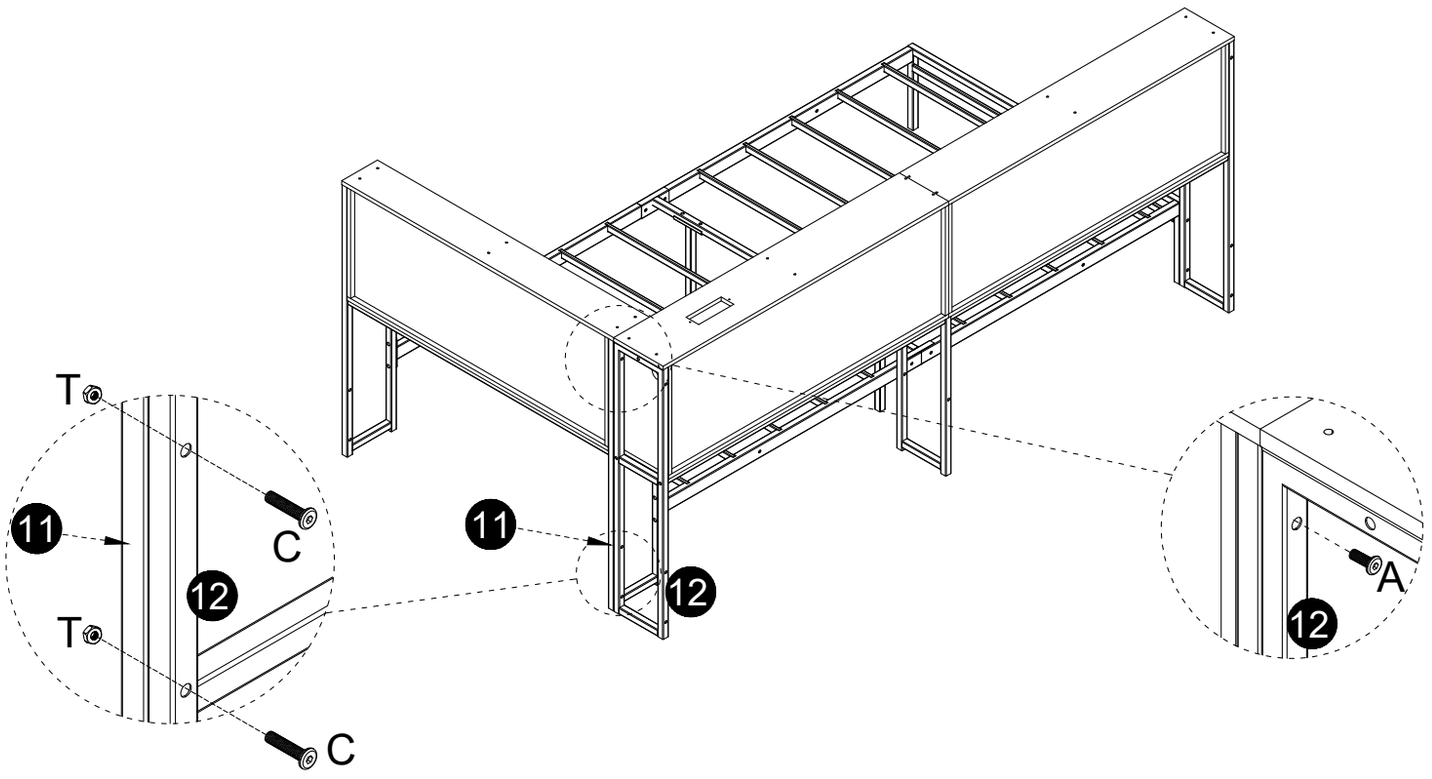

28

e	M6	1pc	A	6*28mm	3pcs

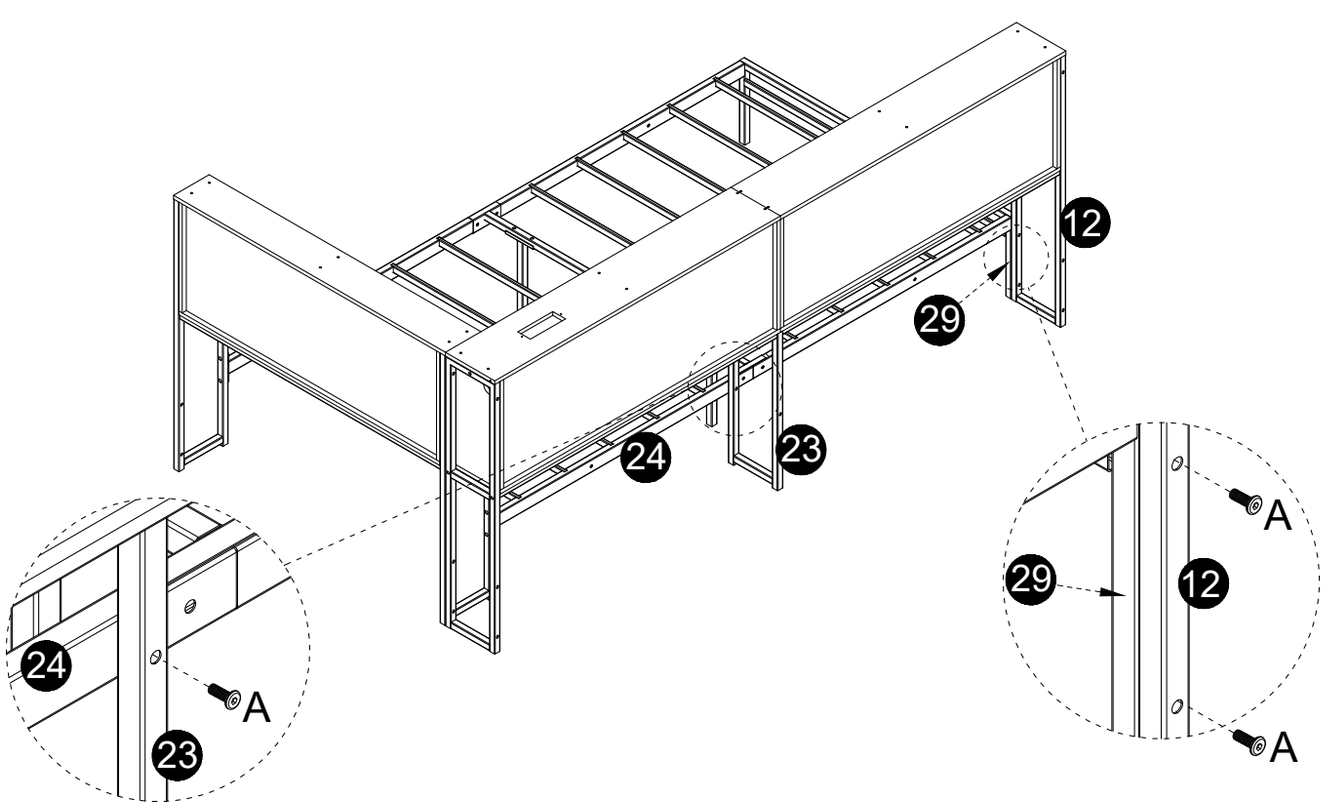

29

G		4*10mm	2pcs
Z	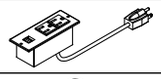		1pc
f	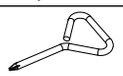		1pc

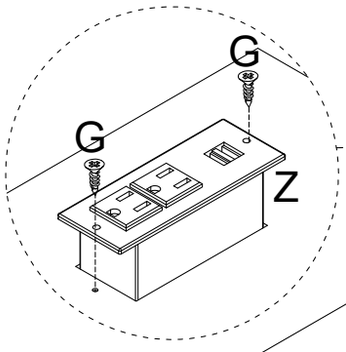

30

F		4*28mm	16pcs
Q		M4	16pcs
f	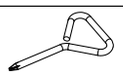		1pc
c		M4	1pc

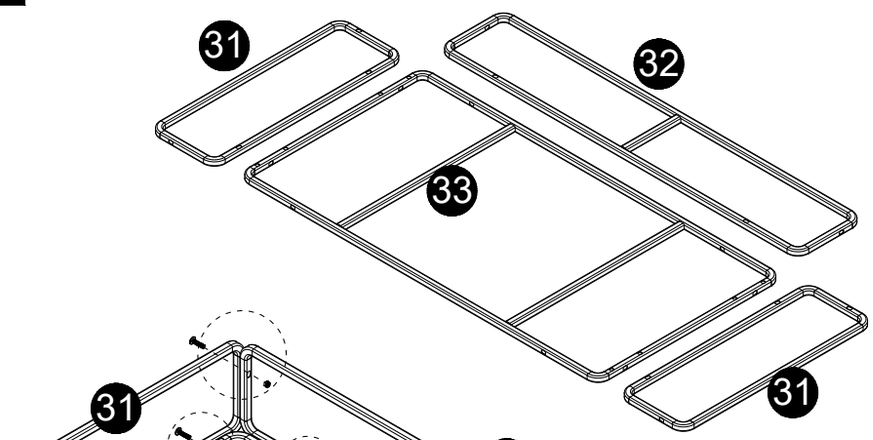

x2

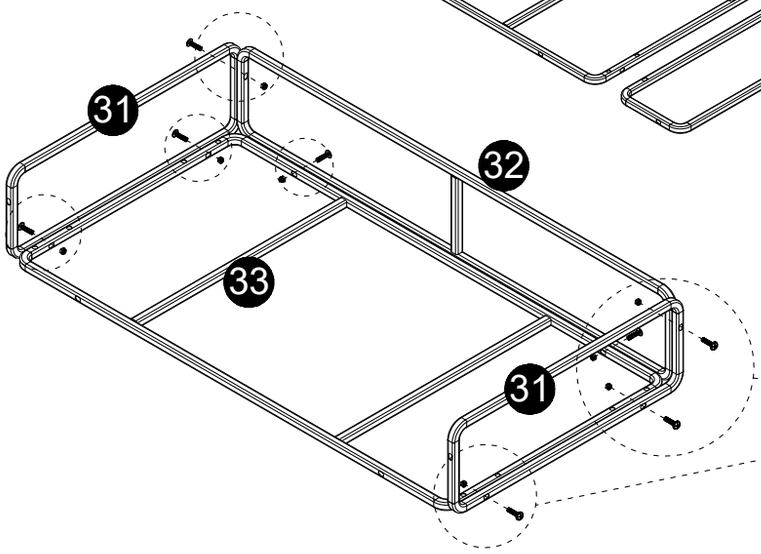

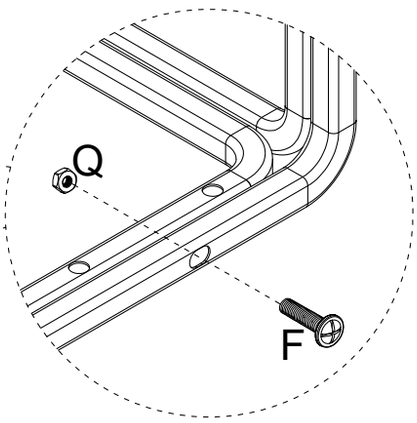

31

F		4*28mm	16pcs
Q		M4	16pcs
U		1.0	8pcs
f	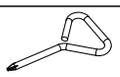		1pc
c		M4	1pc

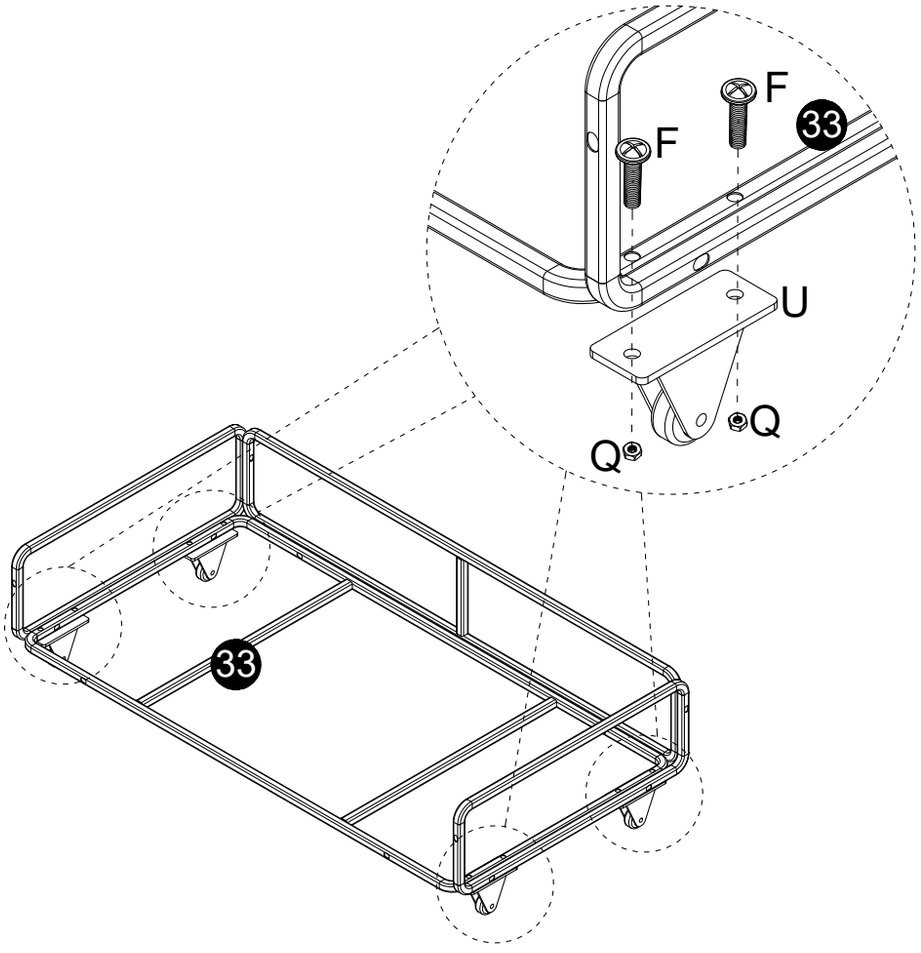

x2

32

I		4*18mm	8pcs
f			1pc

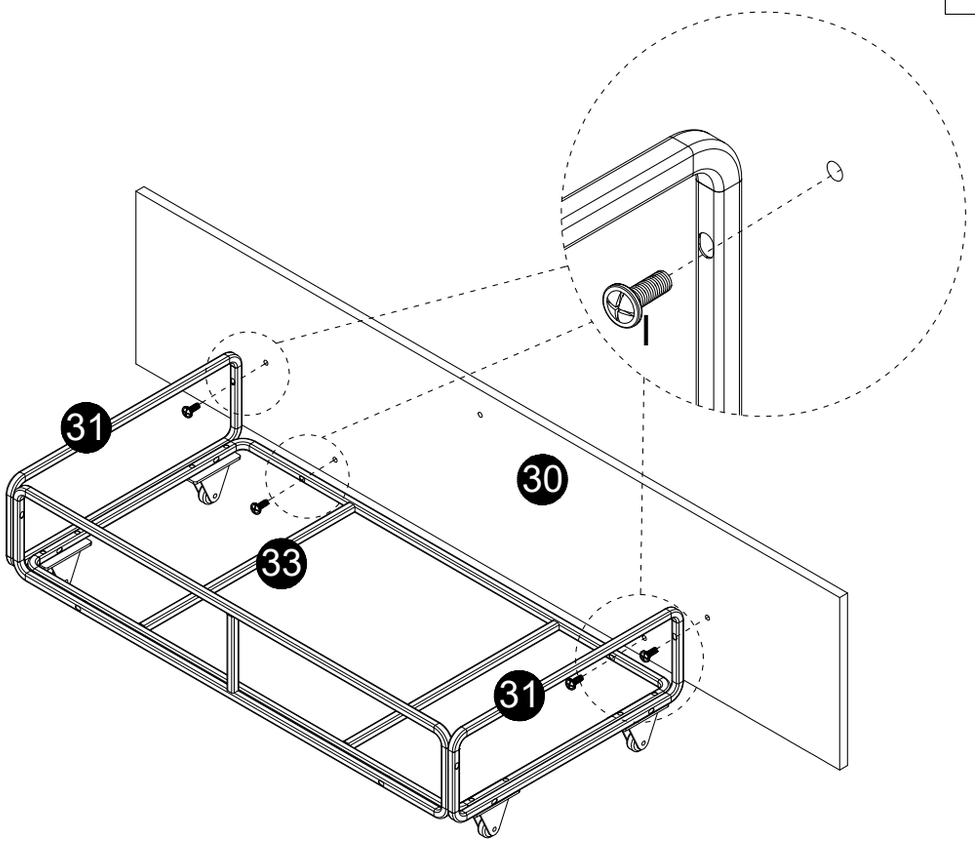

x2

33

O	4*11mm	2pcs
g	M4	1pc

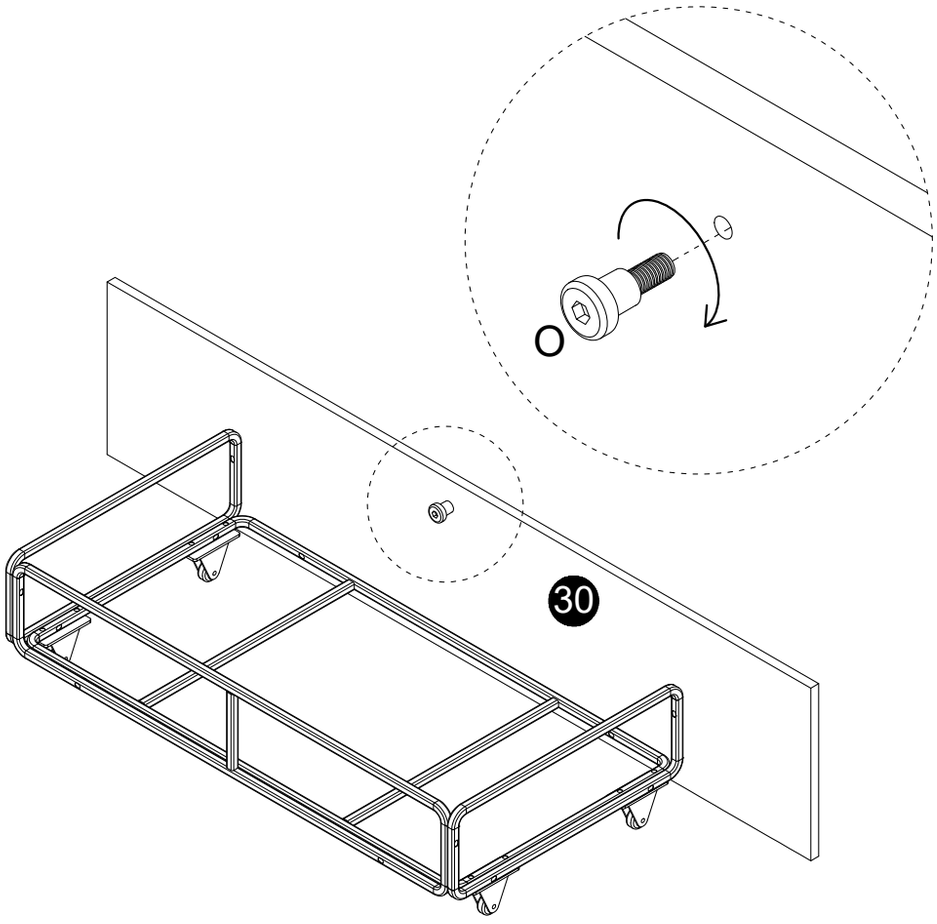

x2

34

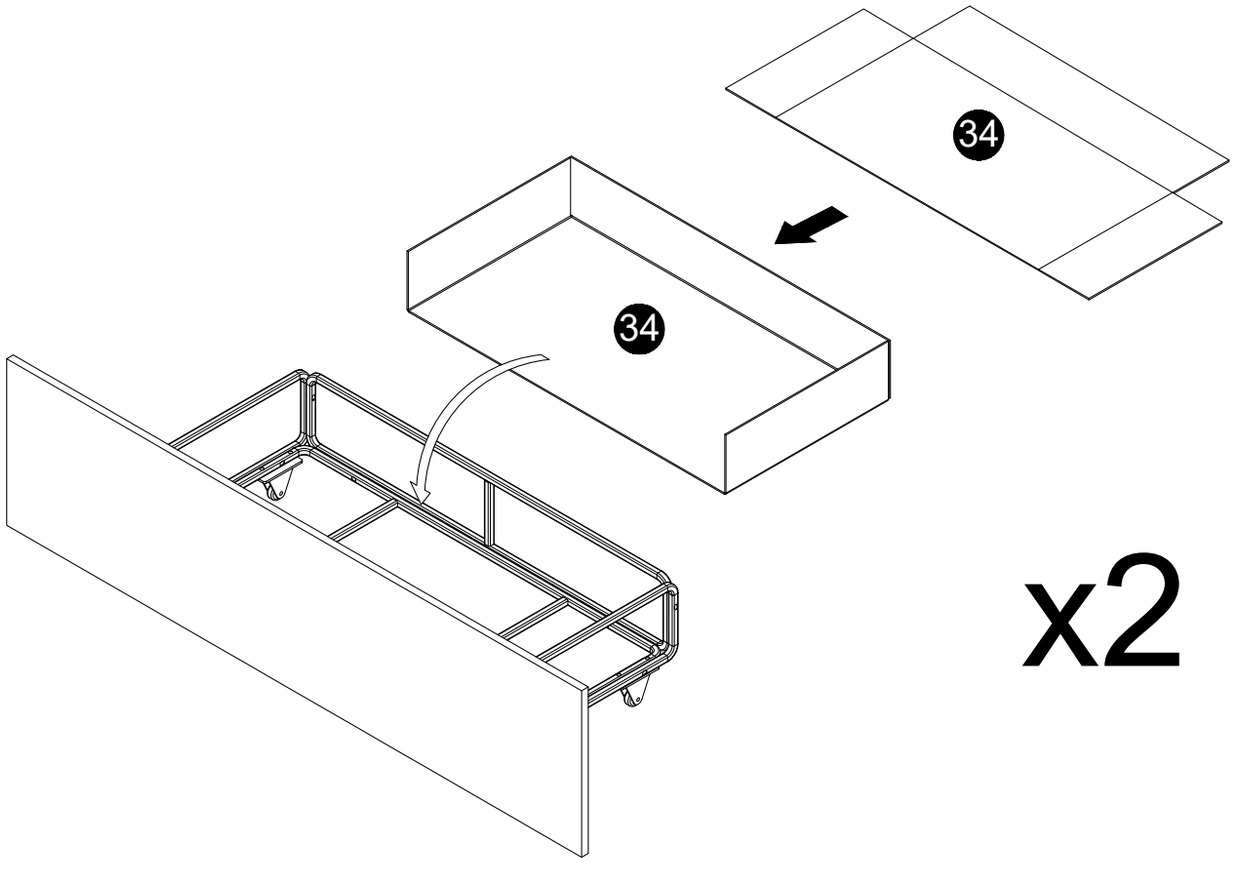

x2

35

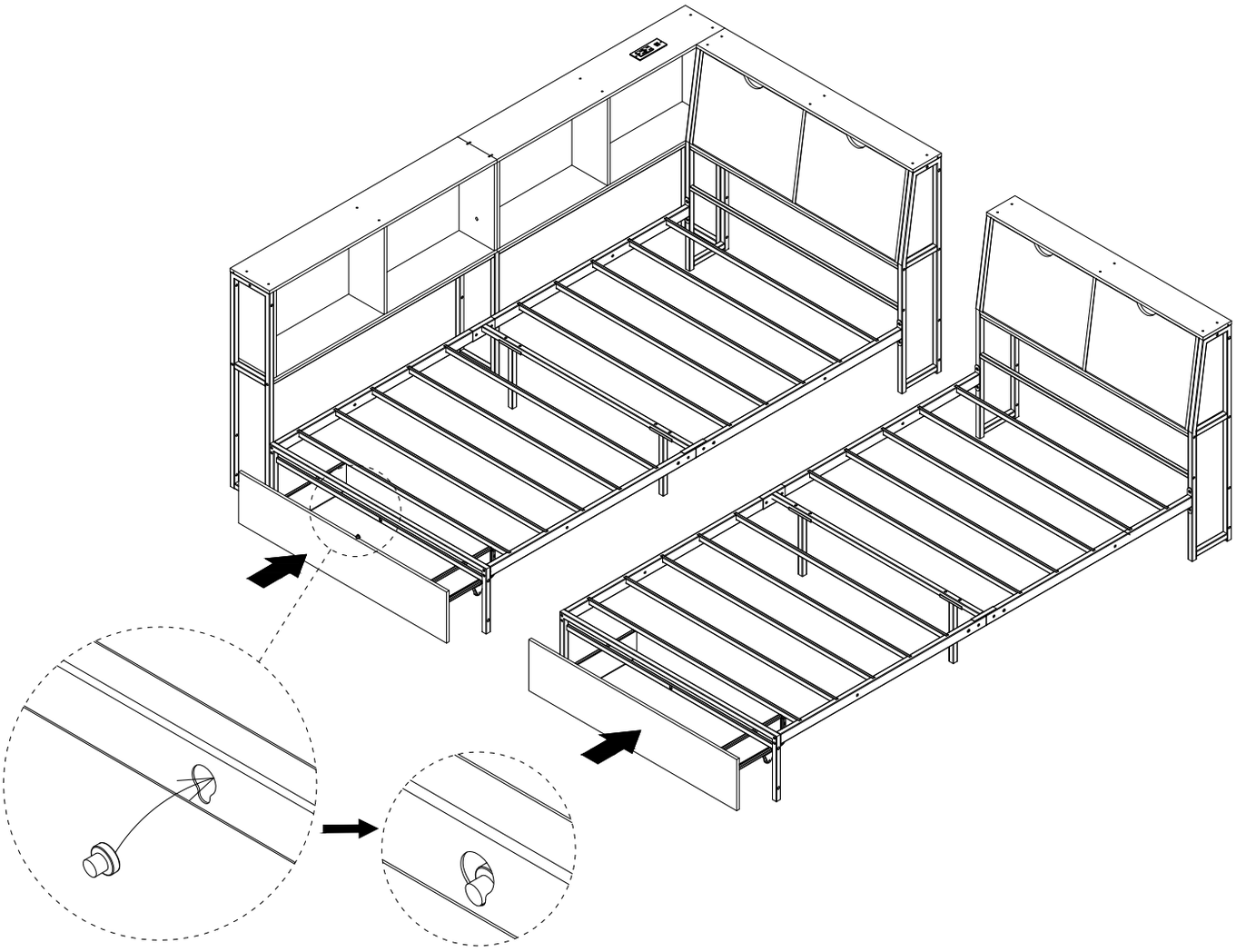

36

