Installation Manual

TKM14

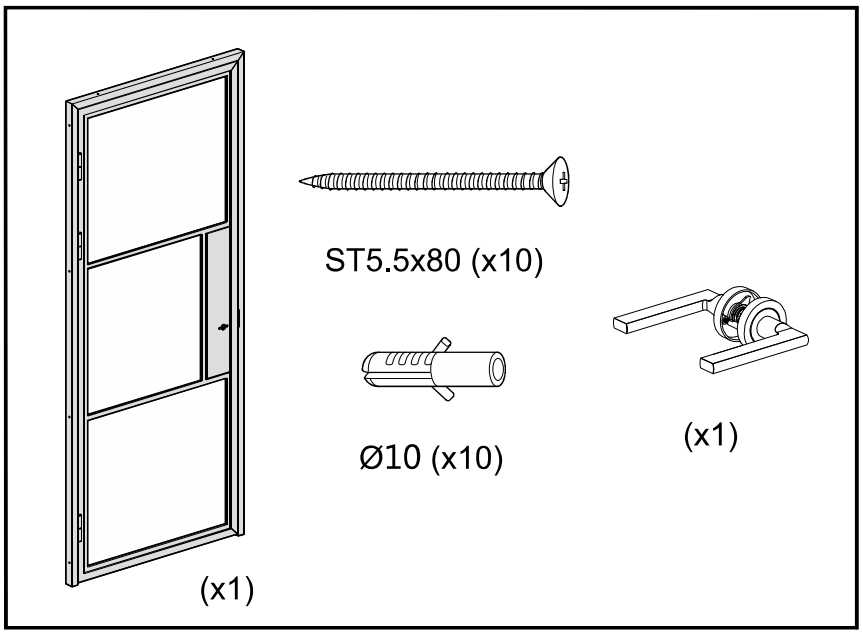

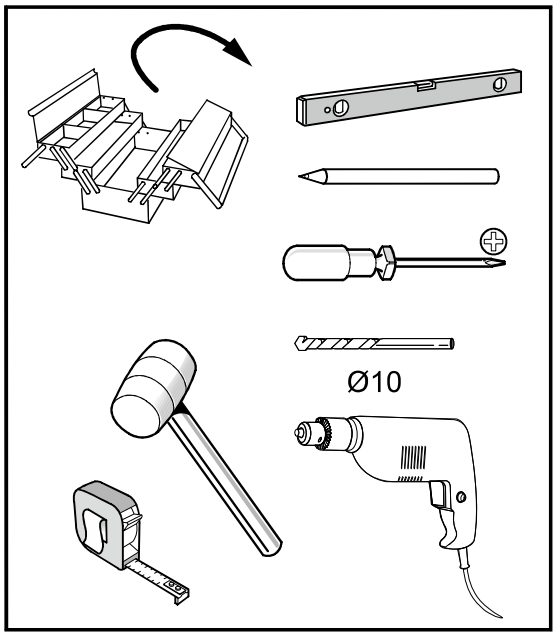

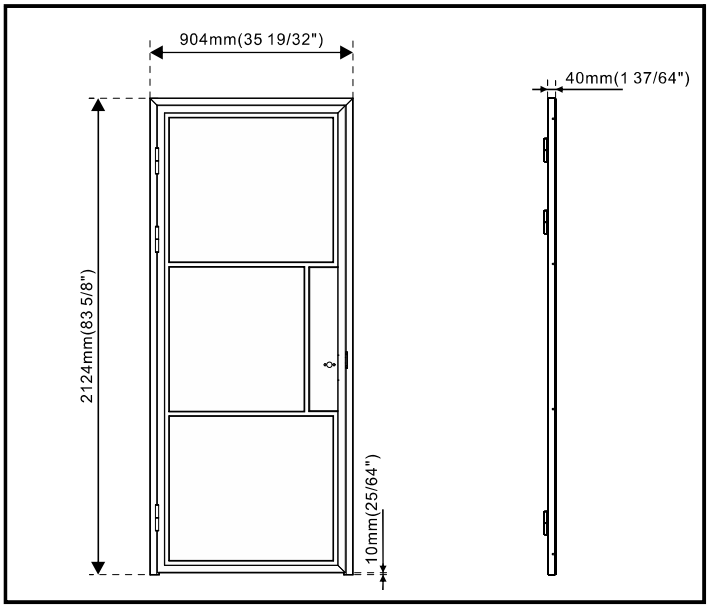

1

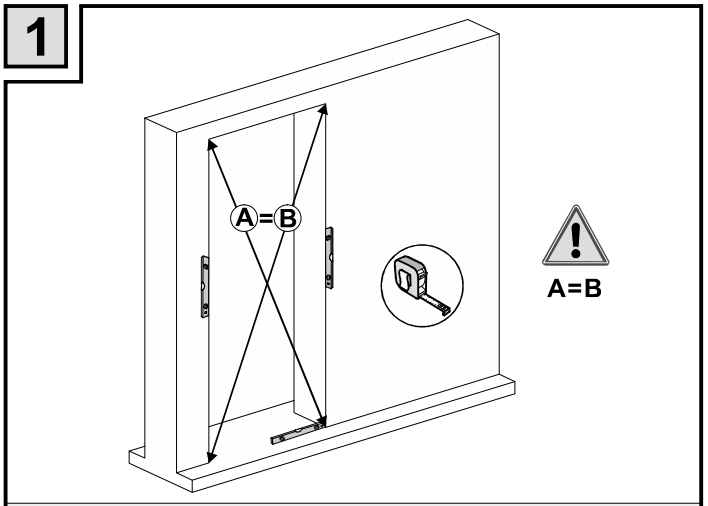

Confirm door opening size and diagonal size.
The door opening should be about
13/64''-25/64''(5mm-10mm) wider and higher than the door.

2

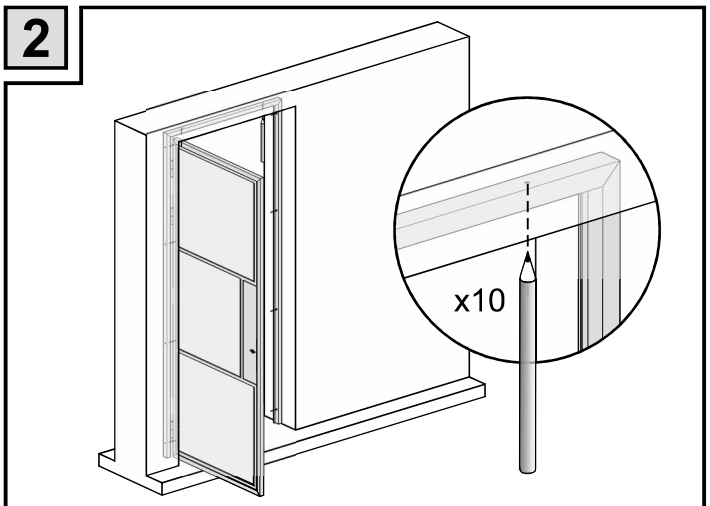

Use the door for punching and positioning,
and make positioning marks.

3

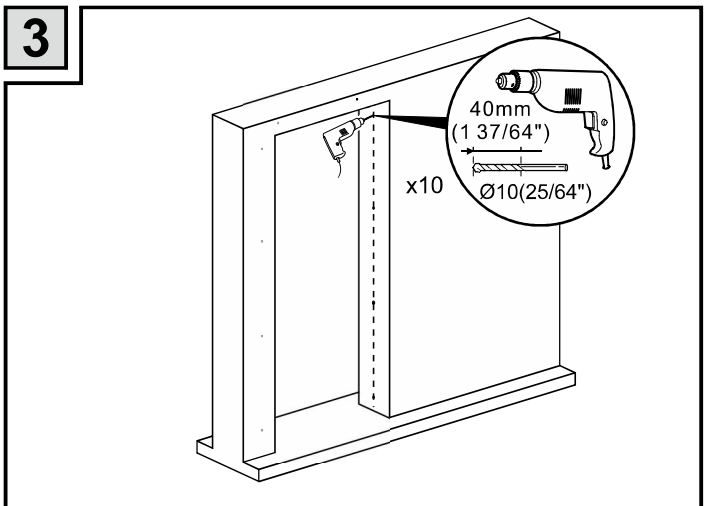

Selection φ 25/64''(10mm) drill for drilling,
with a depth of 1 3/5''(40mm)

4

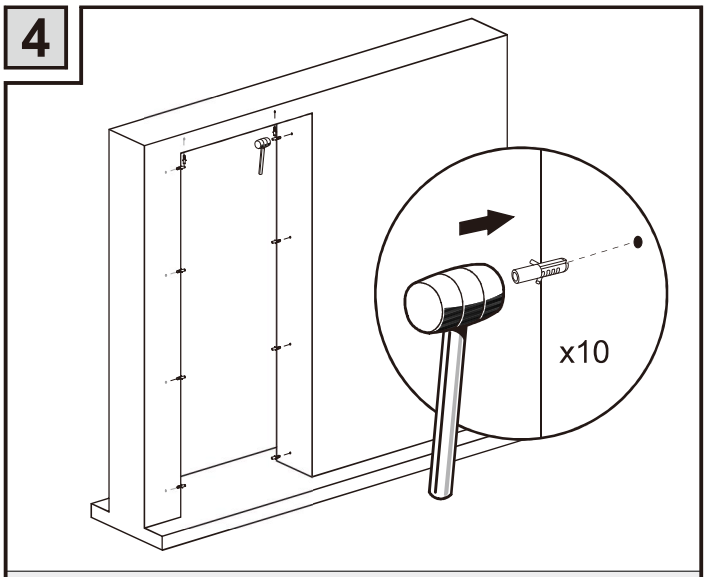

Install the 10 plastic expansion screws

5

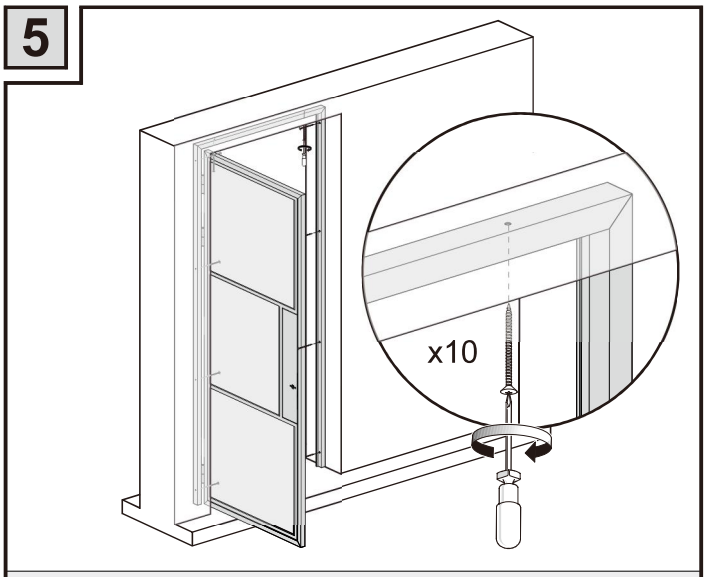

Mount the 10 screws and tighten them

6

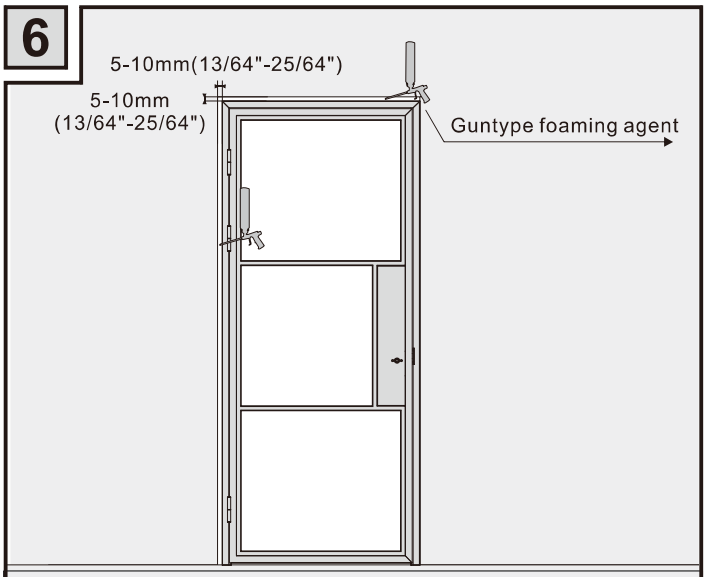

Fill the gaps by guntype foaming agent(not included)

7

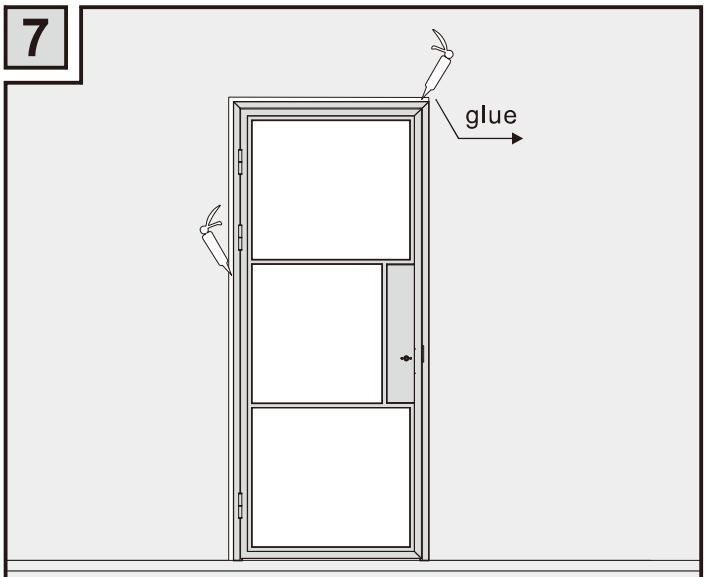

Apply sealant(not included)

8

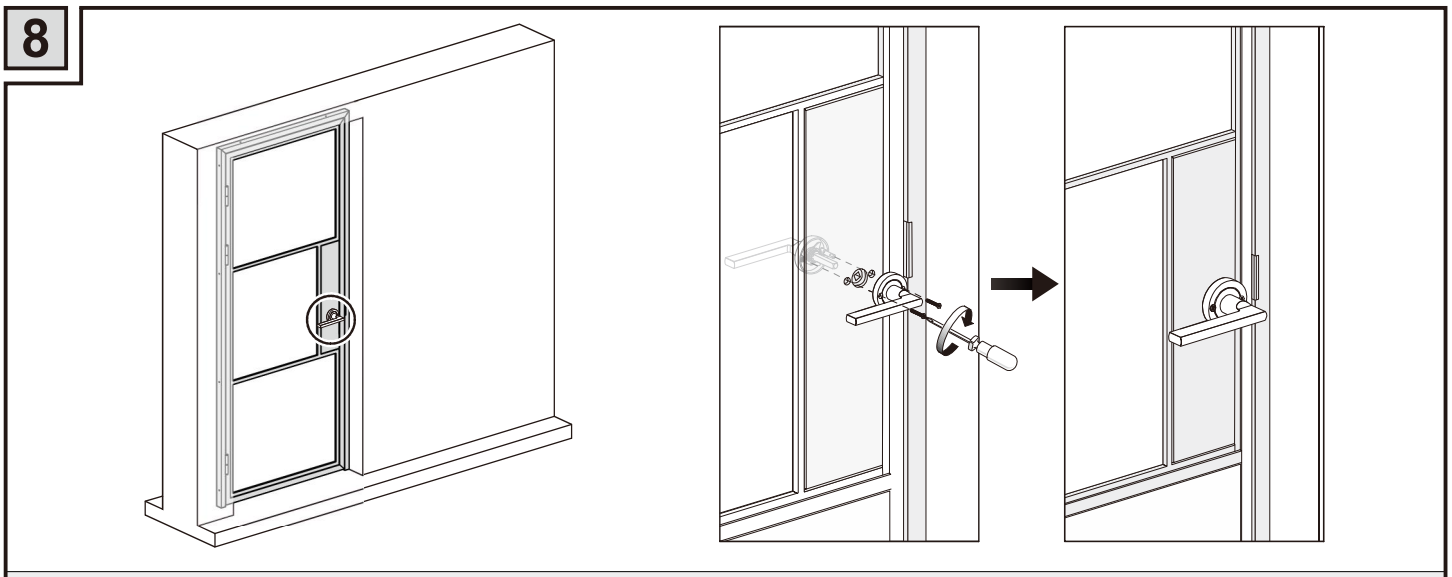

Install the handle on the door

JuBest

Website: www.JuBest.com
Feel Free to Contact Us: support@jubest.com