Instruction Manual

8’x14’ Storage Shed

Thanks for choosing Abba Patio products.We'd love to hear your thoughts and comments.
If you are satisfied with our products and service,please let us know.
If you have questions or feedbacks, we're here to help!
Also be sure to follow us on facebook for promotions and special offers.

844-642-2227
www.abbapatio.com
service@abbapatio.com
www.facebook.com/abbapatio

8'x14' Storage Shed

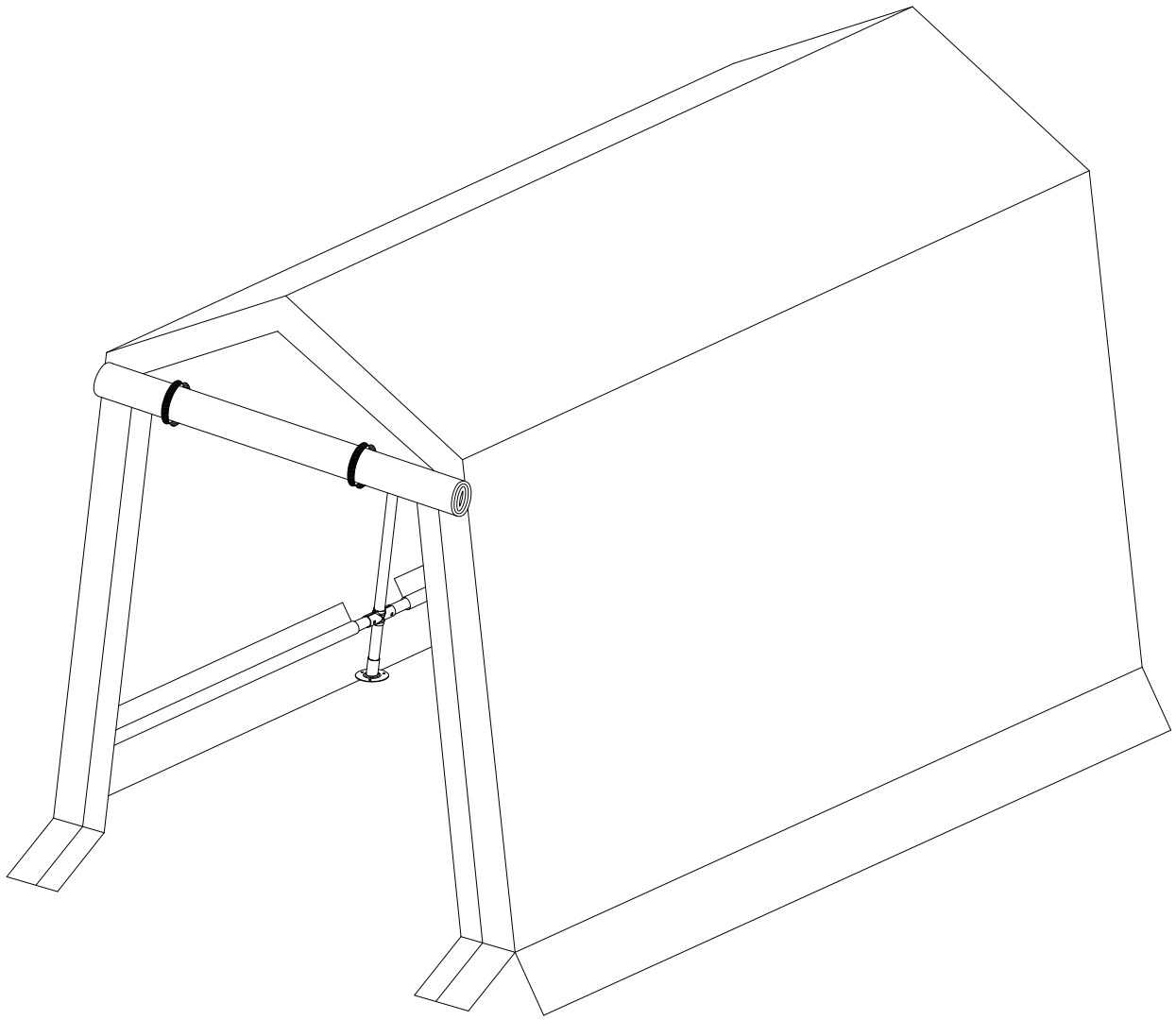

PART	ILLUSTRATION	QTY
A	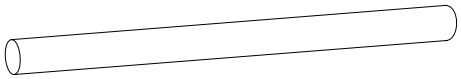	6
B	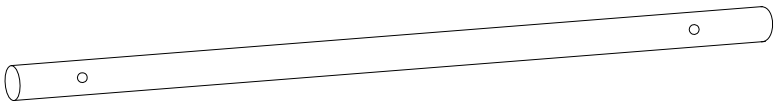	10
C		6
D	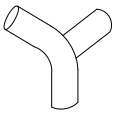	6
E	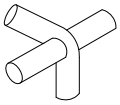	3
F	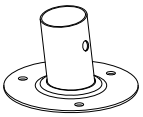	6
G		8
H	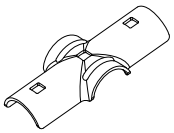	4
I		6
J		8
K	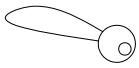	32
L		6
M	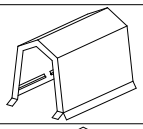	1
N	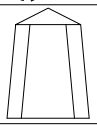	1

1.

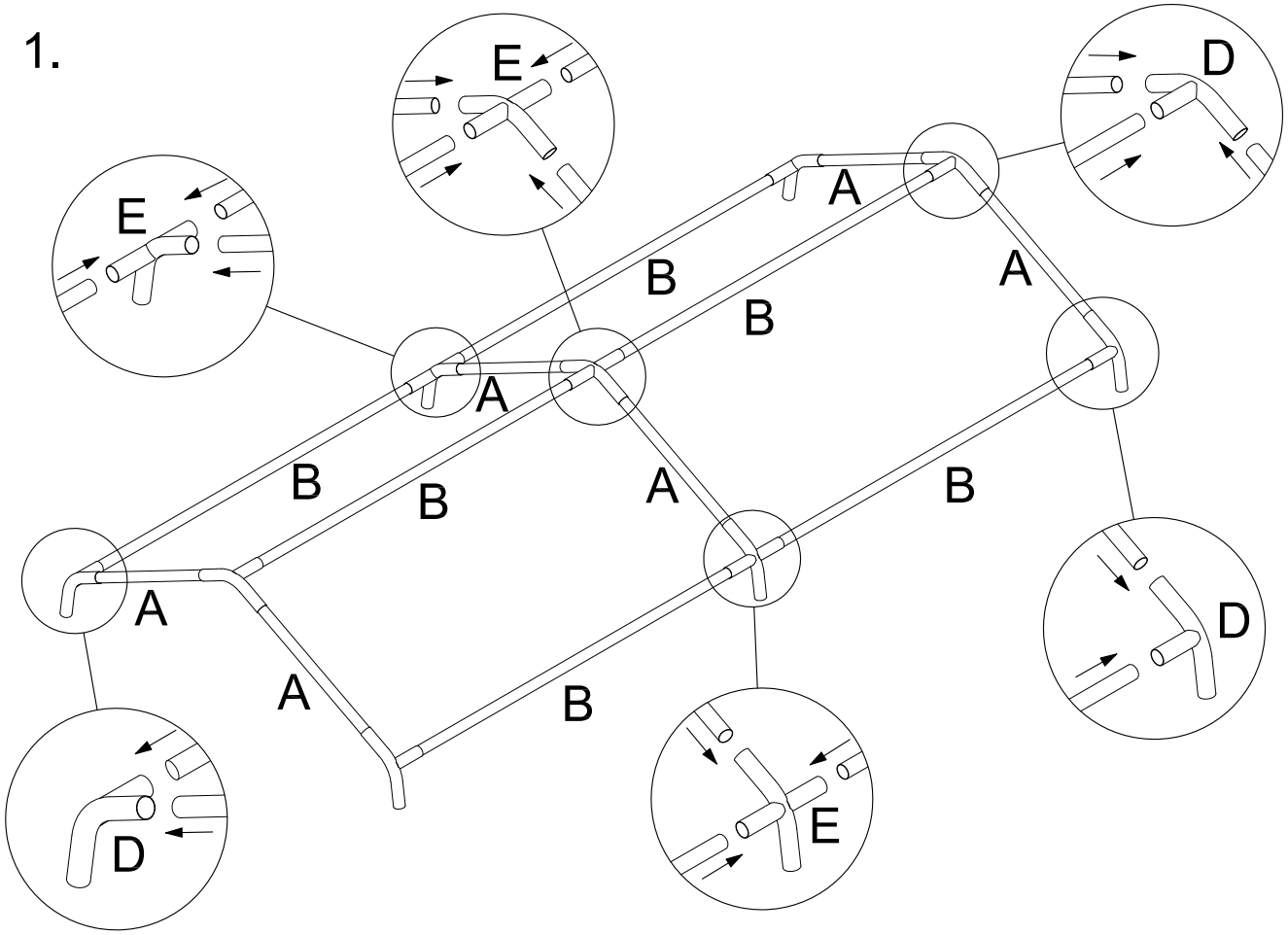

2.

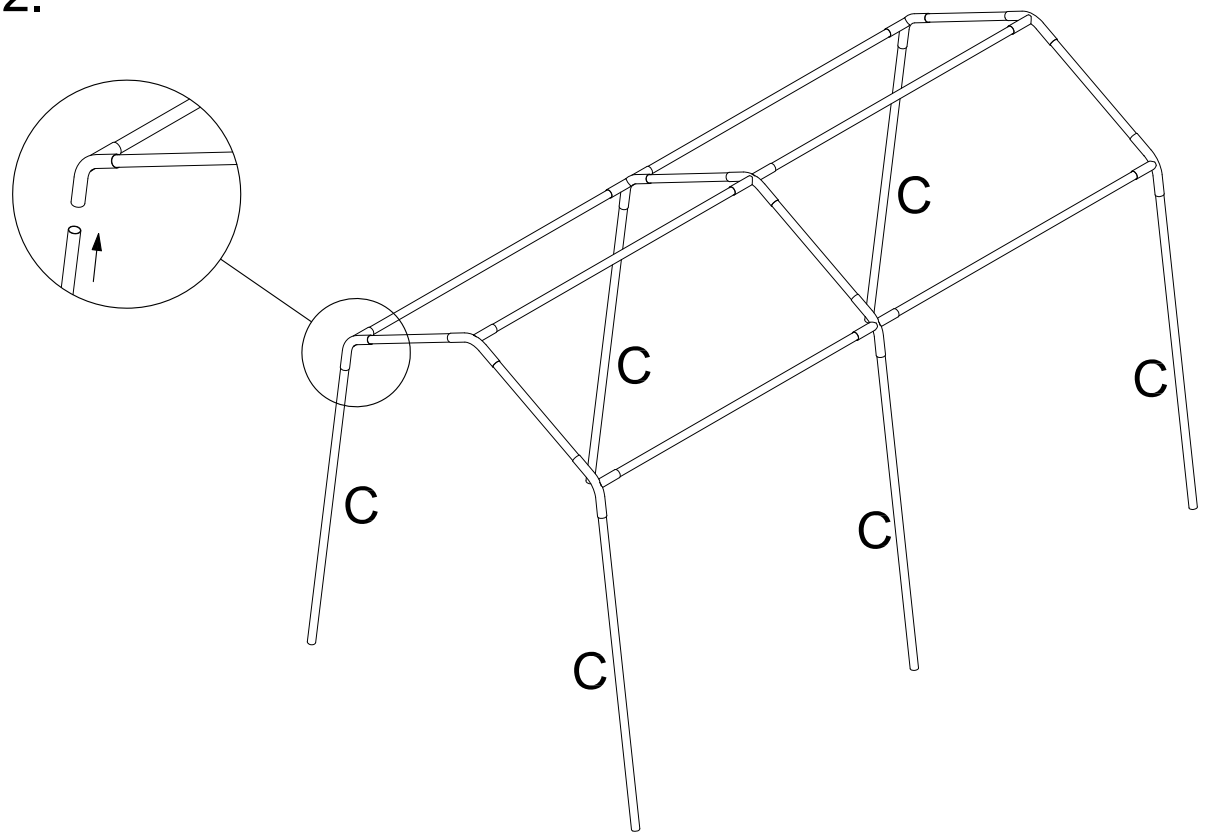

3.

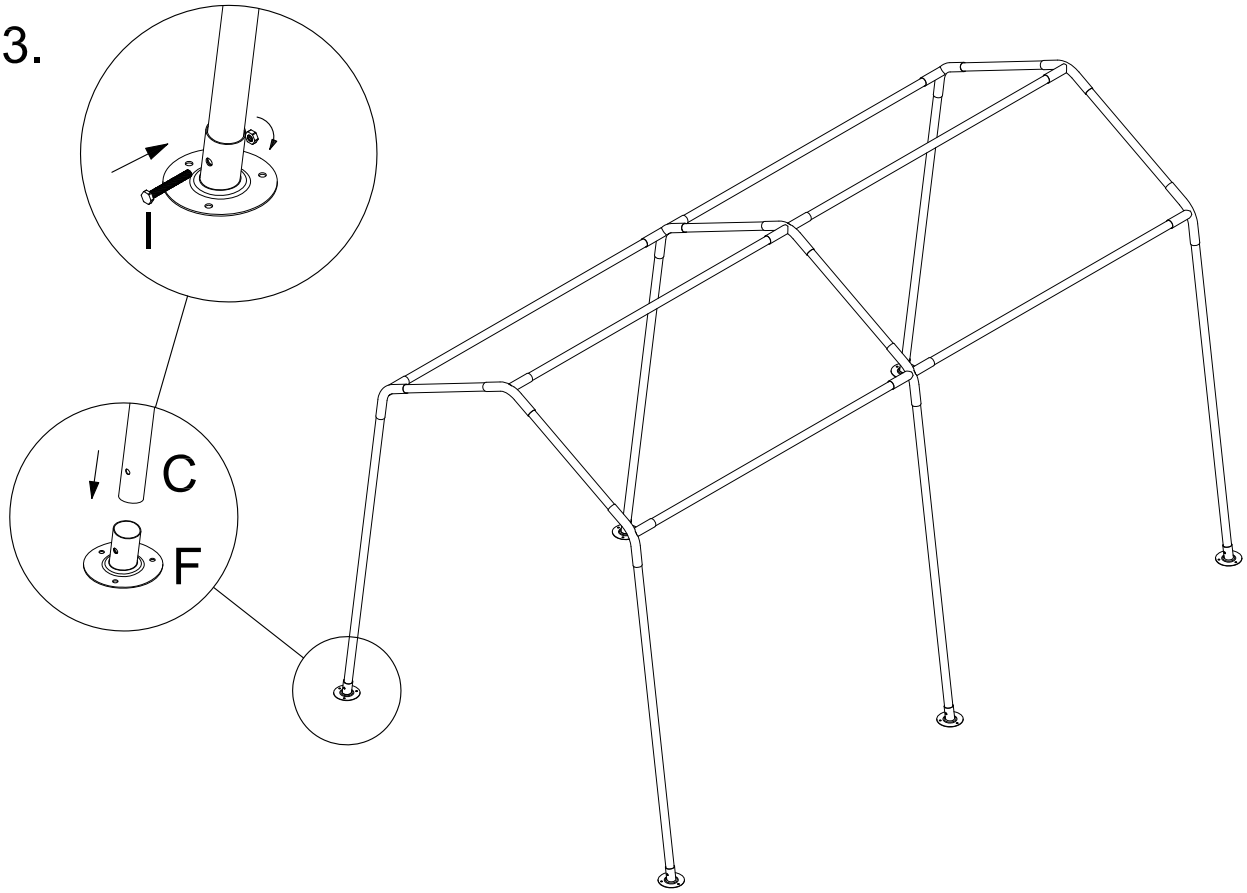

4.

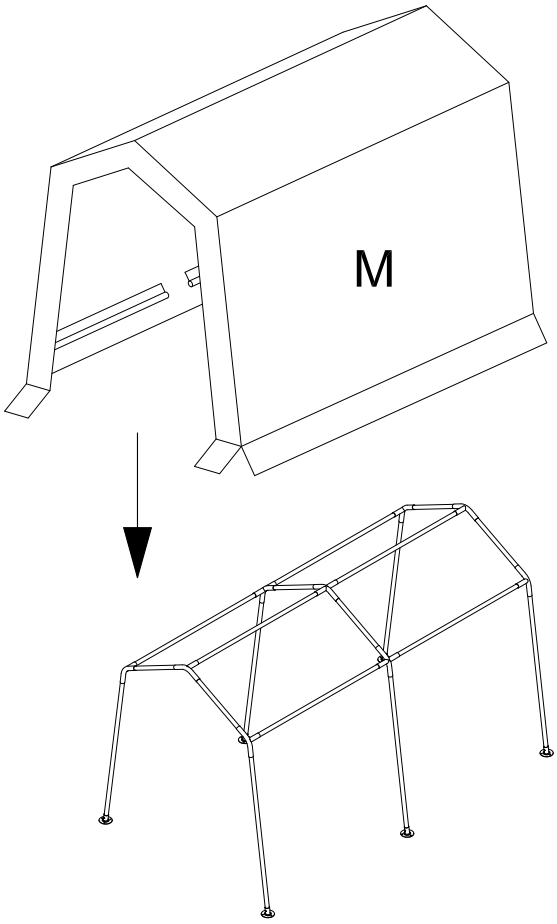

5.

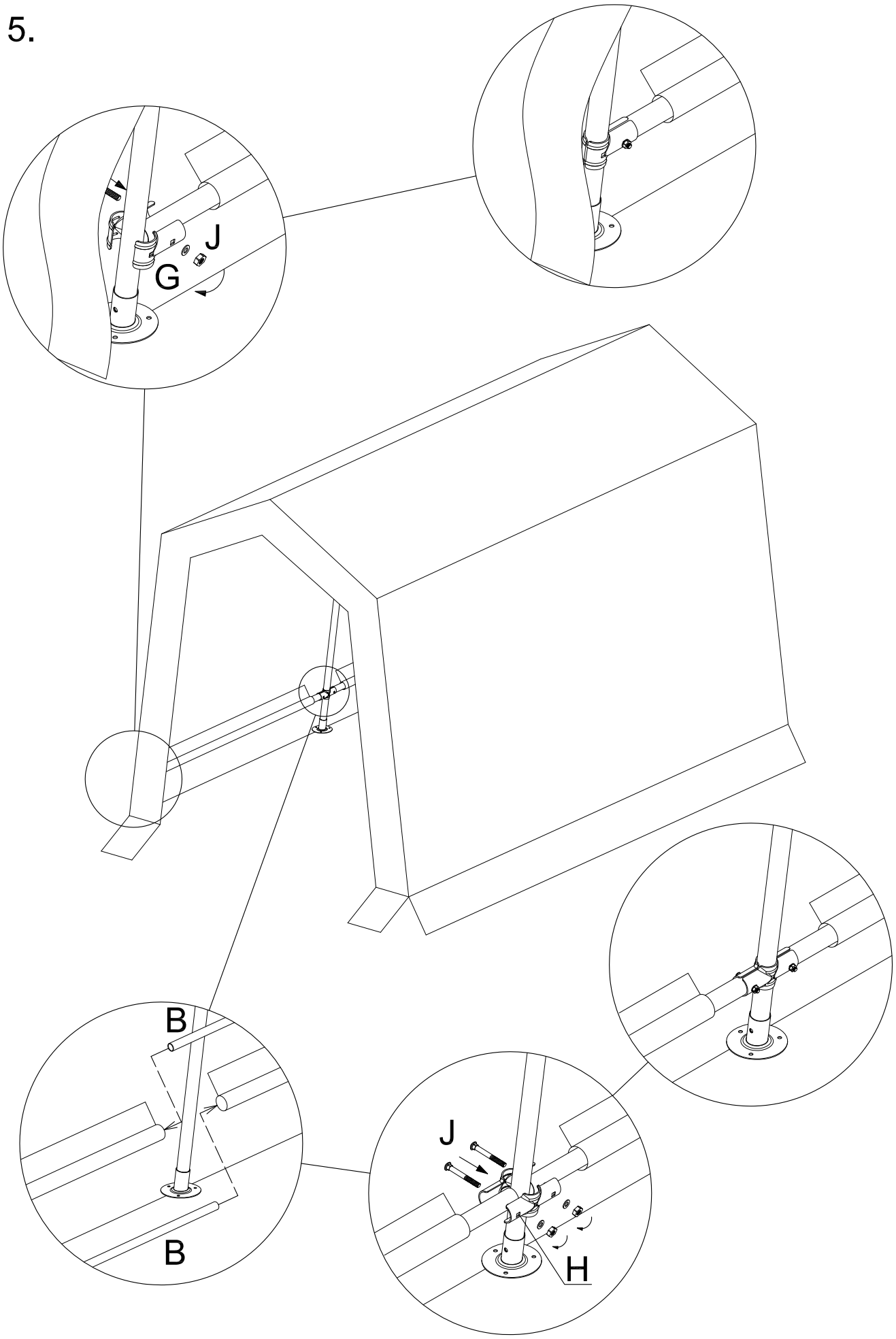

6.

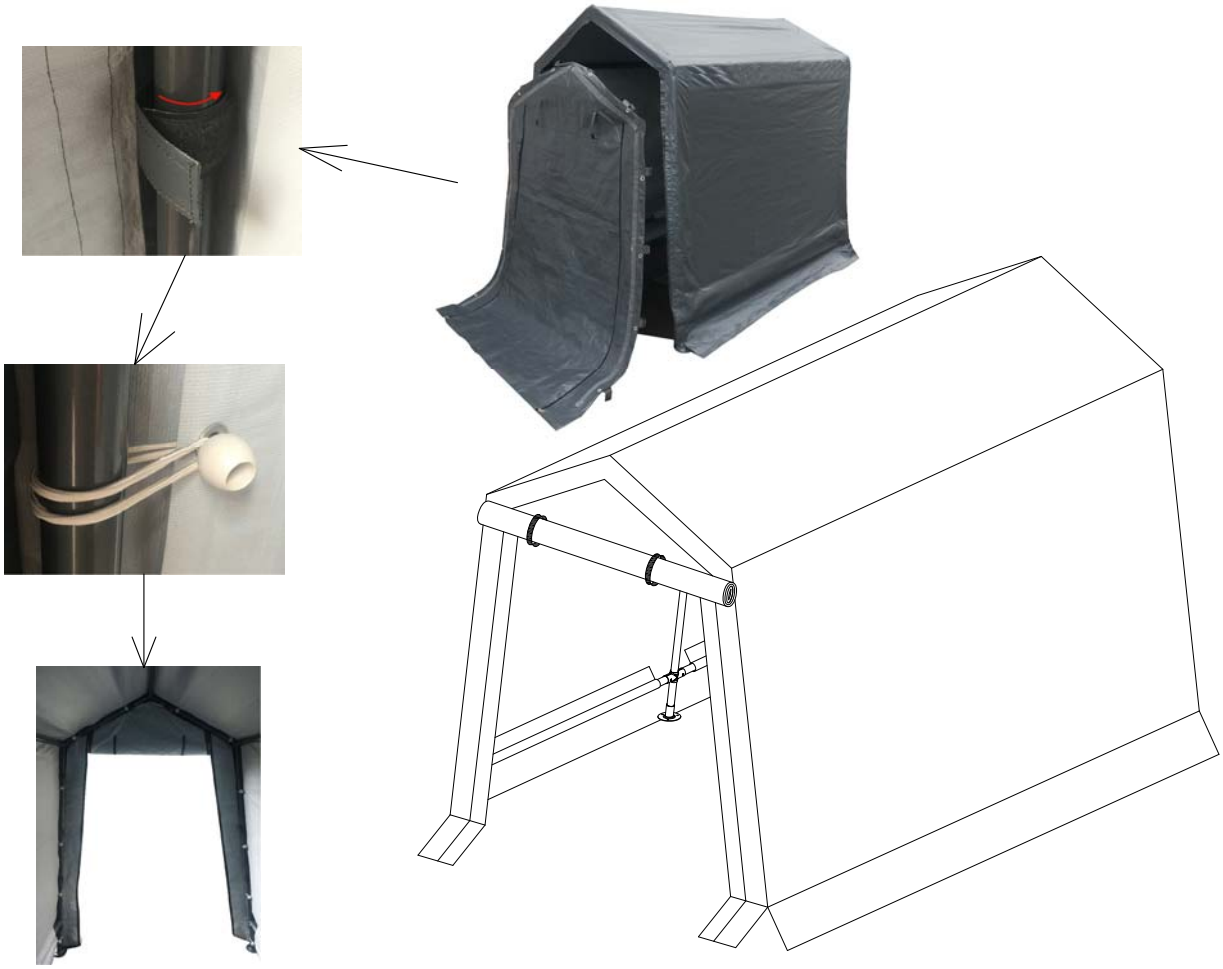
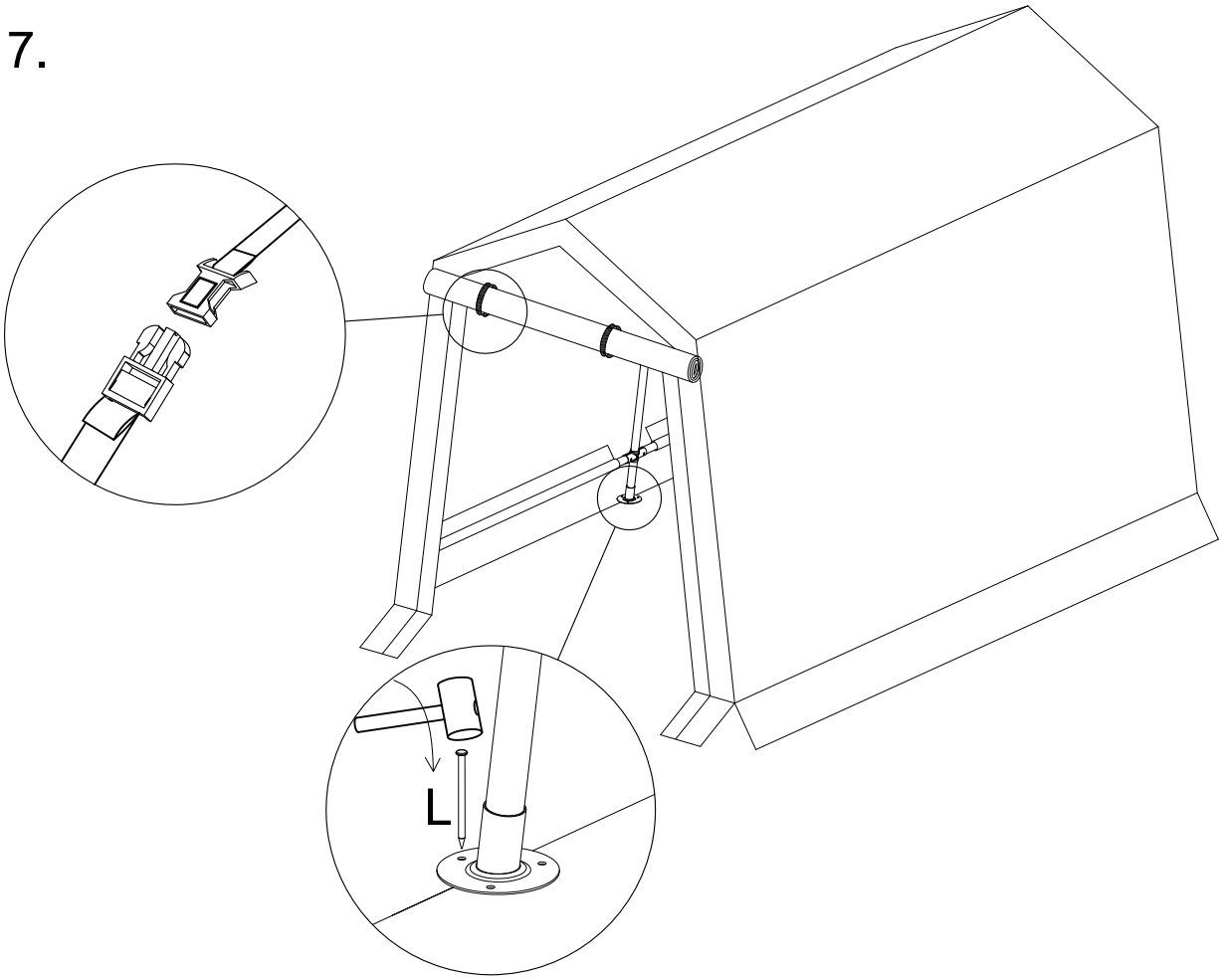
7.