ASSEMBLY INSTRUCTIONS

Scan and watch the installation video

Ax1 Backrest 	Sx1 Seat 	Bx2 Front leg 	Cx2 Rear leg 	Dx4 Adjust cap 	
Ex4 Screw  M8*60mm	Fx7 Screw  M8*55mm	Gx11 Spring washer  M8	Hx13 Flat washer  M8*22mm	Kx1 Allen key 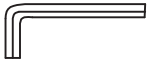 M8	Lx1 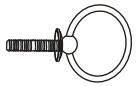

① The legs and screws and ring are inside of seat cushion. Pls unzip and open the seat.

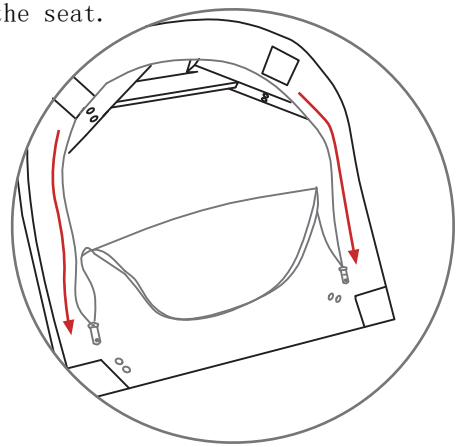

② 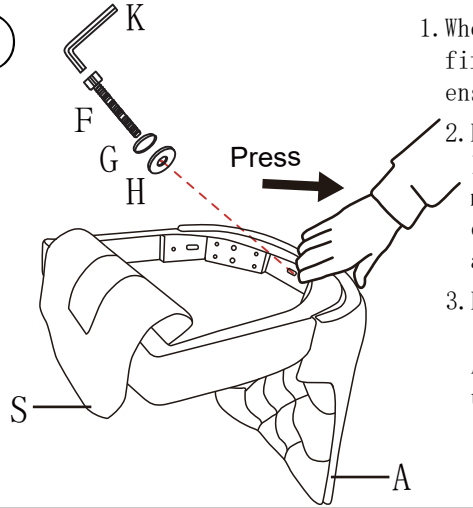

1. When installing the seat and backrest, firmly press them together first to ensure they are fully aligned.
2. Put the Gx1 and Hx1 on the screw, Insert the screws straight into the middle hole, making sure the screw is completely vertical and properly aligned with the nut.
3. Hand-tighten the screw first to about 10% tightness. Then use the included Allen key to tighten the screw further, up to about 70% tightness.

③ 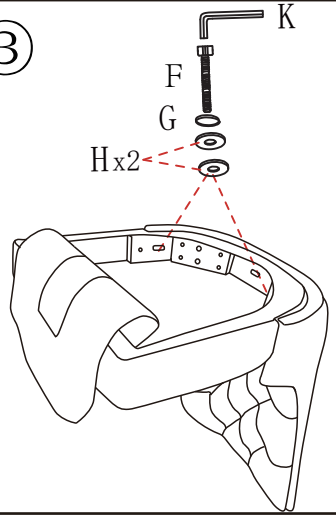

Warning!!!
Don't tighten all screws until the step 3 is complete.

1. While keeping pressure on the connection, install and tighten the screws on both sides evenly.
   If the screws are tightened before the parts are fully pressed together, it can cause the backrest to feel loose, tilted, or unable to seat properly, which matches what we see in the photos.

④ 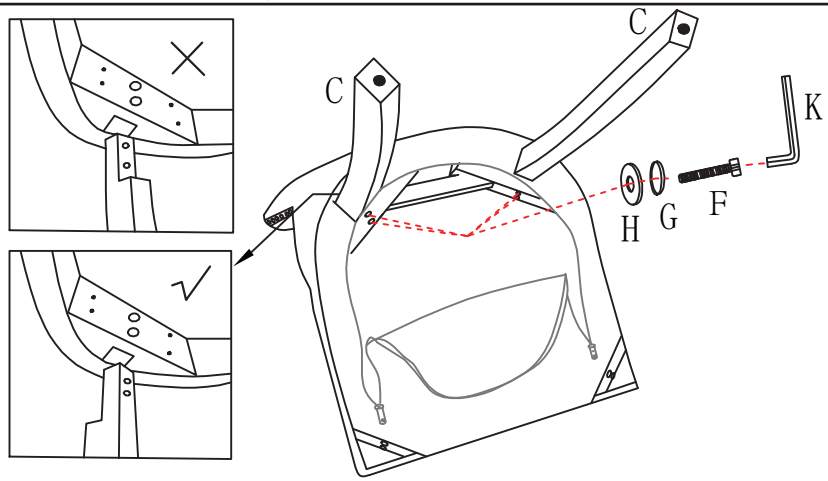

Tighten all the screws to 80% of maximum tightness

WARNING: DO NOT STAND ON THE PRODUCT, DO NOT USE THIS PRODUCT AS A STEP LADDER.
DO NOT USE THIS PRODUCT UNLESS ALL BOLTS, SCREWS AND KNOBS ARE FIRMLY SECURED.
PLEASE DO NOT USE KNIFE TO OPEN ANY PARTS OF THE BOX OR PRODUCT.

ASSEMBLY INSTRUCTIONS

⑤

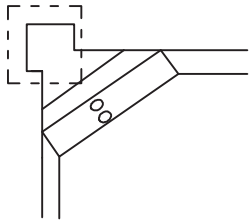

1、Put the front leg in the dotted box place,if you put it in the wrong place, it still can work,but the uneven force will cause theleg to break.

2、Tighten all the screws to 80% of maximum tightness

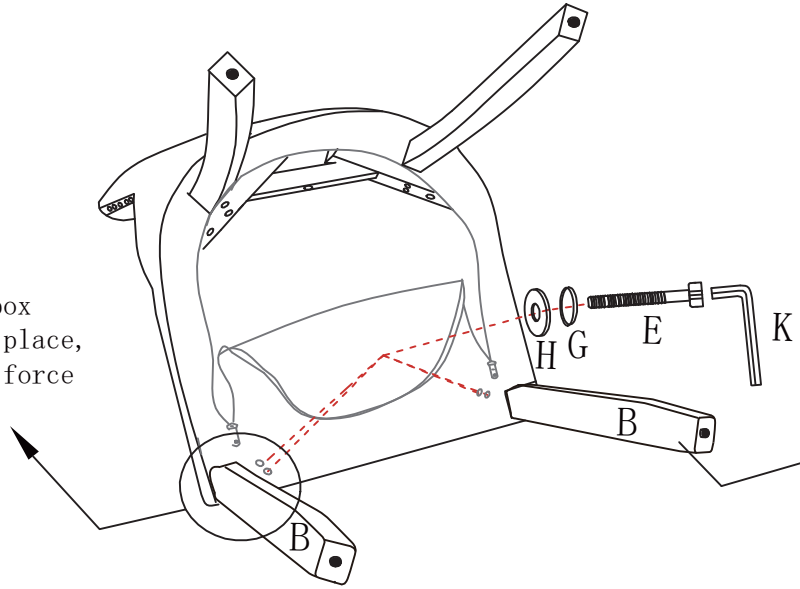

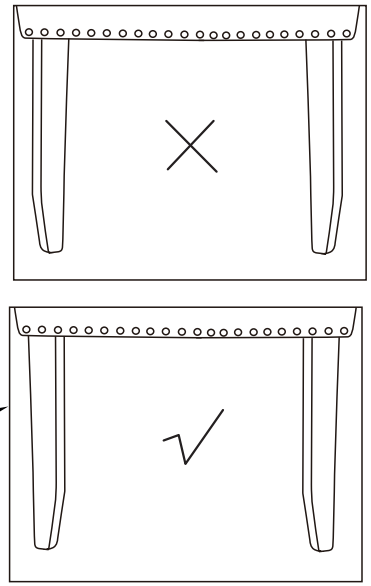

⑥

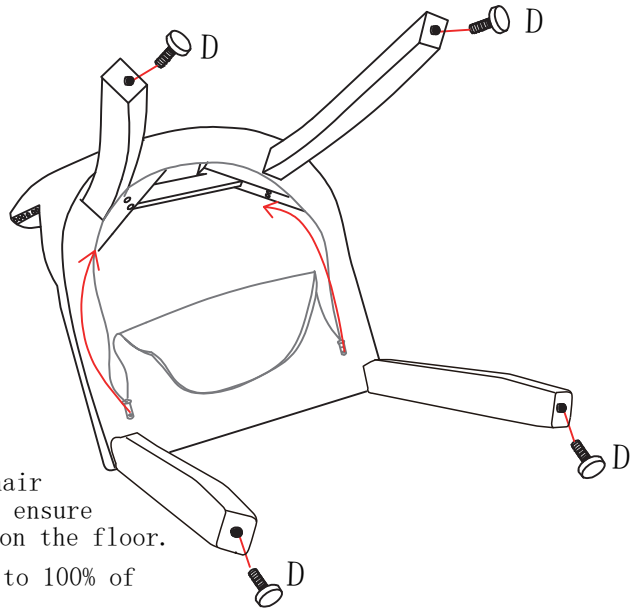

1. screw D into legs.
2. Carefully sit on the chair and make adjustments to ensure the legs are flat even on the floor.
3. Tighten all the screws to 100% of maximum tightness
4. Close the zipper of bottom Non-Woven fabric.

⑦

There are 4 small adjusters on the legs , ensure these are adjusted so the chair sits level.

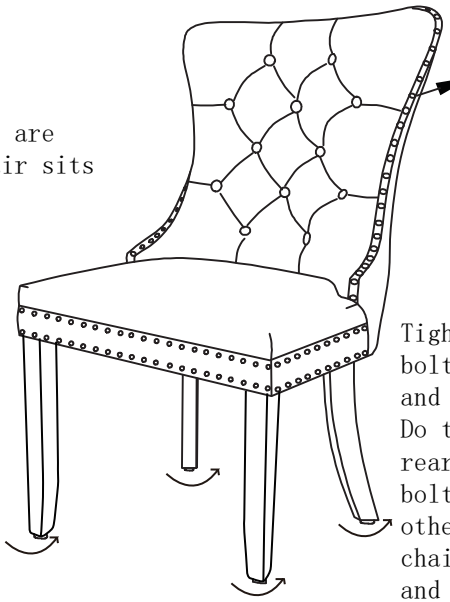

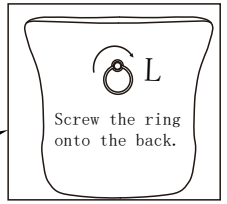

Tighten one adjustment bolt on the front leg and loosen the other. Do the same for the rear leg—tighten one bolt and loosen the other—to ensure the chair remains level and properly balanced.

ASSEMBLY INSTRUCTIONS

Ax1  Backrest	Fx7  M8*55mm Screw
Sx1  Seat	Gx11 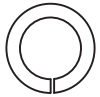 M8 Spring washer
Bx2  Front leg	Hx13  M8*22mm Flat washer
Cx2  Rear leg	Kx1 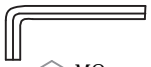 M8 Allen key
Dx4  Adjust cap	Lx1 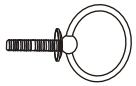
Ex4  M8*60mm Screw	

① The legs and screws and ring are inside of seat cushion. Pls unzip and open the seat.

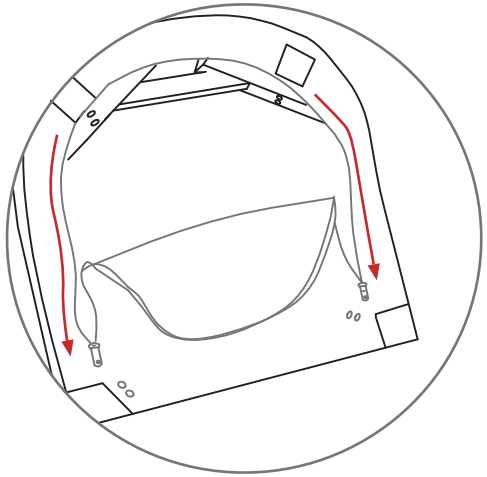

② 1. When installing the seat and backrest, firmly press them together first to ensure they are fully aligned.
2. Put the GX1 and HX1 on the screw, Insert the screws straight into the middle hole, making sure the screw is completely vertical and properly aligned with the nut.

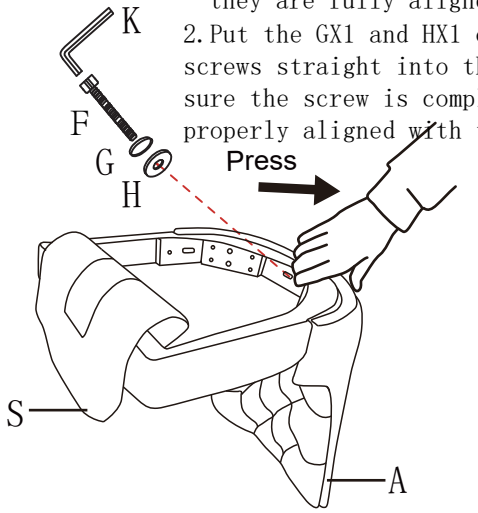

③

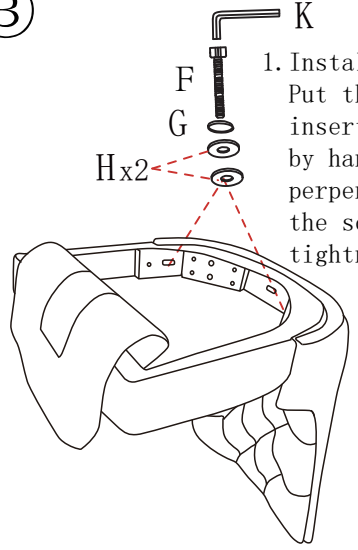

1. Install the screws on both sides: Put the Gx1 and Hx2 on the screw, insert them vertically into the hole by hand, keep the screw completely perpendicular to the nut, and tighten the screw by hand to about 10% tightness instead of allen key
2. All steps insert screws vertically into the hole by hand firstly, then using allen key to 100%

④

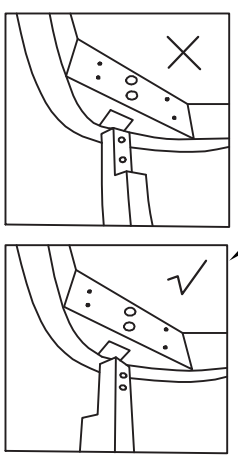

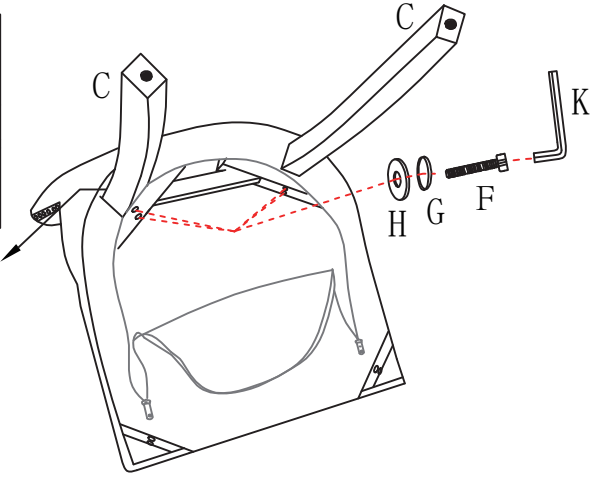

Tighten all the screws to 80% of maximum tightness

WARNING:
DO NOT STAND ON THE PRODUCT, DO NOT USE THIS PRODUCT AS A STEP LADDER.
DO NOT USE THIS PRODUCT UNLESS ALL BOLTS, SCREWS AND KNOBS ARE FIRMLY SECURED.
PLEASE DO NOT USE KNIFE TO OPEN ANY PARTS OF THE BOX OR PRODUCT.