USE AND CARE GUIDE

ELECTRIC FIREBOX

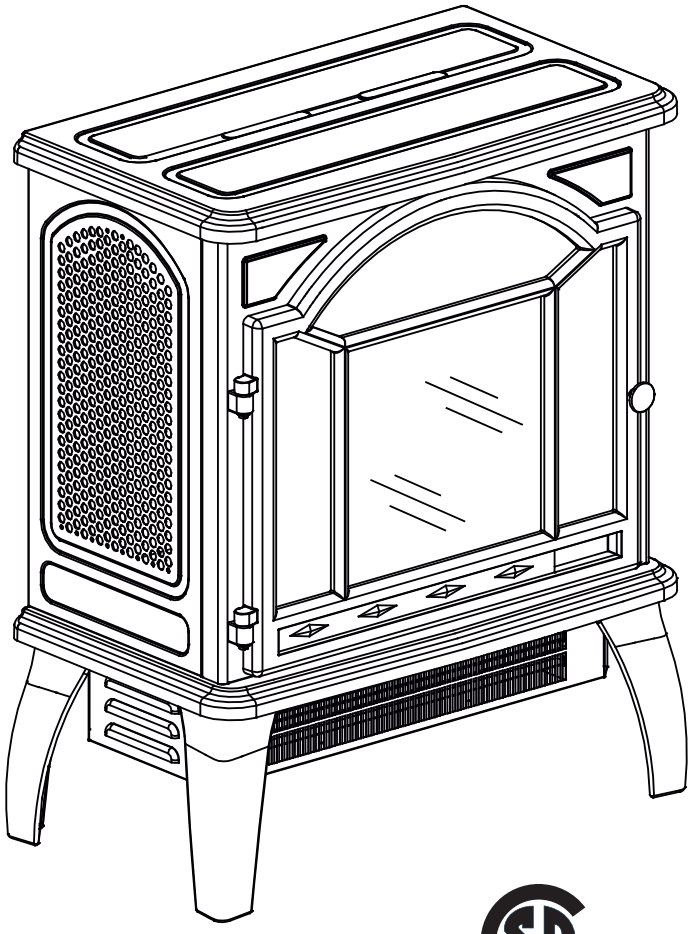

C US
261046

S18P1-01

CONSUMER SAFETY INFORMATION: PLEASE READ THIS MANUAL BEFORE INSTALLING AND OPERATING THIS APPLIANCE. FAILURE TO FOLLOW THESE INSTRUCTIONS MAY RESULT IN A POSSIBLE ELECTRIC SHOCK, FIRE HAZARD, AND/OR INJURY AND WILL VOID THE WARRANTY.

WARNING: IF THE INFORMATION IN THIS MANUAL IS NOT FOLLOWED, AN ELECTRIC SHOCK OR FIRE MAY RESULT IN PROPERTY DAMAGE, PERSONAL INJURY, OR LOSS OF LIFE.

THIS INSTRUCTION BOOKLET CONTAINS IMPORTANT SAFETY INFORMATION. PLEASE READ AND KEEP FOR FUTURE REFERENCE.

IMPORTANT INSTRUCTIONS

When using electrical appliances, basic precautions should always be followed to reduce the risk of fire, electrical shock, and/or injury including the following:

1. Read all instructions before using this heater.

2. This heater is hot when in use. To avoid burns, do not let bare skin touch hot surfaces. If provided, use handles when moving this heater. Keep combustible materials, such as furniture, pillows, bedding, papers, clothes, and curtains at least 3 feet (0.9 m) from the front of the heater and keep them away from the sides and rear.

3. Extreme caution is necessary when any heater is used by or near children or invalids and whenever the heater is left operating and unattended.

4. Always unplug heater when not in use.

5. Do not operate any heater with a damaged cord or plug or after the heater malfunctions, has been dropped or damaged in any manner. Discard heater, or return to authorized service facility for examination and/or repair.

6. Do not use outdoors.

7. This heater is not intended for use in bathrooms, laundry areas and similar indoor locations. Never locate heater where it may fall into a bathtub or other water container.

8. Do not run cord under carpeting. Do not cover cord with throw rugs, runners, or similar coverings. Do not route cord under furniture or appliances. Arrange cord away from traffic area and where it will not be tripped over.

9. To disconnect heater, turn controls to off, then remove plug from outlet.

10. Connect to properly grounded outlets only.

11. Do not insert or allow foreign objects to enter any ventilation or exhaust opening as this may cause an electric shock or fire, or damage the heater.

12. To prevent a possible fire, do not block air intakes or exhaust in any manner. Do not use on soft surfaces, like bed, where opening may become blocked.

13. This heater has hot and arcing or sparking parts inside. Do not use it in areas where gasoline, paint, or flammable liquids are used or stored.

14. Use this heater only as described in this manual. Any other use not recommended by the manufacturer may cause fire, electric shock, or injury to persons.

15. Always plug heaters directly into a wall outlet/receptacle. Never use with an extension cord or relocatable power tap (outlet/power strip).

16. This heater, when installed, must be electrically grounded in accordance with local codes or, in the absence of local codes, with the current CSA C22.1 Canadian Electrical Code or for USA installations, follow local codes and the National Electrical Code, ANSI/NFPA NO.70.

17. Under no circumstances should this heater be modified. Parts having to be removed for servicing must be replaced prior to operating this fireplace again.

18. There is a protective thermostat limiter inside the heater. When the inner temperature over heat, the thermostat limiter will shut off the power supply to avoid the risk of fire damage to the appliance.

19. If the supply cord is damaged, it must be replaced by the manufacturer, it’s service agent or similarly qualified persons in order to avoid a hazard.

20. Any repairs to this fireplace should be carried out by a qualified service person.

21. This heater should not be used as a drying rack for clothing. Christmas stockings or decorations should not be hung in area of it.

22. The heaters must not be located immediately below a socket-outlet.

SAVE THESE INSTRUCTIONS

PACKAGE CONTENTS

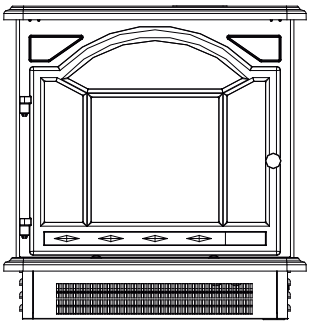

Electric fireplace

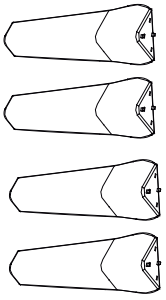

feet x 4

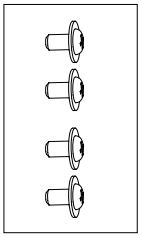

screws x 4

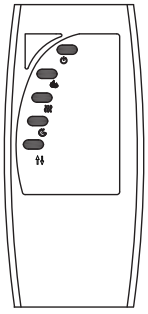

Remote Control



Manual

SPECIFICATIONS

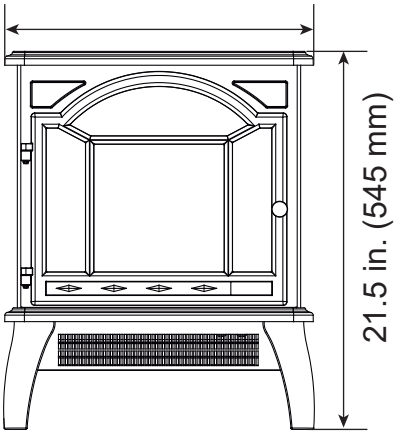

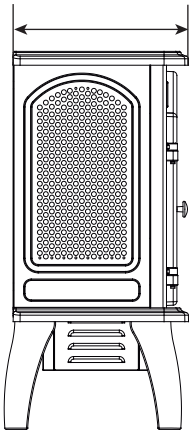

SPECIFICATIONS	S18P1-01
Voltage	120V AC
Frequency	60HZ
Heater Rating	1500W
Width	17.5 in. (445mm)
Depth	10 in. (254mm)
Height	21.5 in. (545mm)

SAFETY INFORMATION

This heater is for use on 120 volts. The cord has a plug as shown at (A) in figure 1. An adapter as shown at (C) is available for connecting three-blade grounding-type plugs to two-slot receptacles. The green grounding lug extending from the adapter must be connected to a permanent ground such as a properly grounded outlet box. The adapter should not be used if a three-slot grounded receptacle is available.

NOTE: Adapters are NOT for use in Canada.

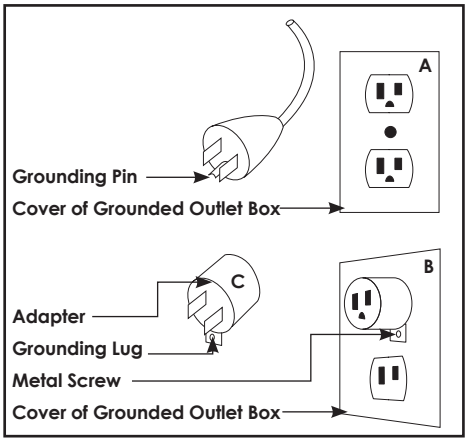

Figure 1

Do not share a socket with other appliances when using electric fireplaces, please use a dedicated socket.

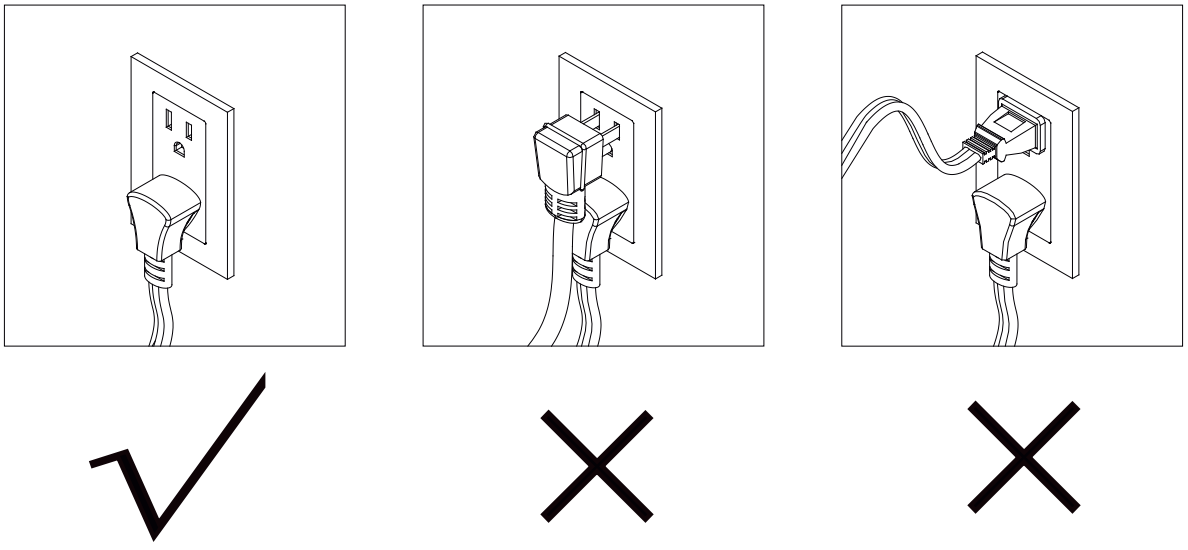

Never use with an extension cord or relocatable power tap (outlet / power strip).

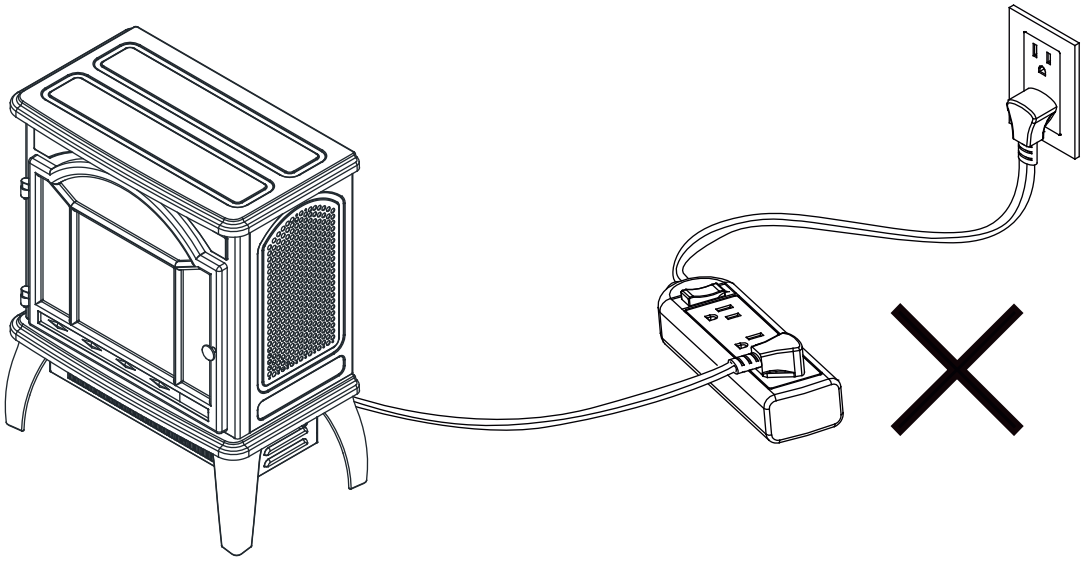



COLD CLIMATE INSTALLATION RECOMMENDATION:

When installing this unit against a Non-insulated exterior wall or chase, it is mandatory that outer walls be insulated to conform to applicable insulation codes.

ELECTRICAL CONNECTION

The unit comes standard with 6 feet (1.8M) three wire cord, exiting from the rear of the fireplace. Plan the installation to avoid the use of an extension cord.

CLEANING TRIM

Clean the metal trim using a soft cloth, slightly dampened with citrus oil based product and buff with a clean soft cloth.

DO NOT use brass polish or household cleaners as these products will damage the metal trim.

Citrus oil based products can be obtained at supermarkets or hardware stores.

MAINTENANCE

The motors used on the fan and the flame generator assembly are pre-lubricated for extended bearing life and require no further lubrication. However, periodic cleaning/vacuuming of the fan/ heater unit is recommended. Make sure the unit is turn OFF and unplugged whenever you are cleaning the heater of fireplace.



WARNING : Make sure the power is turned off before proceeding. Any electrical repairs or rewiring of this unit should be carried out by a licensed electrician in accordance with national and locate codes. If repairing or replacing any electrical component or wiring, the original wire routing, color coding and securing locations must be followed.



WARNING : Electric outlet wiring must comply with local building codes and other applicable regulations to reduce risk of fire, electric shock and injury to persons.



WARNING : Do not use this fireplace if any part of it has been under water.

Immediately call a qualified service technician to inspect the fireplace and replace any part of the electrical system.

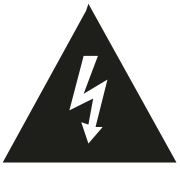

WARNING : Disconnect power before attempting any maintenance or cleaning to reduce the risk of fire, electrical shock or personal injury.



WARNING : During any service of this appliance, the power to the unit must be turned off, Always remember to remove the electrical plug from the wall outlet.

INSTALLATION

Please read and understand this entire manual before attempting to assemble, operate or install the product.

WARNING: Do not install unit on shelves, raised platforms, beds, blankets, pillows etc. Keep combustible materials such as furniture, bedding, papers, clothes and curtains at least 3 feet (914 mm) from the stove.

Before beginning assembly of product, make sure all parts are present. Compare parts with package contents list and hardware contents above. If any part is missing or damaged, do not attempt to assemble the product. Contact customer service for replacement parts.

Estimated Assembly Time: 20 minutes

Tools Required for Assembly (not included): Phillips screwdriver

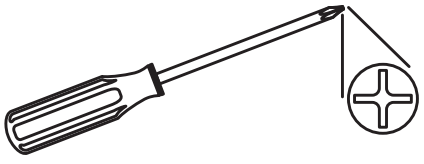

Lay stove (A) upside down on a padded surface with the underside accessible. Attach leg (B) to stove by inserting the tab on the top of the leg (B) into the corresponding slot on the bottom of the stove (A). Insert one screws (C) into predrilled holes and tighten securely.

Repeat with remaining three legs.

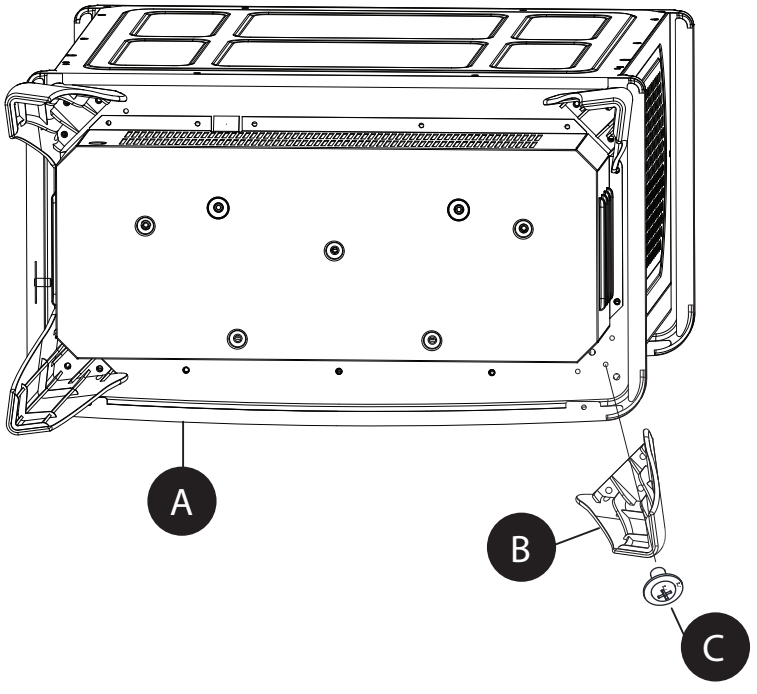

OPERATION

Check that the stove outlet grill is not covered or obstructed in anyway.

NOTE: When the heat function is used for the first time, a slight odor may be present. This is normal and should not occur again unless the heater is not used for an extended period of time.

The control panel is located behind the door of the stove. This panel contains the buttons to properly operate the electric fireplace. The functions of buttons on the remote control are the same as the control panel. The remote control has an effective range of up to 19 ft..

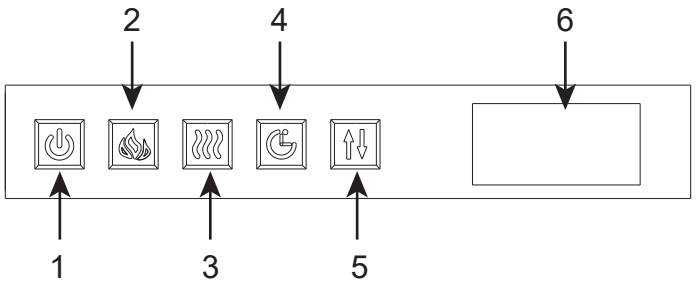

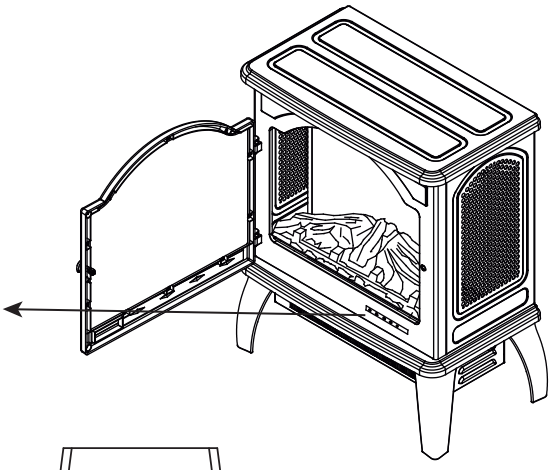

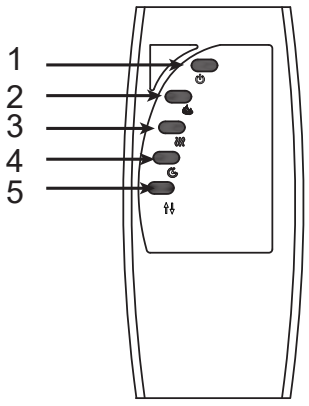

1. POWER BUTTON
2. FLAME BUTTON
3. HEATER BUTTON
4. TIMER BUTTON
5. INCREASE/DECREASE BUTTON
6. DIGITAL DISPLAY

POWER BUTTON

The POWER BUTTON is used to turn the stove on or off. It has a memory function; the button turns off all functions at once but retains the settings in the memory except for the TIMER settings. By pressing the button again, the unit will turn on at the same settings. If the TIMER has set & time has expired all functions will stop. Press the POWER BUTTON start the stove.

FLAME BUTTON

The FLAME BUTTON is used to adjust the brightness of flame. There are 3 brightness levels（L4-L2), flame off and the ember bed brightest (L1), and an OFF position you can cycle through. When the flame is in OFF position, turn on the heater at this time, the ember bed will be slightly bright to indicate that the heat has been turned on.

HEATER BUTTON

The HEATER BUTTON is used to turn the heater on or off. Pressing the HEATER BUTTON once turns the Heater on. Pressing the HEATER BUTTON a second time within 10 seconds will turn the heater off. When turn off the heater, the quartz tubes will stop working first, then the blower after 60 seconds.

When the heater is on, press the INCREASE/DECREASE BUTTON to change the desired temperature. There are 11 temperature settings : 82℉-ON - 64℉- 66℉ - 68℉-70℉-72℉-74℉-76℉-78℉-80℉ (27℃-ON - 18℃-19℃- 20℃-21 ℃-22℃-23℃- 24℃-25℃-26℃).

ON means the quartz tubes keep working.

Temperature unit convert function: With the heater on, press and hold the POWER BUTTON for 5 seconds, current temperature unit display will flash 3 timers and convert to another temperature unit. **(Note: This can't be set with the remote control).**

Lock & unlock heater function: Press and hold the HEATER BUTTON for 10 seconds, the ember bed will flash 6 times, indicating that the heater function is locked. To unlock the heater function, just repress and hold the HEATER BUTTON for 10 seconds again, then the ember bed will also flash 6 times indicating the heater function is unlocked and to recover the original states which you have set. **(Note: This can't be set with the remote control).**

TIMER BUTTON

The TIMER BUTTON is use to set the timer at range from 1 hour to 9 hours and OFF. As shown the following: 1h-2h-3h-4h-5h-6h-7h-8h-9h-OFF. If the digital display turns on and nothing happens within 10 seconds, the digital display will auto shut off. Once you have set the timer, and the timer is up, close all the functions and enter standby mode. In this mode, you should press the POWER BUTTON to restart the appliance.

INCREASE/DECREASE BUTTON

With the heater on, press the INCREASE/DECREASE BUTTON to change the desired temperature. There are 11 temperature settings:82℉-ON-64℉-66℉-68℉-70℉-72℉-74℉-76℉-78℉-80℉(27℃-ON -18℃-19℃-20℃-21℃-22℃-23℃-24℃-25℃-26℃).

FCC STATEMENT

This device complies with part 15 of the FCC Rules. Operation is subject to the following two conditions: (1) This device may not cause harmful interference, and (2) this device must accept any interference received, including interference that may cause undesired operation.

This equipment has been tested and found to comply with the limits for a Class B digital device, pursuant to part 15 of the FCC Rules. These limits are designed to provide reasonable protection against harmful interference in a residential installation. This equipment generates, uses and can radiate radio frequency energy and, if not installed and used in accordance with the instructions, may cause harmful interference to radio communications. However, there is no guarantee that interference will not occur in a particular installation. If this equipment does cause harmful interference to radio or television reception, which can be determined by turning the equipment off and on, the user is encouraged to try to correct the interference by one or more of the following measures:

- Reorient or relocate the receiving antenna.
- Increase the separation between the equipment and receiver.
- Connect the equipment into an outlet on a circuit different from that to which the receiver is connected.
- Consult the dealer or an experienced radio/TV technician for help.

CAUTION: Changes or modifications not expressly approved by the party responsible for compliance could void the user's authority to operate the equipment.

BATTERIES REPLACEMENT

NOTE:

·Do not mix old and new batteries.

·Do not mix alkaine, standard (carbon zinc), or rechargable (nicad, nimh, etc.) batteries.

·Do not ingest batteries.

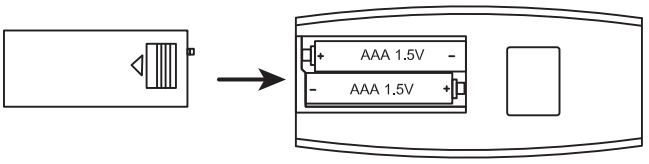

CAUTION:

·Always purchase the correct size and grade of battery most suitable for the intended use.

·Replace all batteries of a set at the same time.

·Clean the battery contacts and also those of the device prior to battery installation.

·Ensure the batteries are installed correctly with regard to polarity (+ and -).

·Remove batteries from equipment which is not to be used for an extended period of time.

·Remove used batteries promptly

TROUBLESHOOTING

Fault code	Fault Cause	Solution
E1	The heater overheating	Call after-sales service.
E3	The heater not working.	If the vents are dirty or clogged. Unplug the power, clean the dust and debris of the vent area. Wait for 5 minutes, plug in and turn on the heater. If the heater still don't work, please call after-sales service.

1 YEAR LIMITED WARRANTY

Electrical Fireplace Basic Warranty

Our electrical fireplace is free from manufacturing and material defects for a period of one year from date of purchase, subject to the following conditions and limitations.

1. This electric fireplace must be installed and operated at all times in accordance with the installation and operating instructions furnished with the product, Any unauthorized repair, alteration, willful abuse, accident, or misuse of the product shall nullify this warranty.

2. This warranty is non-transferable, and is made to the original owner, provided that the purchase was made through an authorized supplier of the company.

3. The warranty is limited to the repair or replacement of parts found to be defective in material or workmanship, provided that such part(s) have been subjected to normal conditions of use and service, after said defect si confirmed by the Company's inspection.

4. The Company may, at its discretion, fully discharge all obligation with respect to this warranty by refunding the wholesale price of the defective part(s).

5. Any installation, labor, construction, transportation, or other related costs/expenses arising from defective part(s),repair, replacement, or otherwise of same, will not be covered by this warranty, nor shall the Company assume responsibility for same.

6. The owner/user assumes all other risks, if any, including the risk of any direct, indirect or consequential loss or damage arising out of the use, or inability to use the product, except as provided by law.

7. All other warranties-expressed of implied-with respect to the product, its components and accessories, or any obligation/liabilities on the part of the Company are hereby expressly included.

8. The Company neither assumes, nor authorizes any third party to assume, on its behalf, any other liabilities with respect to the sale of our product.

9. The warranties as outlined within this document do not apply to non our accessories used in conjunction with the installation of this product. This warranty is void if :

a. The fireplace is subjected to prolonged periods of dampness or condensation.
b. Any unauthorized alteration, willful abuse, accident, or misuse of the product.
c. You do not have the original receipt of purchase.

Made in China
Printed in China