ASSEMBLY INSTRUCTION

ITEM NO:.D60001.002.005.007

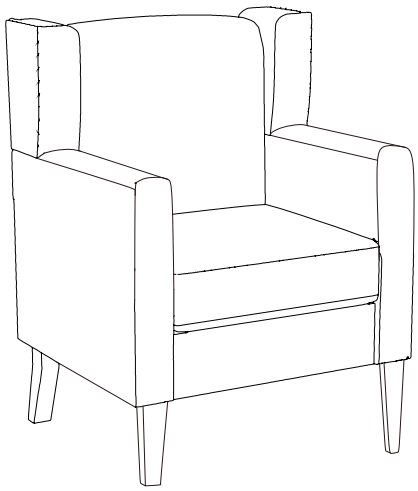

PARTS LIST

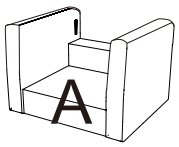

x1



x1

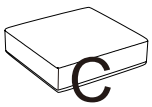

x1



x1



x1

HARDWARE LIST

1	 5/16x50mm	x8	2	 19mm	x8	3	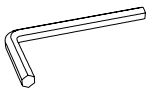 M5*40mm*100mm	x1	4 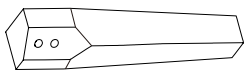	x2	5 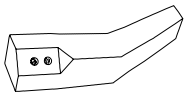	x2

BEFORE ASSEMBLY

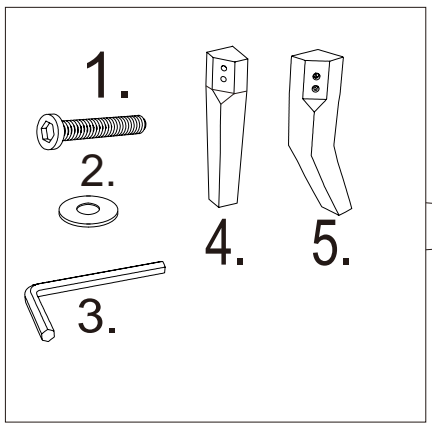

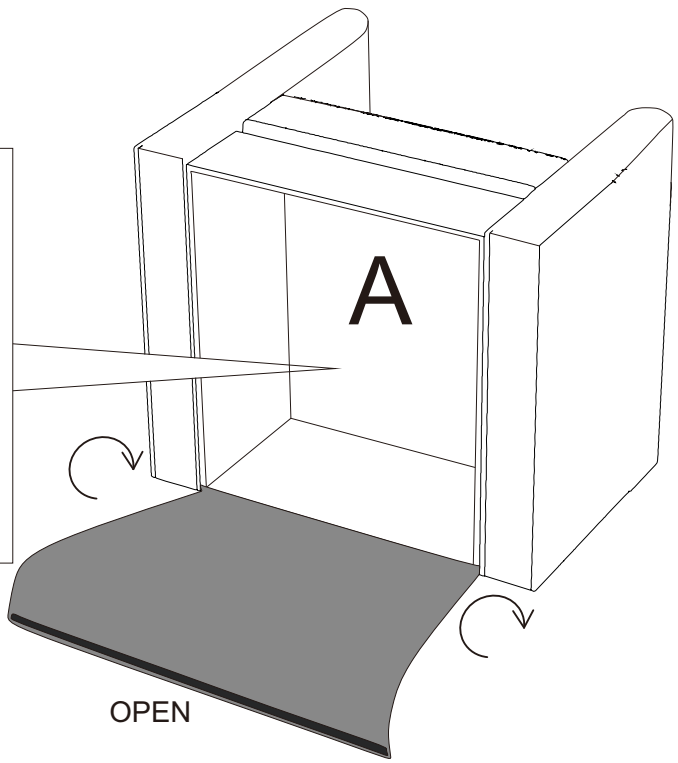

Step1

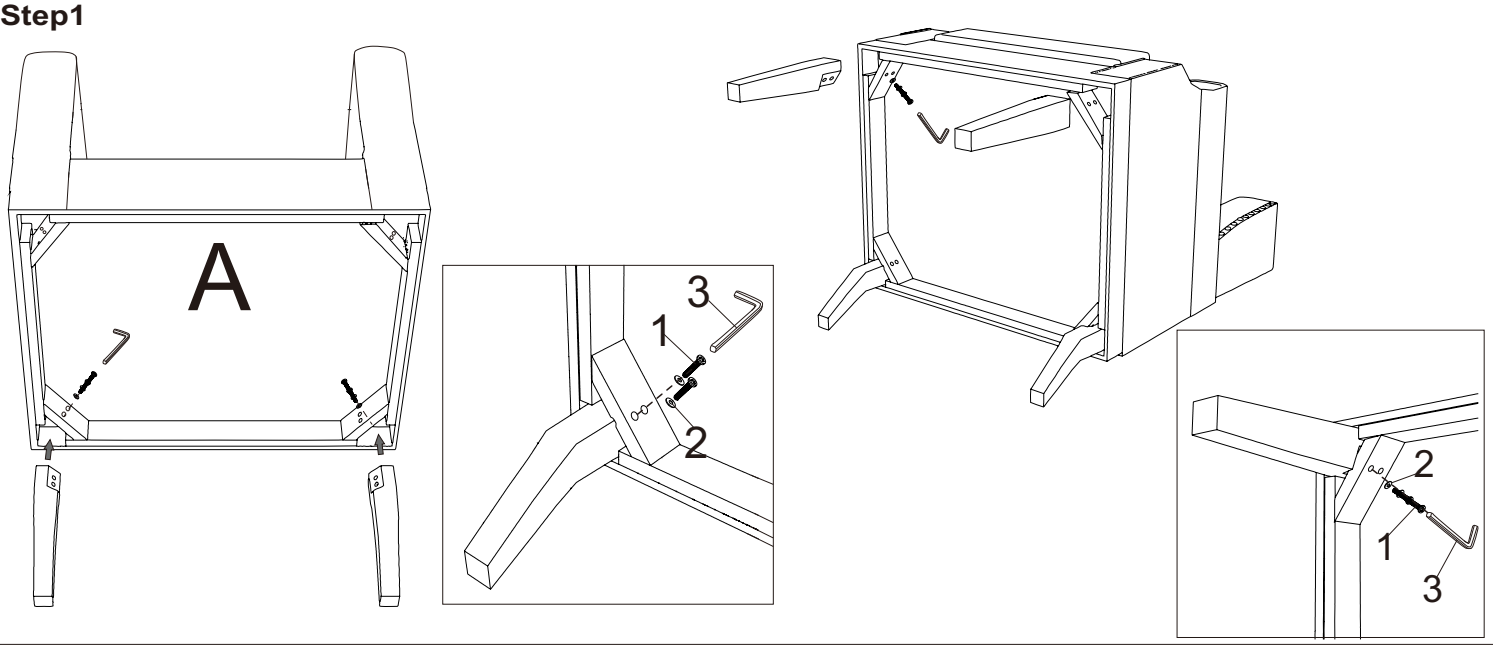

Step2

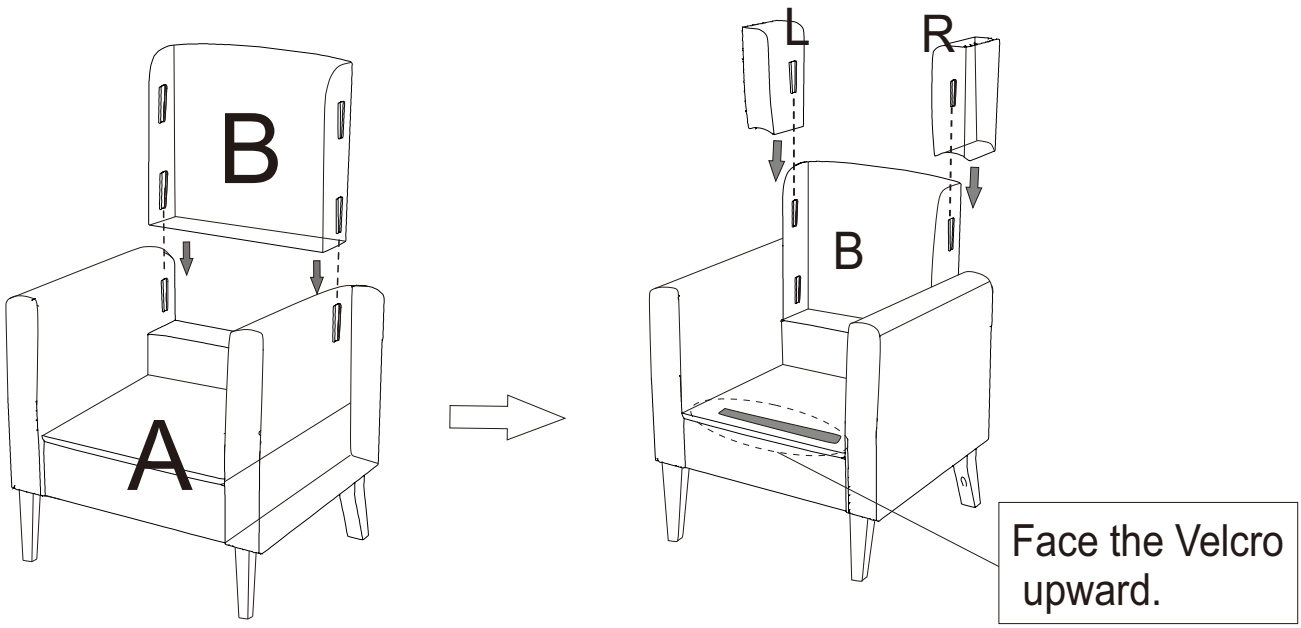

Step5

