ASSEMBLY INSTRUCTIONS

MODEL : **HMZ-KWC-MFC6008-WN**

Before you begin, please follow assembly instructions carefully, then follow them step by step.

Read instruction carefully . See Furniture Parts list and Hardware List for guidance . Be sure you have all parts before you start assembling .
Place and assemble furniture on a clean flat soft surface , such as carpet or rug to pervent being scratched .

PART LIST		QTY
1	TOP & BOTTOM PANEL	2 PCS
2	SIDE PANEL (L)	1 PC
3	SIDE PANEL (R)	1 PC
4	SHELF PANEL	1 PC
5	BACK PANEL	1 PC
6	DOOR PANEL (L)	1 PC
7	DOOR PANEL (R)	1 PC

HARDWARE		
A	MINI FIX A1 A2 A3	16 SETS
B	M8 X 30MM WOOD DOWEL	18 PCS
C	ALLEN KEY M4	1 PC
D	M3.5 X 16MM C.B SCREW	16 PCS
E	M4 X 32MM C.B SCREW	4 PCS
F	METAL SHELF SUPPORT	4 PCS
G	5/8 HINGES	4 PCS
H	PVC HANDLE 525-192	2 PCS
I	STICKER	4 PCS
J	WALL PLUG (8 x 2") J1 J2	4 SETS

SELF-PREPARED TOOLS: Tools below are NOT included in package.

SCREWDRIVER

HAMMER

POWER DRILL

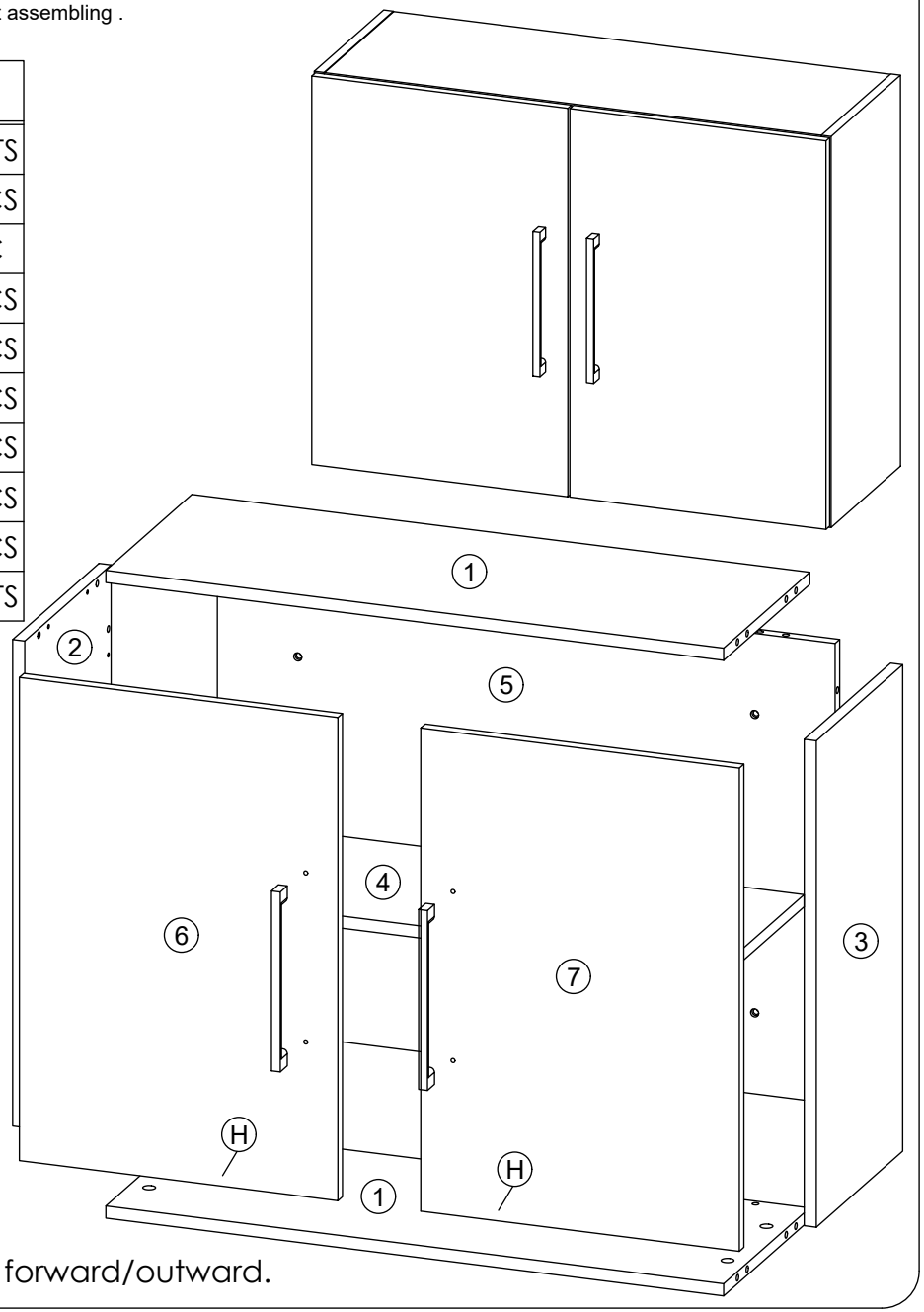

Reminder:

Please ensure that all surfaces and edges with colours/laminations are facing forward/outward.

ASSEMBLY INSTRUCTIONS

MODEL : **HMZ-KWC-MFC6008-WN**

STEP 1

- Insert hardware **A1** onto panel **(5)**.
  (Repeat 8 times.)
- Insert hardware **A2** onto panel **(2)** and **(3)**.
  (Repeat 12 times.)
- Insert hardware **B** onto panel **(5)**.
  (Repeat 10 times.)

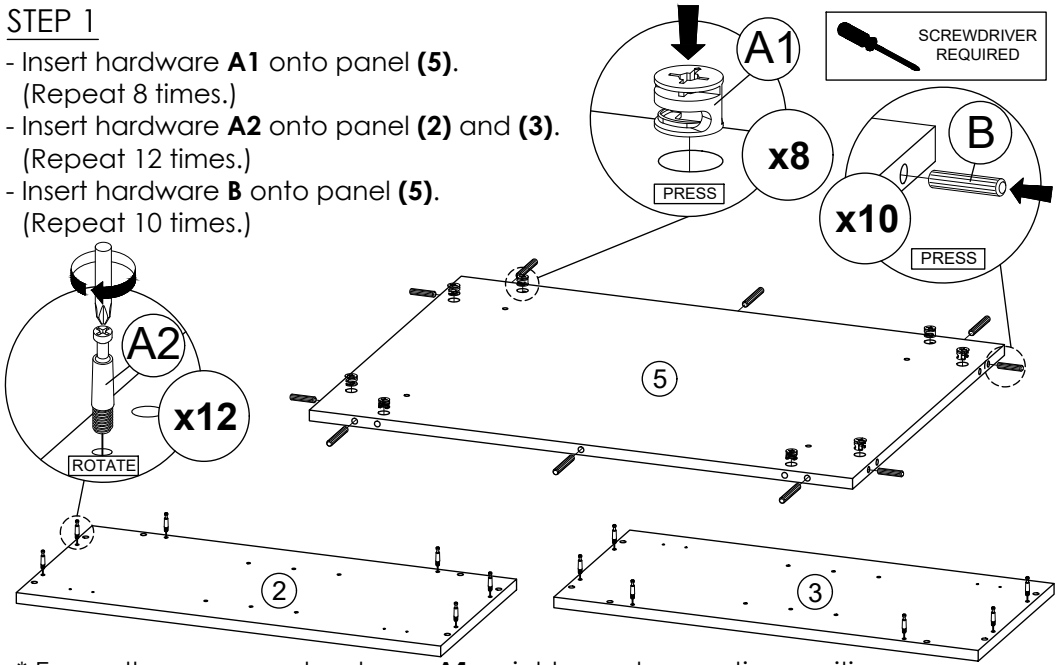

* Ensure the arrows on hardware **A1** point towards mounting positions.

STEP 2

- Insert hardware **A1** onto panel **(1)**.
  (Repeat 8 times.)
- Insert hardware **A2** onto panel **(1)**.
  (Repeat 4 times.)
- Insert hardware **B** onto panel **(1)**.
  (Repeat 8 times.)

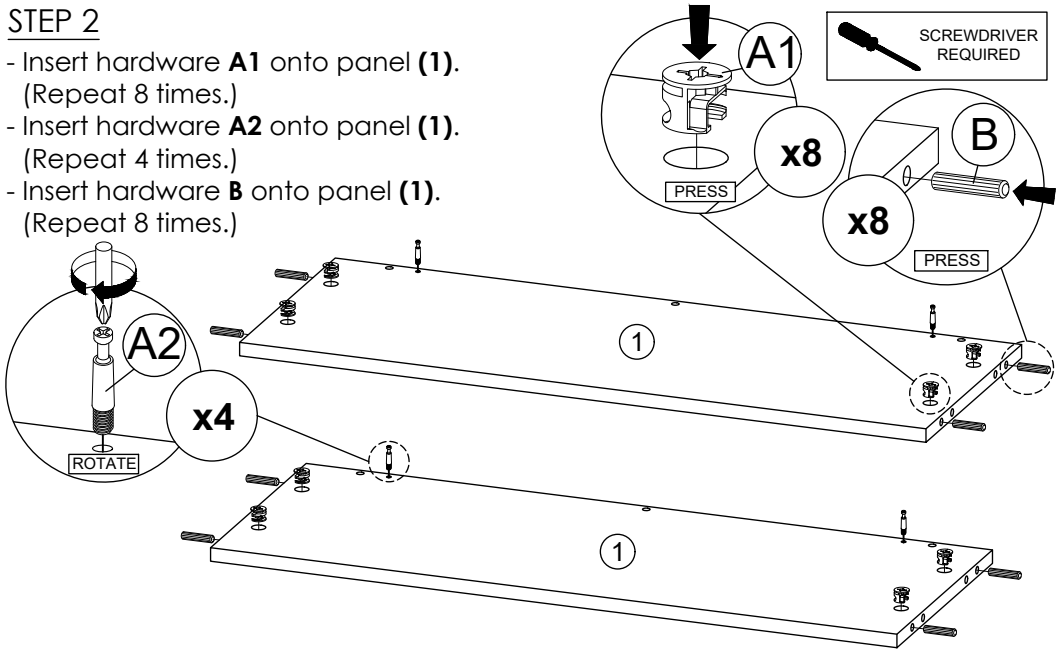

* Ensure the arrows on hardware **A1** point towards mounting positions.

STEP 3

- Attach panel **(1)** to panel **(5)**.
- Insert all hardware **A2** into **A1**.
- Rotate all **A1** until tight.
- Apply **A3** onto all **A1**.
  (Repeat 4 times.)

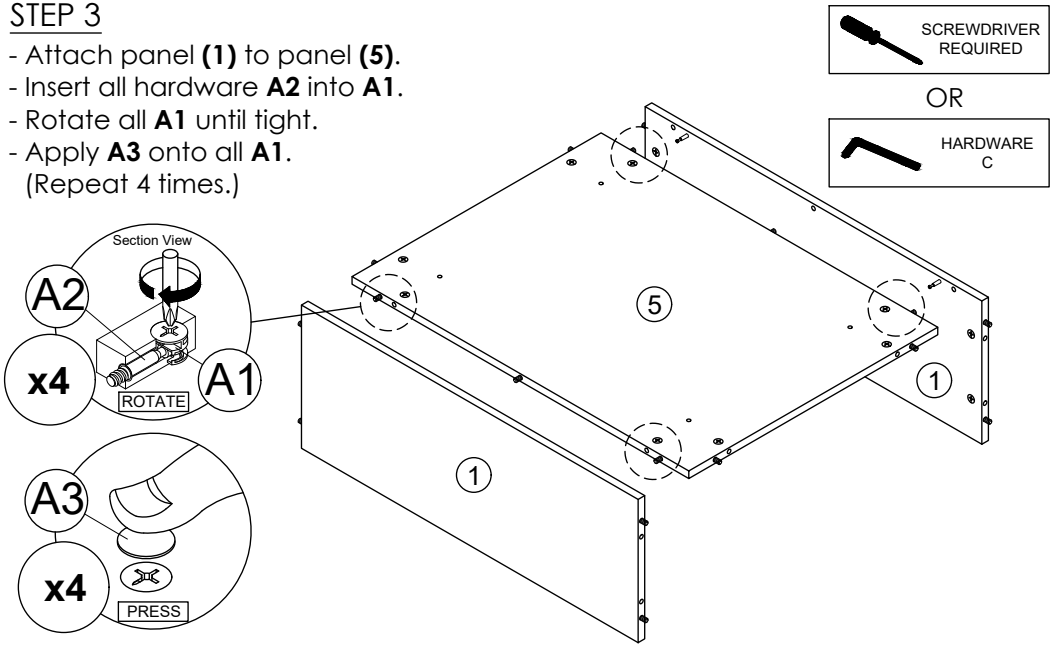

* In this step hardware **A1**, **A2** and **B** are pre-inserted.

STEP 4

- Attach panel **(2)** and **(3)** to panel **(1)** and **(5)**.
- Insert all hardware **A2** into **A1**.
- Rotate all **A1** until tight.
- Apply **A3** onto all **A1**.
  (Repeat 12 times.)

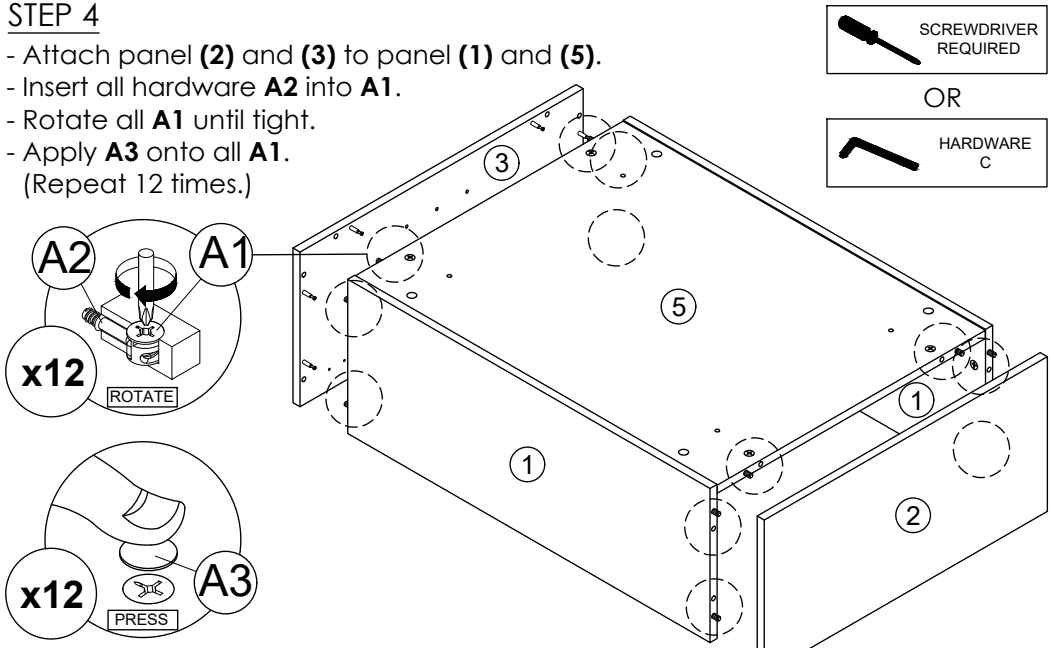

* In this step hardware **A1**, **A2** and **B** are pre-inserted.

ASSEMBLY INSTRUCTIONS

MODEL : **HMZ-KWC-MFC6008-WN**

STEP 5

Insert hardware **F** into mounting positions on panel **(2)** and **(3)** by hand.
(Repeat 4 times.)

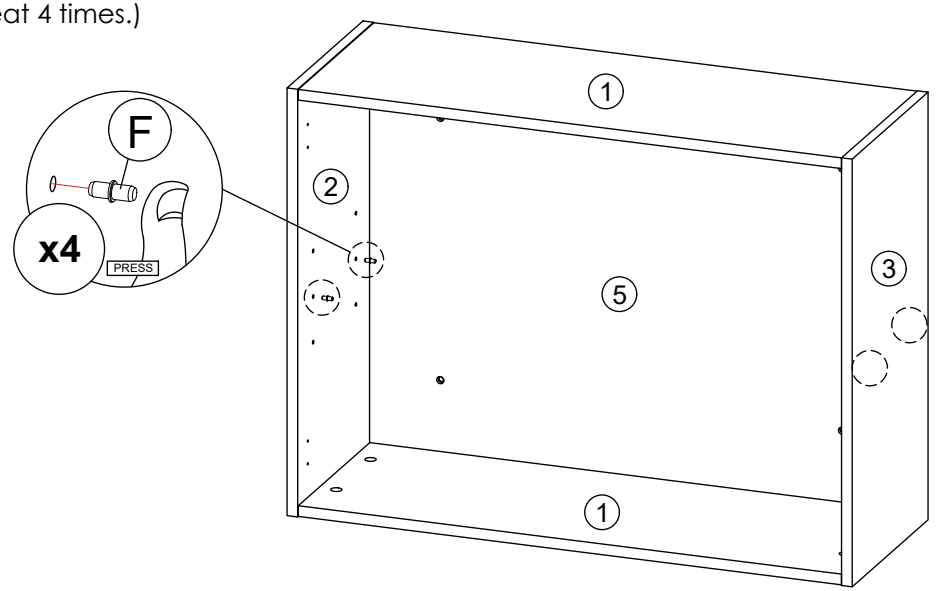

STEP 6

Assemble the panel **(4)** into between panel **(2)** and **(3)**.
(Repeat 1 times.)

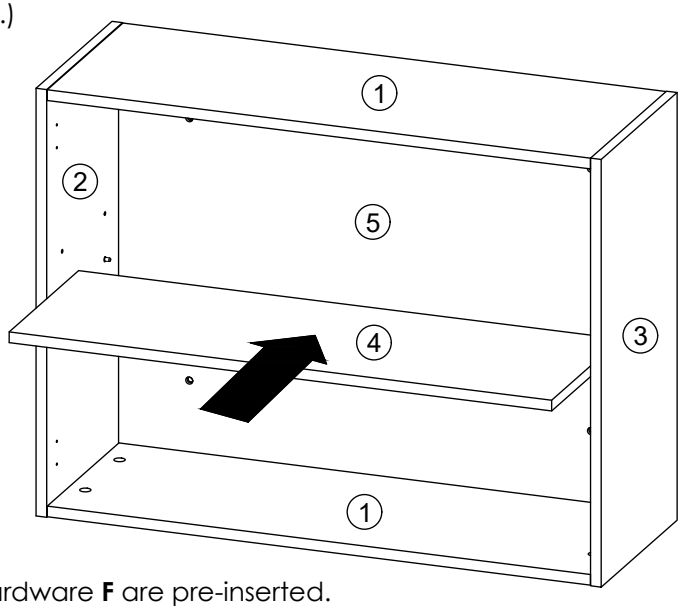

* In this step hardware **F** are pre-inserted.

STEP 7

SCREWDRIVER REQUIRED

- Fix hardware **G** onto panel **(6)** and **(7)** by using hardware **D**.
  (Repeat 2 times for each hardware.)
- Fix hardware **H** onto panel **(6)** and **(7)** by using hardware **E**.
  (Repeat 2 times for each hardware.)

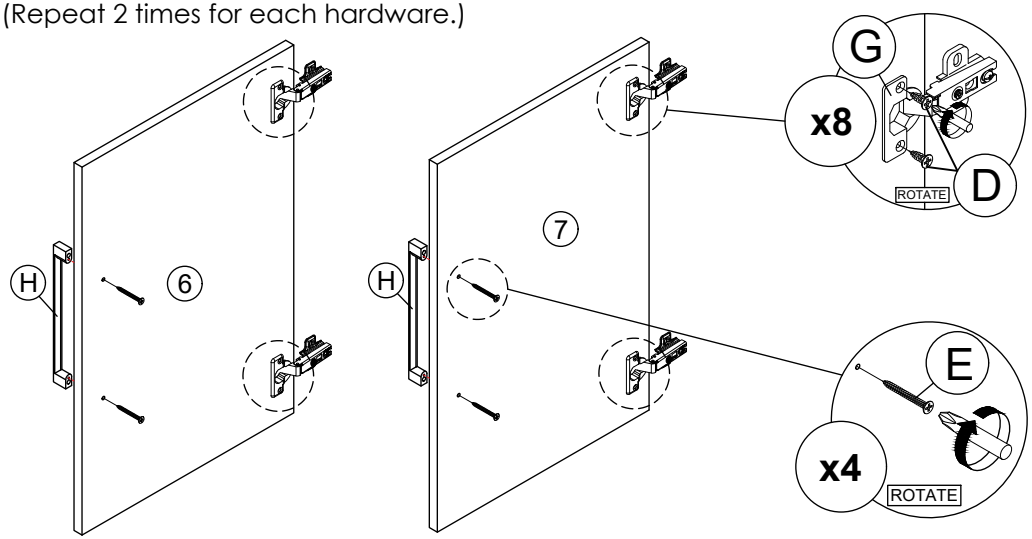

STEP 8

SCREWDRIVER REQUIRED

- Fix hardware **G** into panel **(2)** and **(3)** by using hardware **D**.
  (Repeat 2 times for each hardware.)
- Tighten or loosen the screw to adjust position of panel **(6)** and **(7).**
  (Do only when needed.)

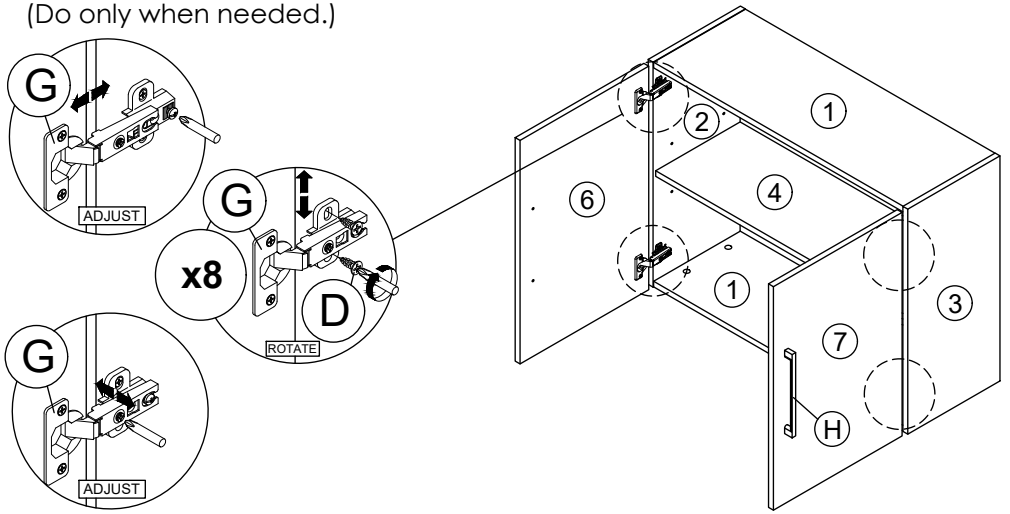

* In this step hardware **G** have been assembled in panel **(6)** and **(7)**.

ASSEMBLY INSTRUCTIONS

MODEL : **HMZ-KWC-MFC6008-WN**

STEP 9

Mark the holes on the wall by using the pencil **(not supplied)**.
(Repeat 4 times.)
You can mark these points in as below:
1) Move the Cabinet back to the wall.
   Mark four points same height as Cabinet on the wall.
2) Measure the height of the hole on panel **(5)** with ruler/measuring tape and mark on wall to keep them accurate and same height.

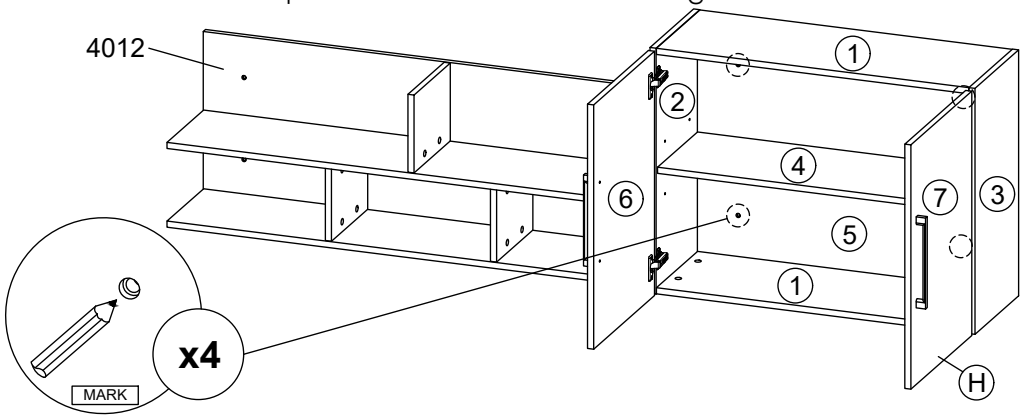

STEP 10

POWER DRILL REQUIRED

Use the power drill to drill the marking point on the wall.

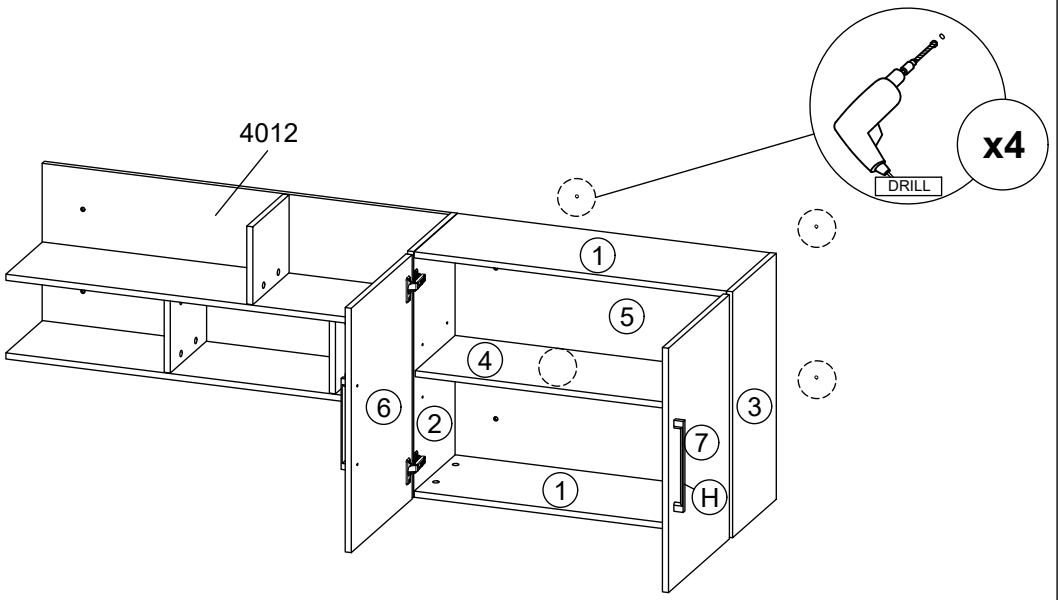

STEP 11

SCREWDRIVER REQUIRED

- Hit hardware **J2** into panel **(5)** and the wall.
  (Repeat 4 times.)
- Assemble panel **(5)** to the wall by using hardware **J1** and **J2**.
  (Repeat 4 times.)

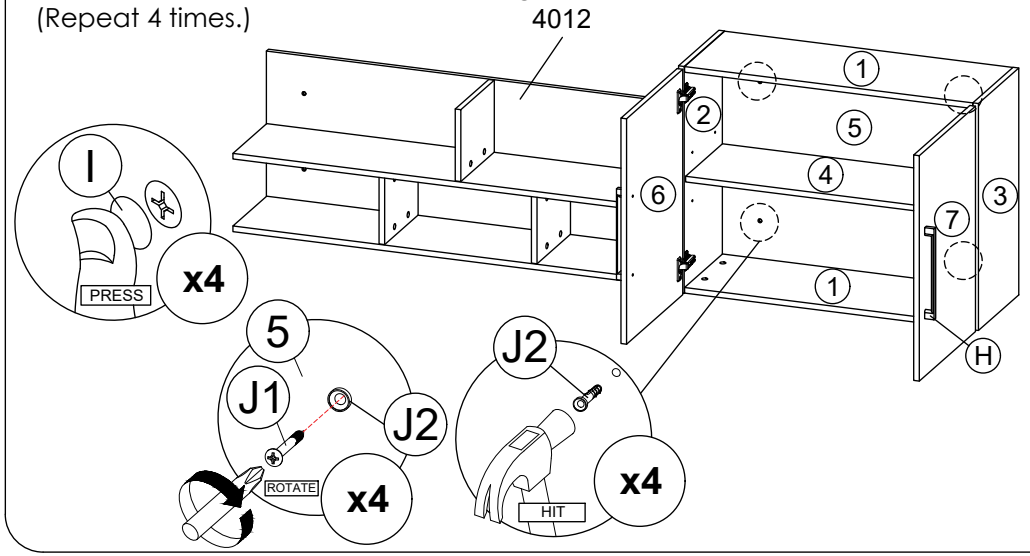

STEP 12

