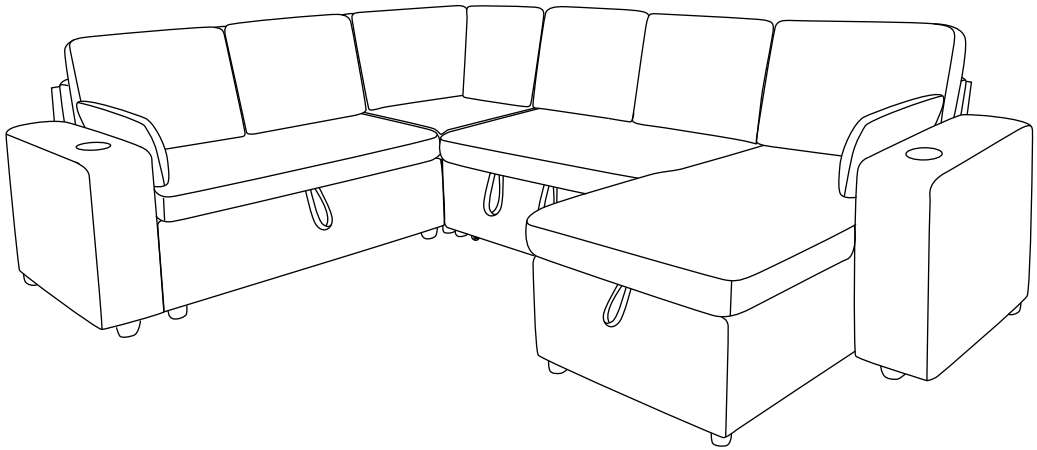

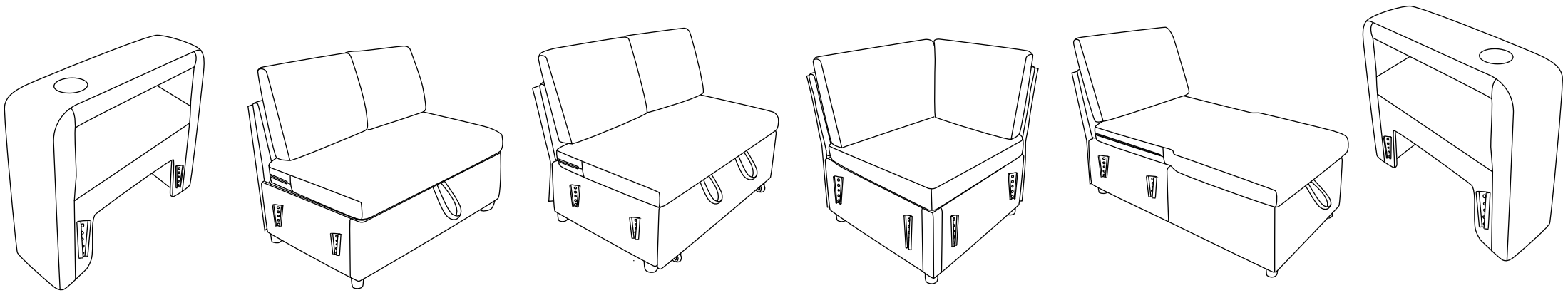

If you have any advice or problem
please contact us:wxservice@5xfuture.com

This product consists of multiple packages. Please wait patiently

Multiple Combinations Available Based on Your Purchase

Box-A

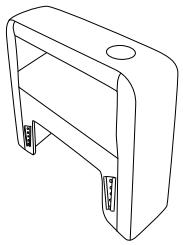

Box-B

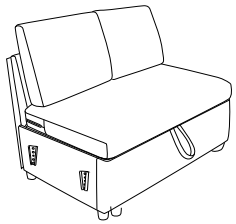

Box-C

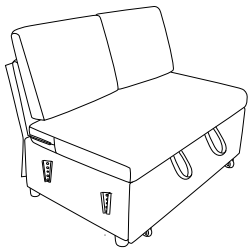

Box-D

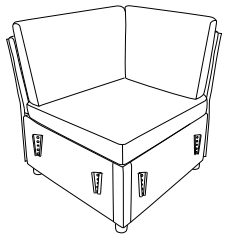

Box-E

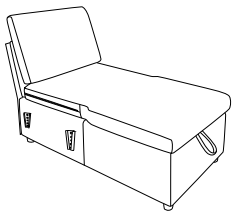

Configuration 1　A+C　A+B （pp.24）

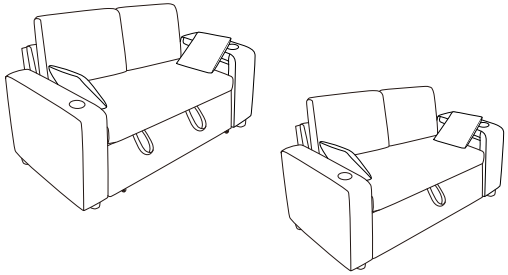

Configuration 2：A+C+E（pp.25）

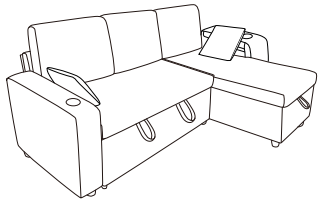

Configuration 3：A+C+E+E（pp.26）

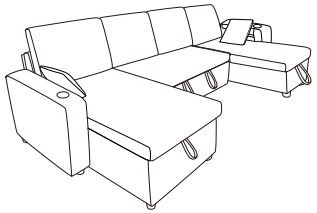

Configuration 4：A+C+C（pp.27）

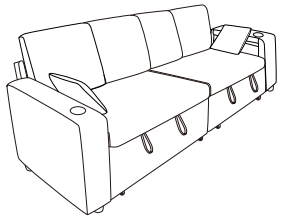

Configuration 5：A+B+C+D（pp.28）

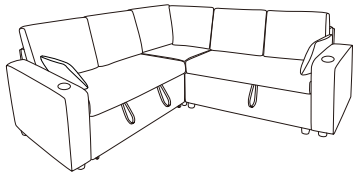

Configuration 6：A+B+C+D+E（pp.29）



Configuration 7：A+B+C+D+E+E （pp.30）

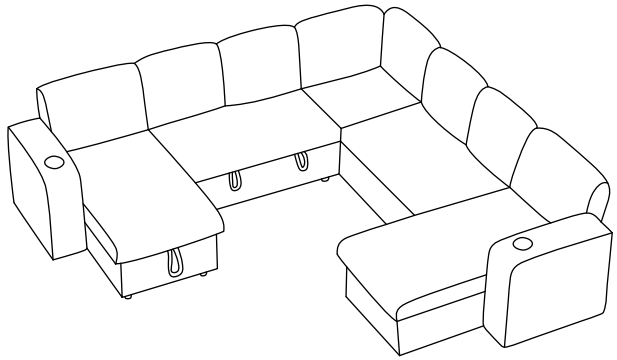

Configuration 8：A+B+C+C+D+D（pp.31）

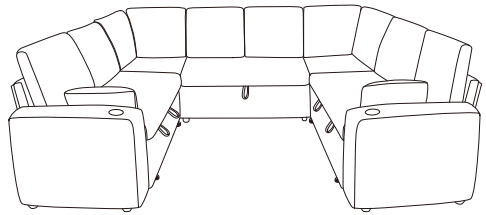

Box-A

A-L 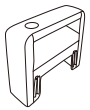 Facing left armx1

A-R 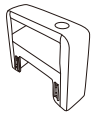 Facing right armrest x1

Y  Pillow x2

F  Chargerx2

J  Feetx4

Box-B

H  Back Frame x1

K  pull out seat cushionx1

C  Feet x4

O  Seaf Frame x1

M  Back Cushion x2

Box-C

H  Back Frame x1

L  pull out seat cushion x1

C  Feet x4

I 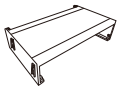 Seaf Frame x1

N  Pull out sofa tray frame x1

E  Universal wheel x4

M  Back Cushion x2

T  Limiting pulley x2

K  pull out seat cushion x1

G  self-tapping screw x12

Box-D

U  Back Frame x2

S 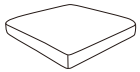 Seat Cushionx1

C  Feet x4

P 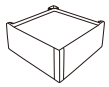 Seaf Frame x1

Q 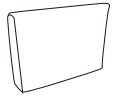 Back Cushion x1

R  Back Cushionx1

Box-E

U  Back Frame x1

W  Seat Cushionx1

C  Feet x4

V  Seaf Frame x1

B  Back Cushionx1

wxservice@5xfuture.com

How to Install Box-A

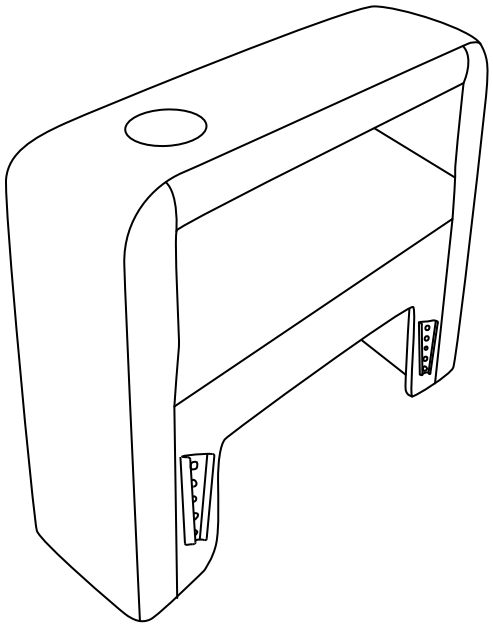

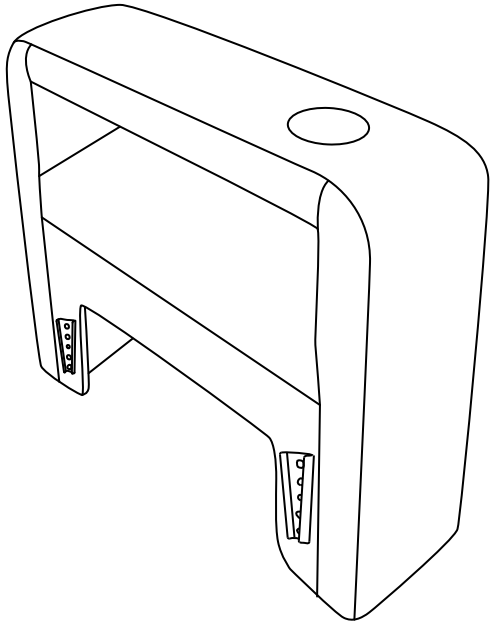

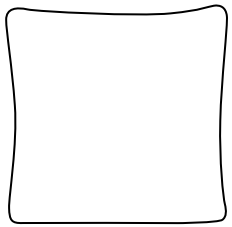

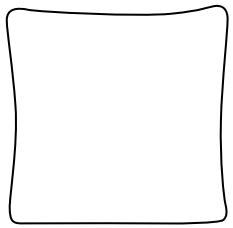

Components List

A-L 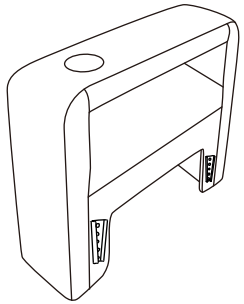 1pc	A-R 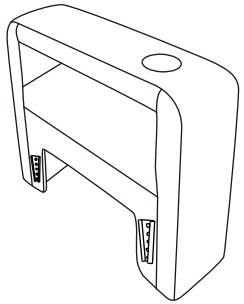 1pc	Y 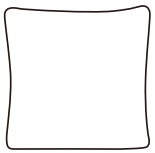 2pcs	J 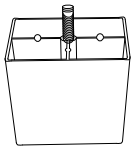 4pcs	F 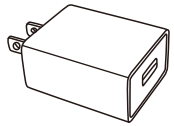 2pcs

wxservice@5xfuture.com

STEP 1

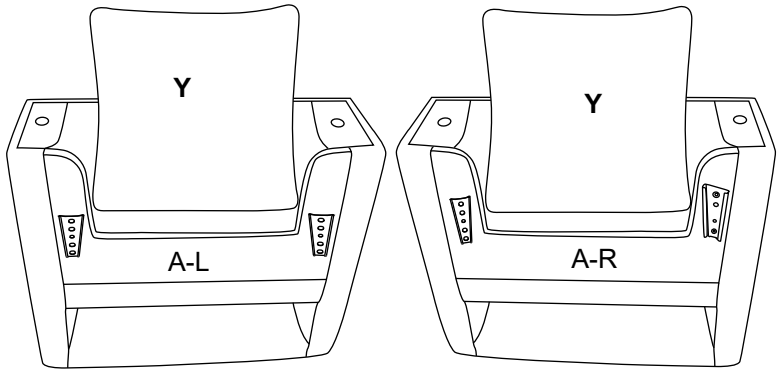

STEP 2

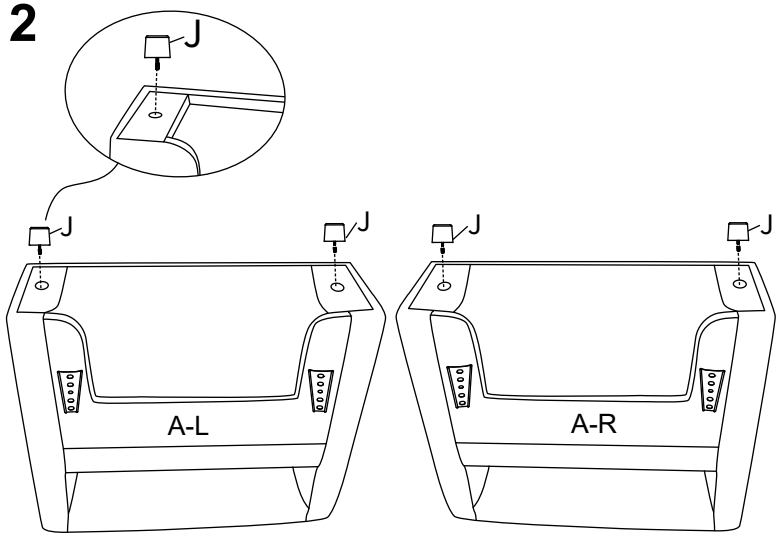

Cx4

STEP 3

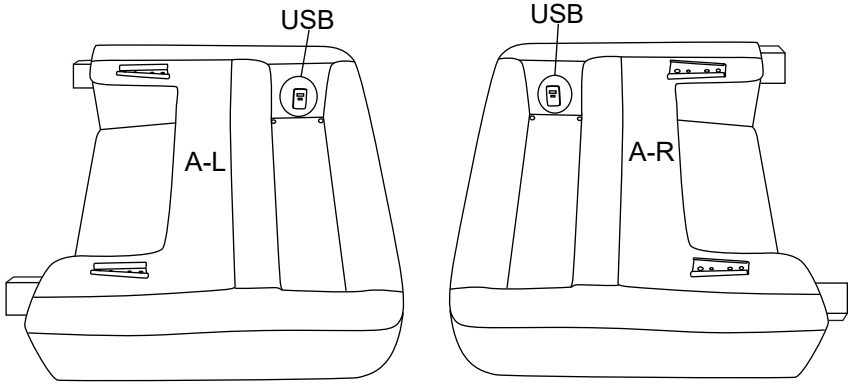

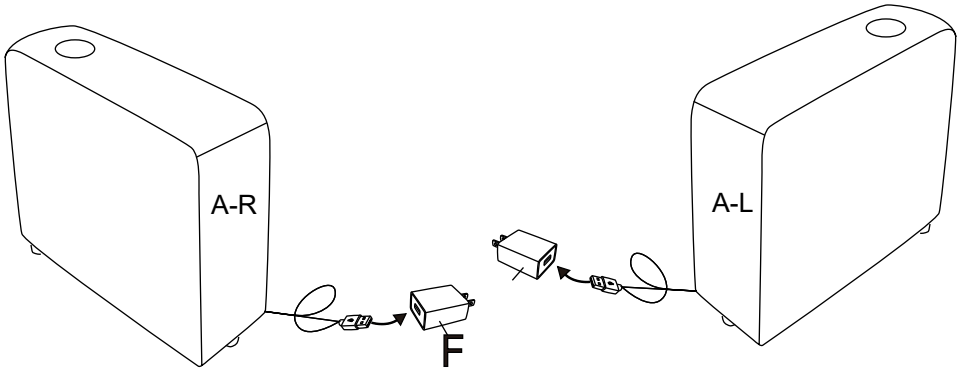

Please connect the armrest plug board to the power cord.

The data cable can be extended up to two meters when pulled out

Fx2

How to Install Box-B

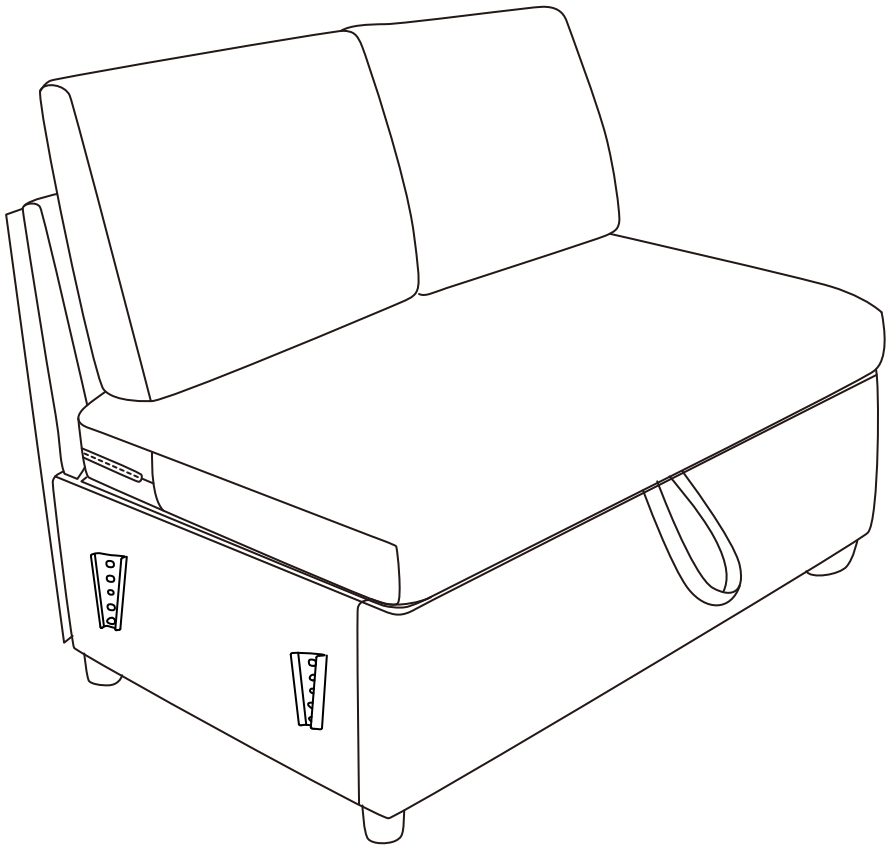

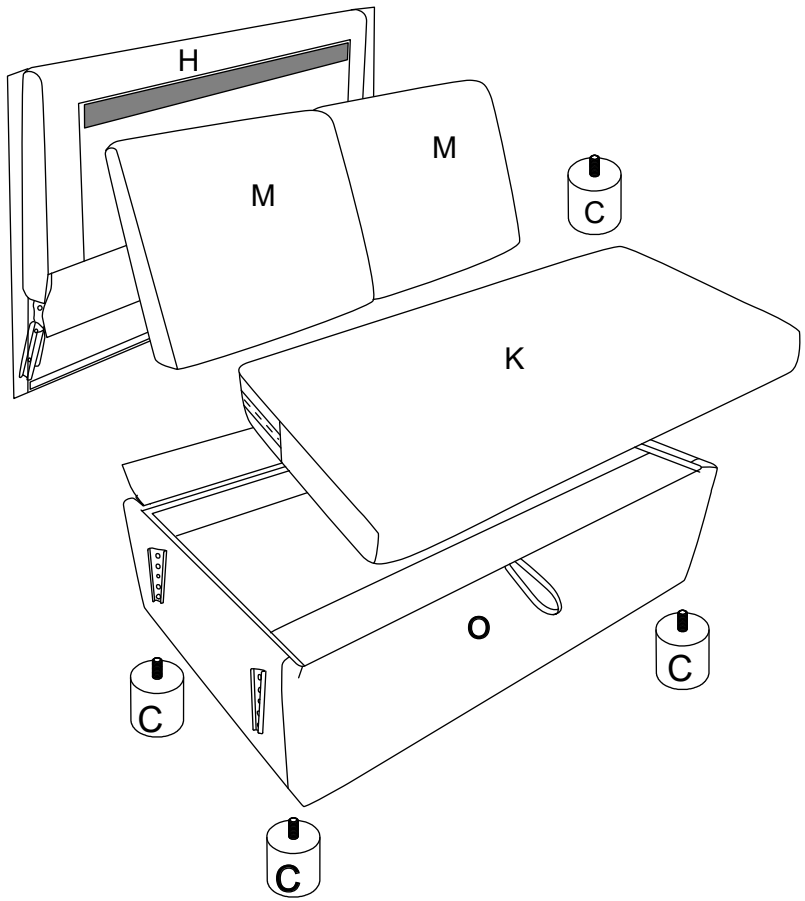

Components List

H 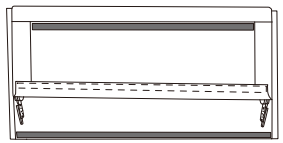 1pc	O 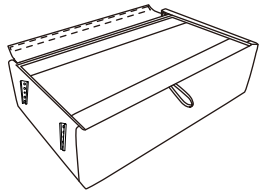 1pc	k  1pc	M 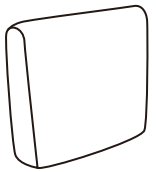 2pcs	C 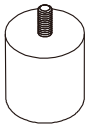 4pcs

wxservice@5xfuture.com

STEP 1

There are metal fittings for positioning on both sides.
Please horizontally slide the backrest out and operate with patience

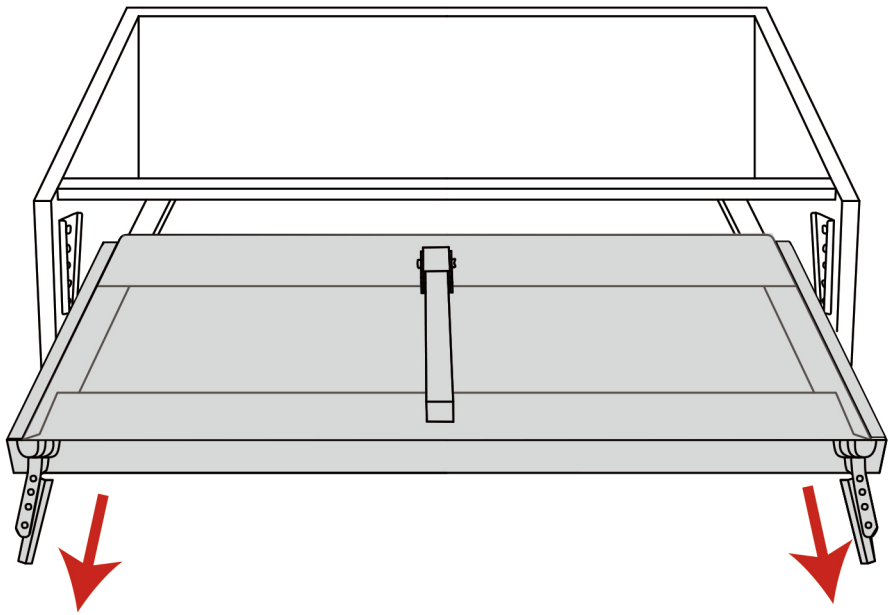

Il y a des deux côtés de la carte d'argent,
s'il vous plaît déplacer le dos horizontalement,
le fonctionnement patient.

Auf beiden Seiten gibt es Hardware-Karten,
bitte bewegen Sie den Rücken horizontal, geduldig zu bedienen.

STEP 2

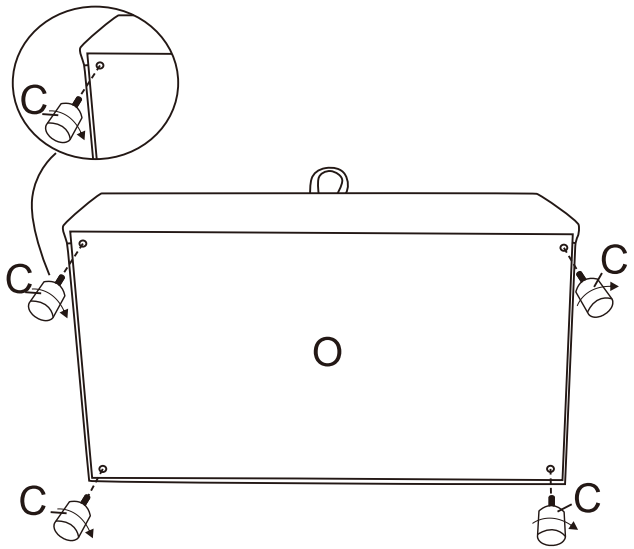

	Cx4

STEP 3

Align the insert piece and insert it horizontally.

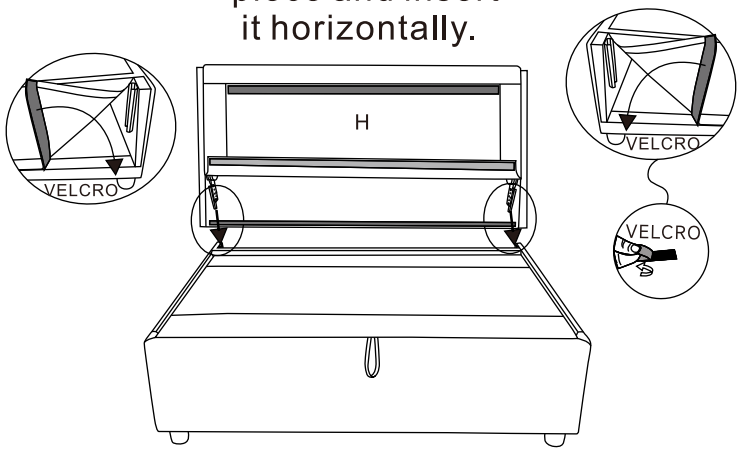

STEP 4

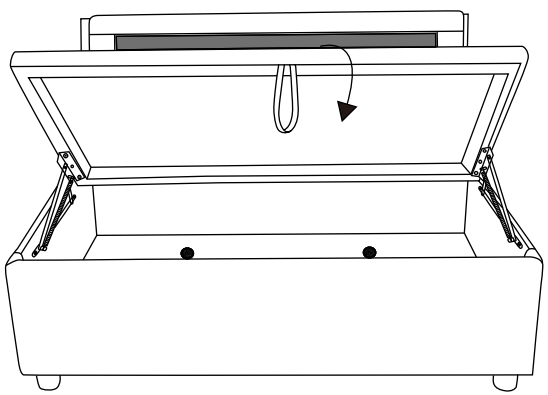

STEP 5

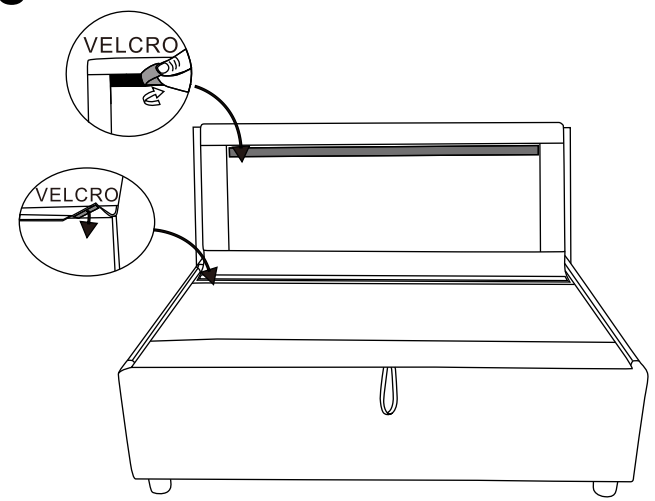

STEP 6

Take the cushion out of the compression package. Let it expand for 48 hours to reach full size. Then assemble following the instructions.

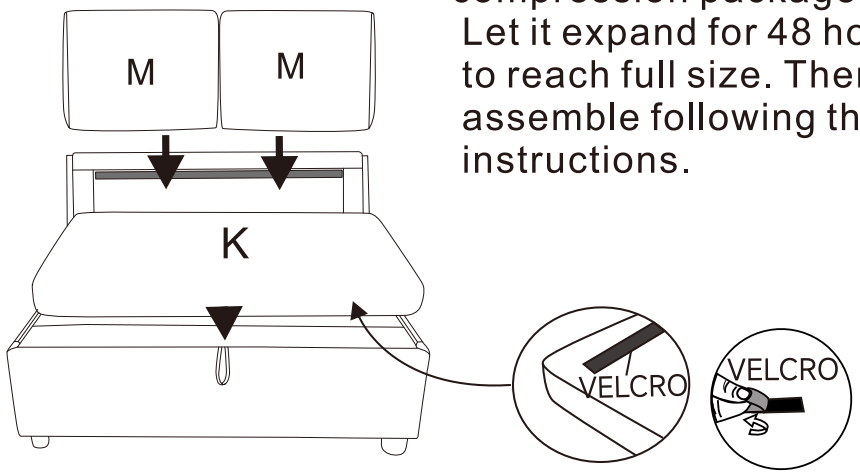

STEP 7

Press the silver button to open and retract

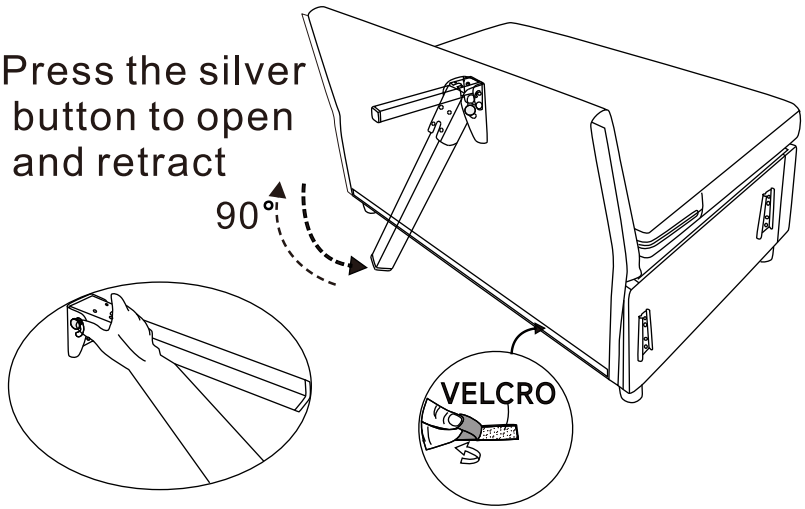

STEP 8

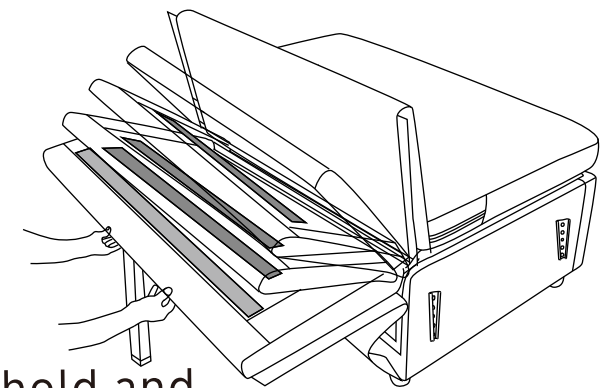

Please hold and adjust the gear with both hands.

STEP 9

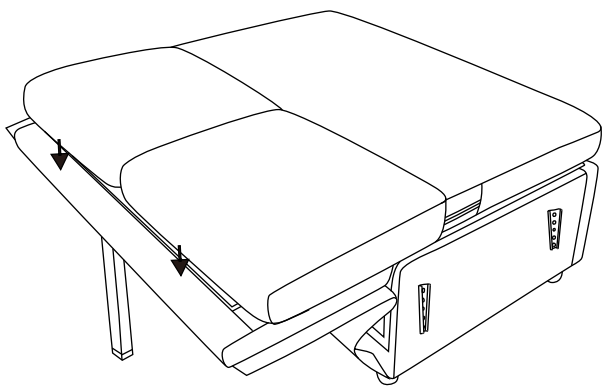

How to Install Box-C

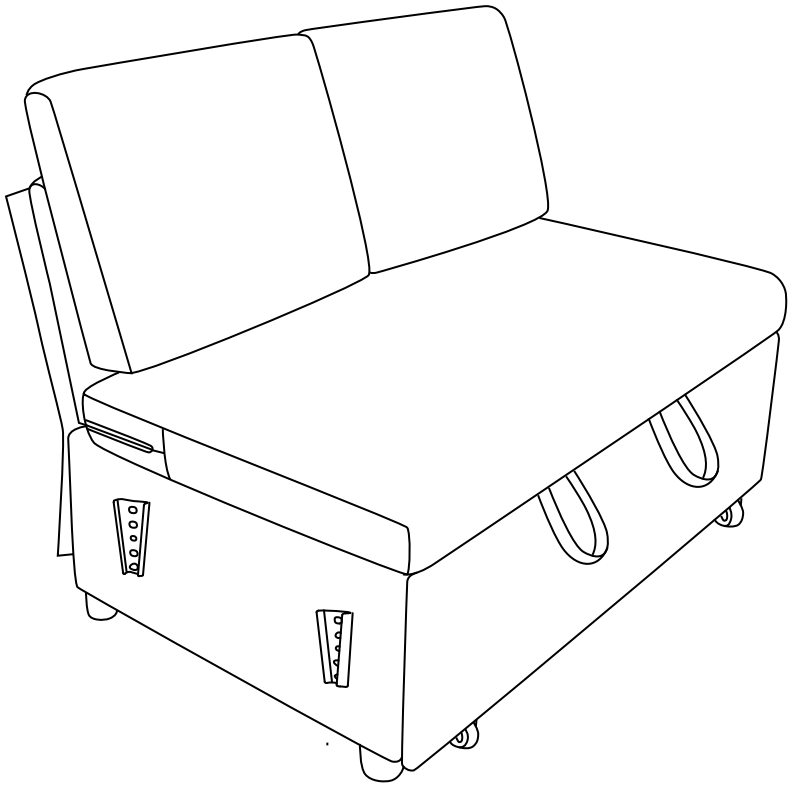

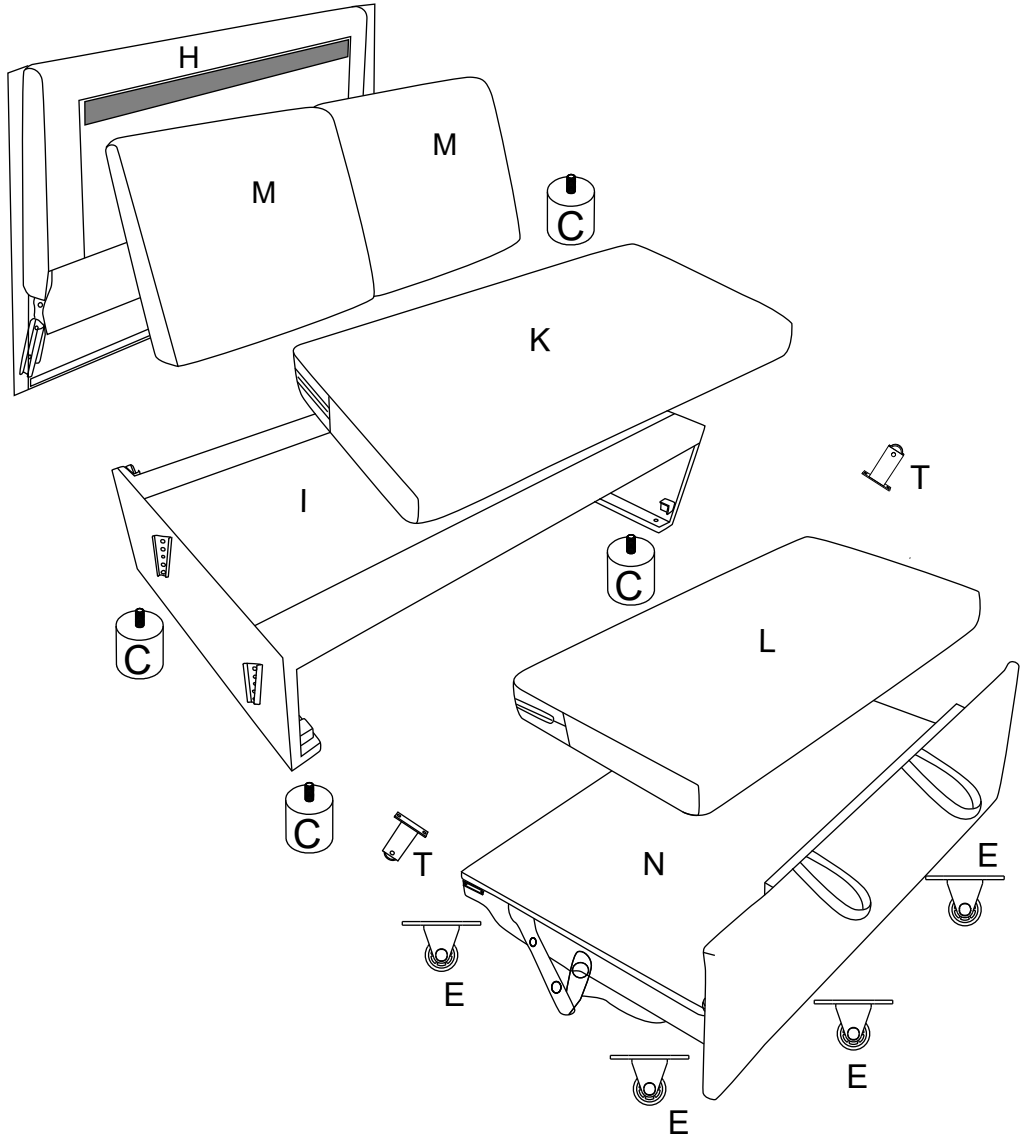

Components List

H 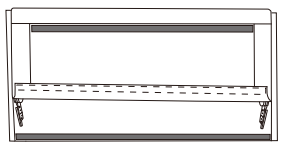 1pc	I 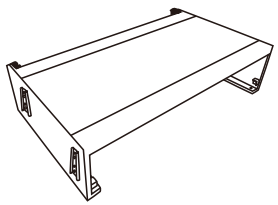 1pc	(k)  1pc	(L) 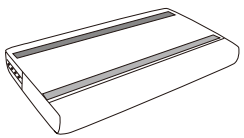 1pc	(M) 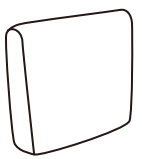 2pcs
(N) 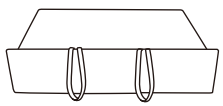 1pc	(C)  4pcs	(E) 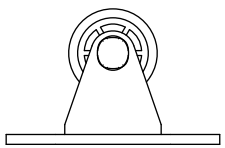 4 pcs	(T) 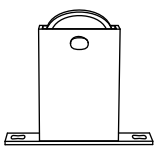 2pcs	(G) 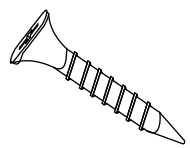 12pcs

wxservice@5xfuture.com

STEP 1

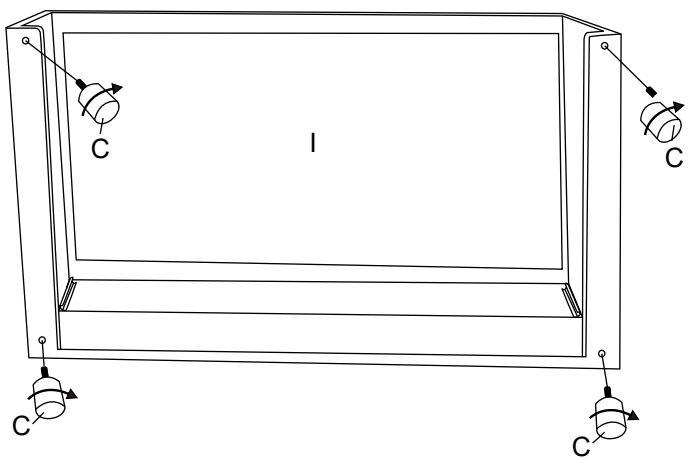

	Cx4

STEP 2

Align the insert piece and insert it horizontally.

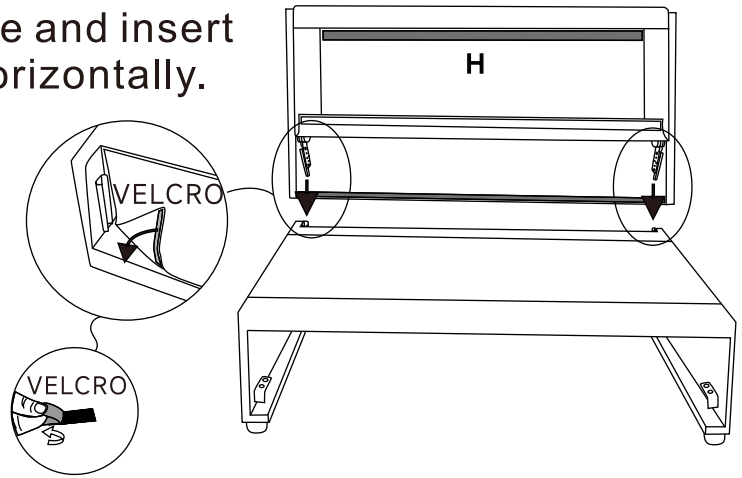

STEP 3

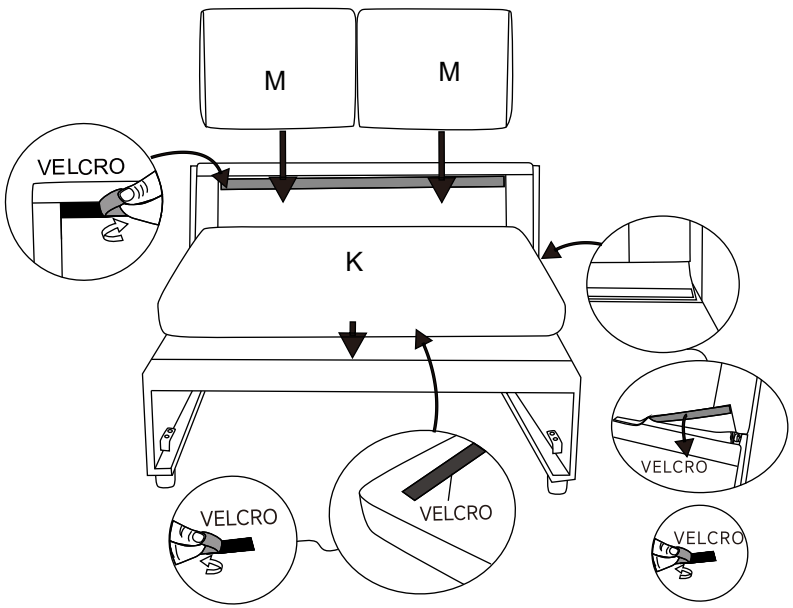

STEP 4

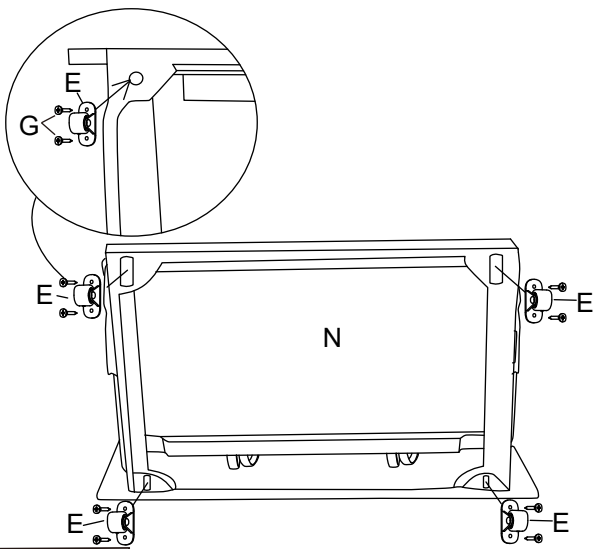

	EX4		Gx8

STEP 5

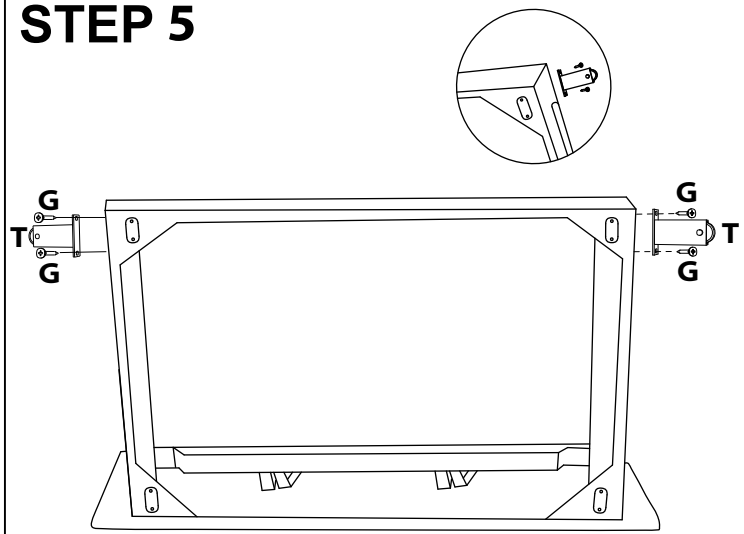

	Tx2		Gx4

STEP 6

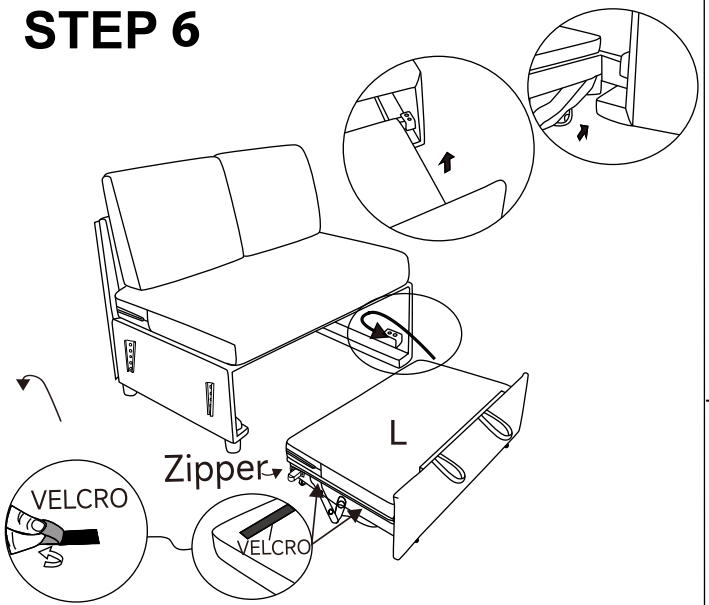

STEP 7

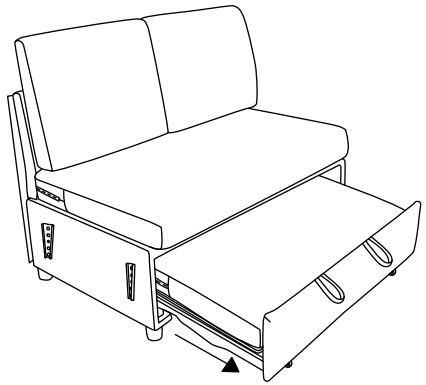

STEP 10

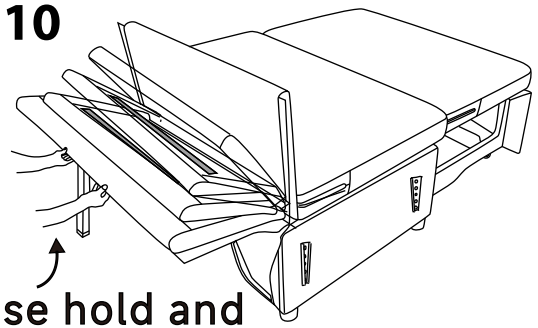

Please hold and adjust the gear with both hands.

STEP 8

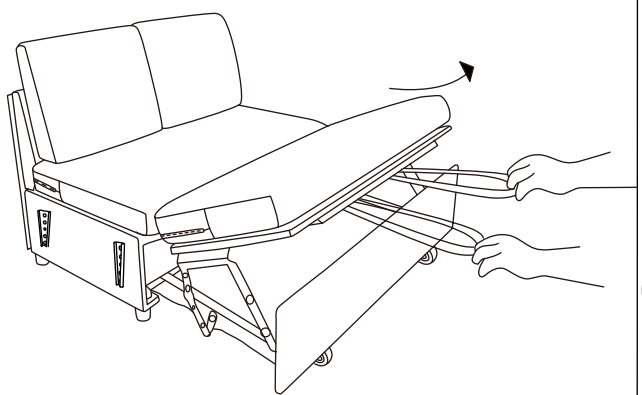

STEP 9

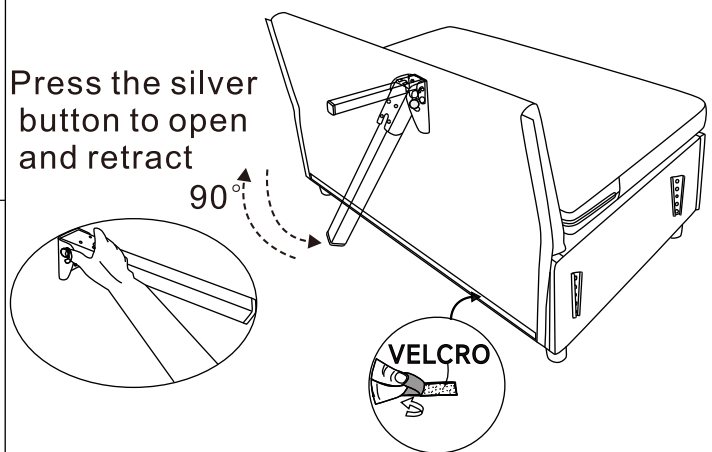

STEP 11

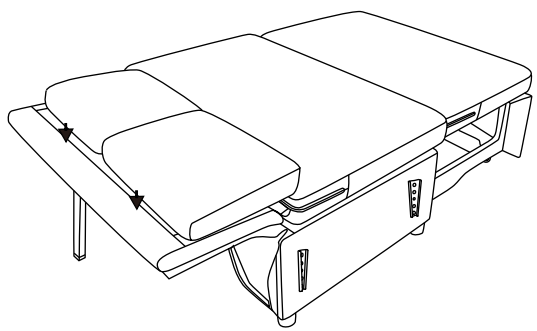

How to Install Box-D

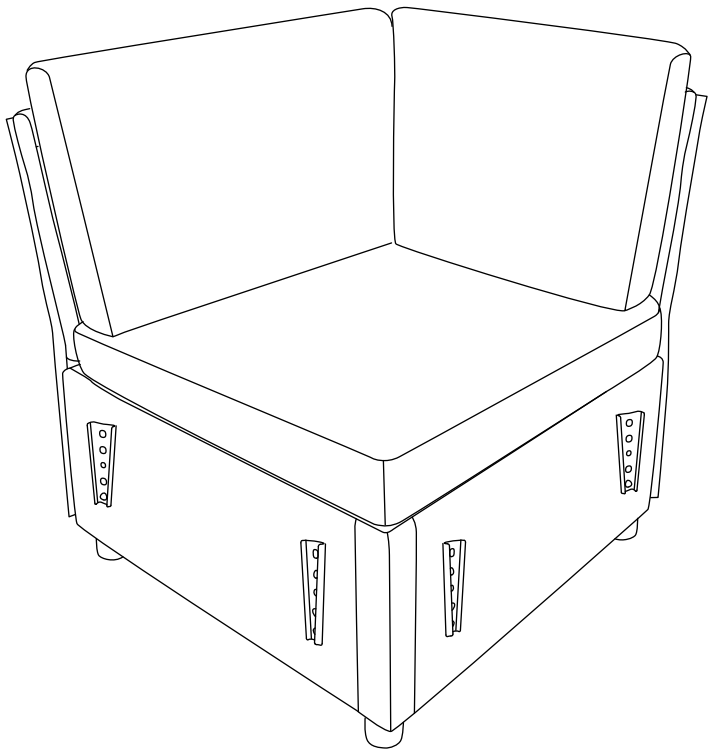

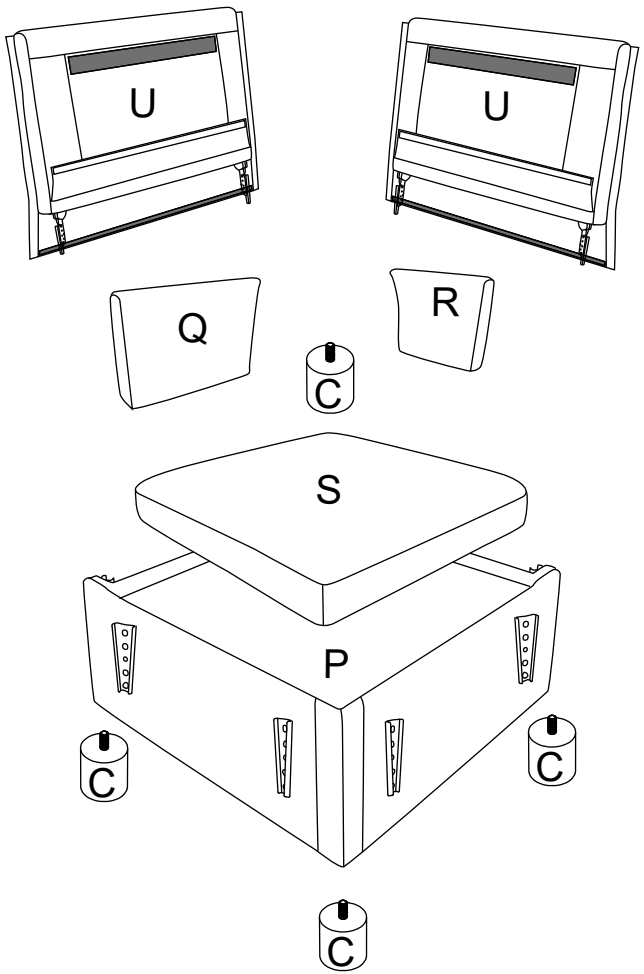

Components List

U 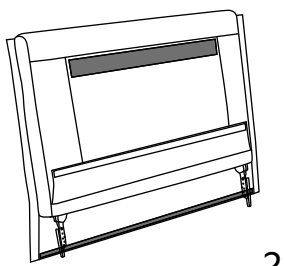 2pcs	P 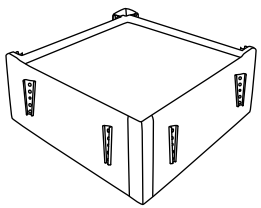 1pc	S 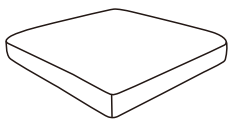 1pc	Q 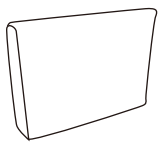 1pc	R 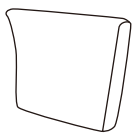 1pc
C  4pcs				

wxservice@5xfuture.com

STEP 1

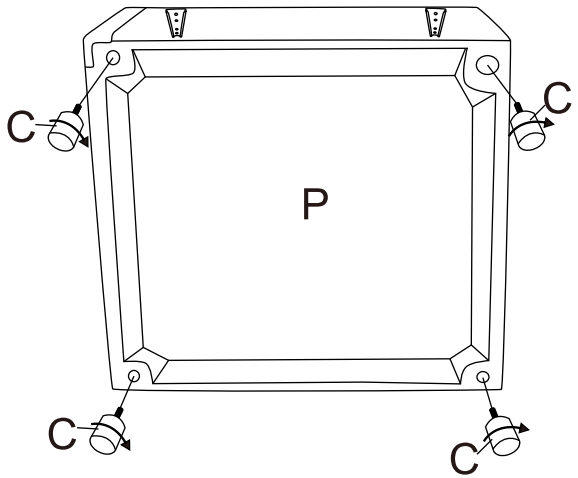

Cx4

STEP 2

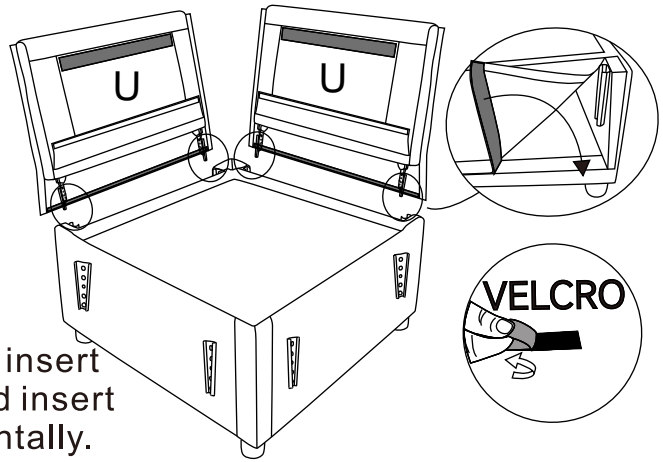

Align the insert piece and insert it horizontally.

STEP 3

Take the cushion out of the compression package. Let it expand for 48 hours to reach full size. Then assemble following the instructions.

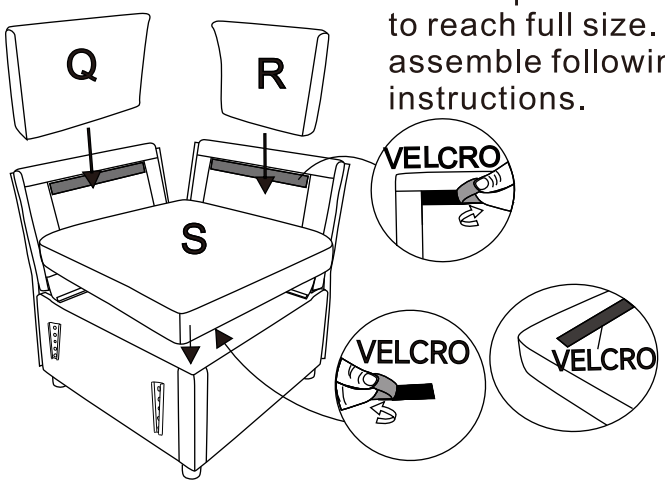

STEP 4

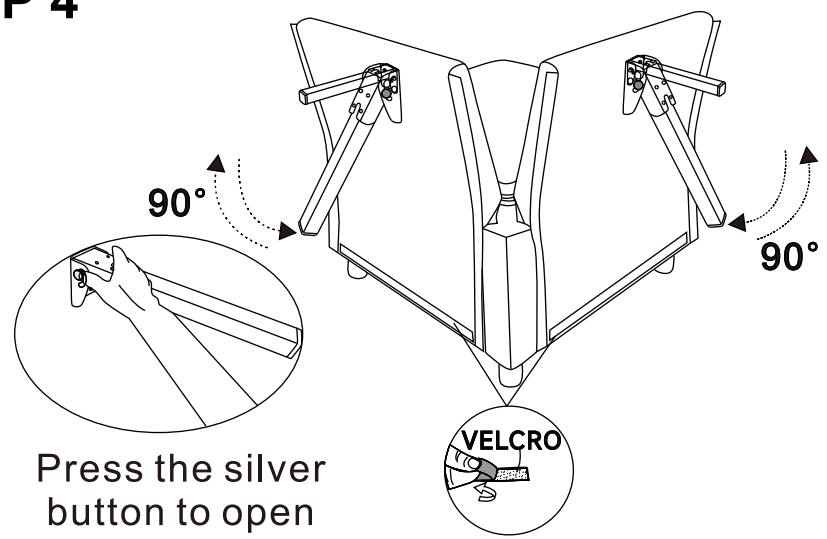

Press the silver button to open and retract

STEP 5

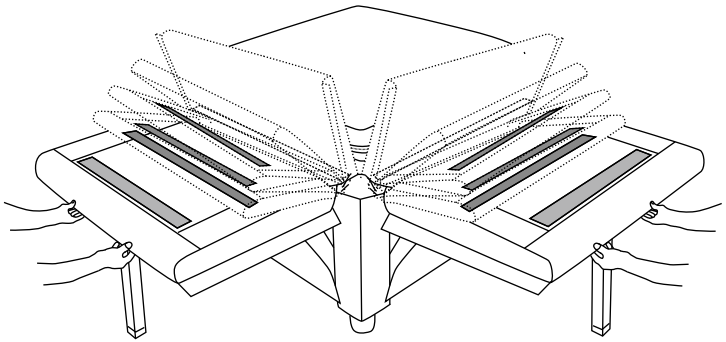

Please hold and
adjust the gear
with both hands.

STEP 6

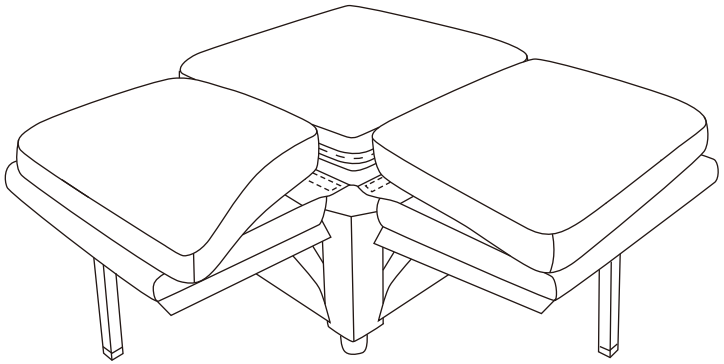

How to Install Box-E

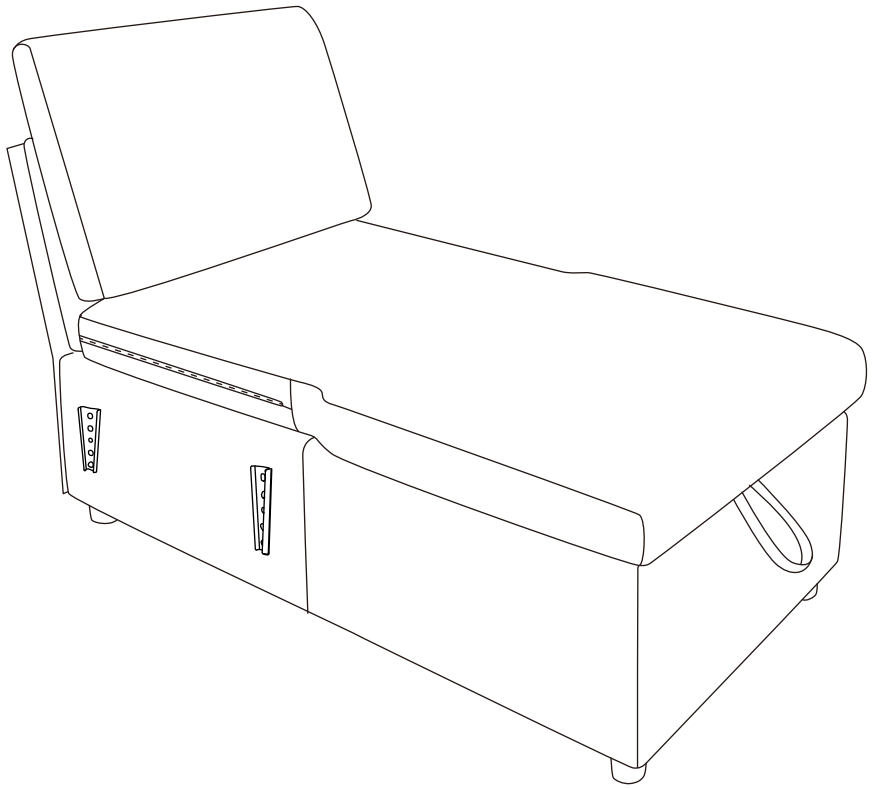

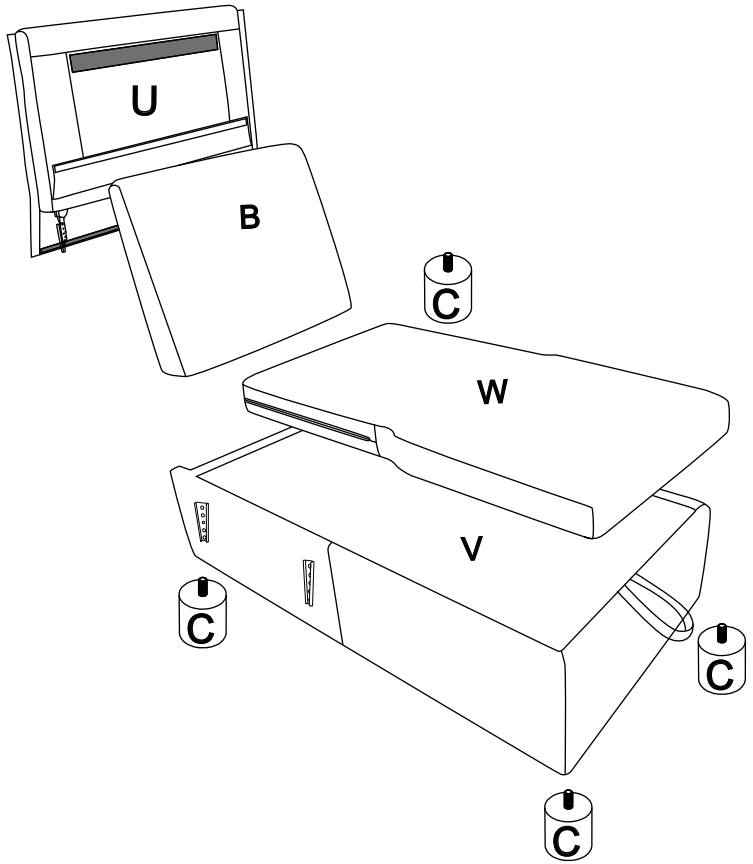

Components List

U 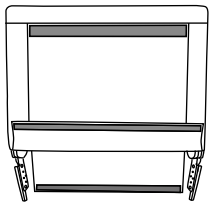 1pc	V 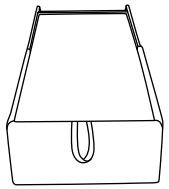 1pc	W 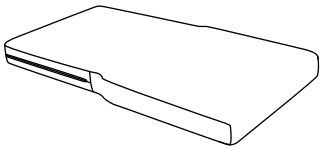 1pc	B 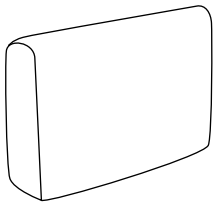 1pc	C 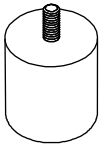 4pc

wxservice@5xfuture.com

STEP 1

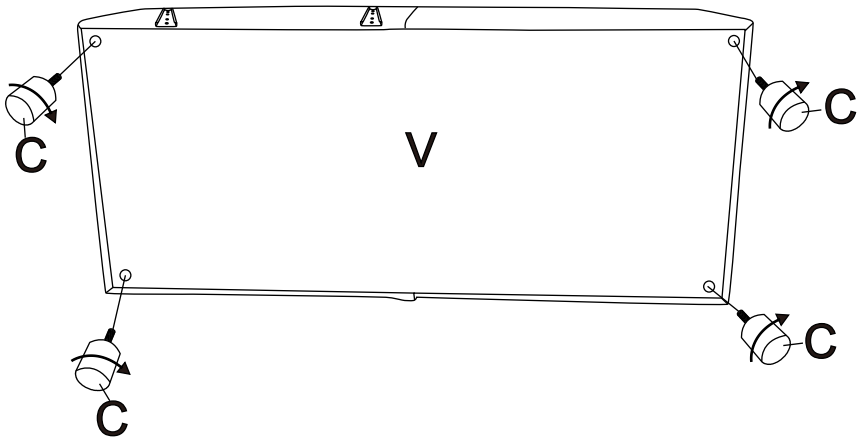

	Cx4

STEP 2

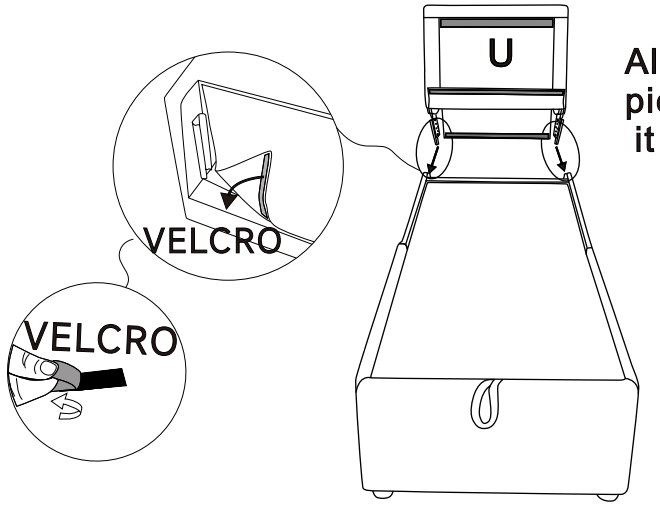

Align the insert piece and insert it horizontally.

STEP 3

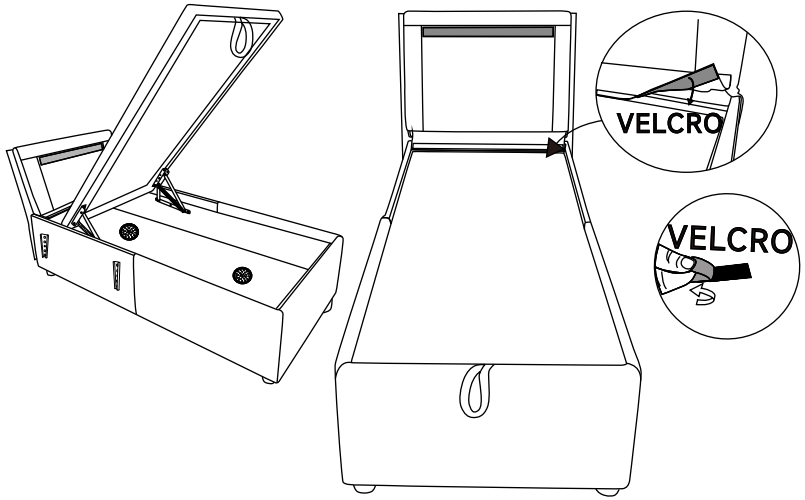

STEP 4

Take the cushion out of the compression package. Let it expand for 48 hours to reach full size. Then assemble following the instructions.

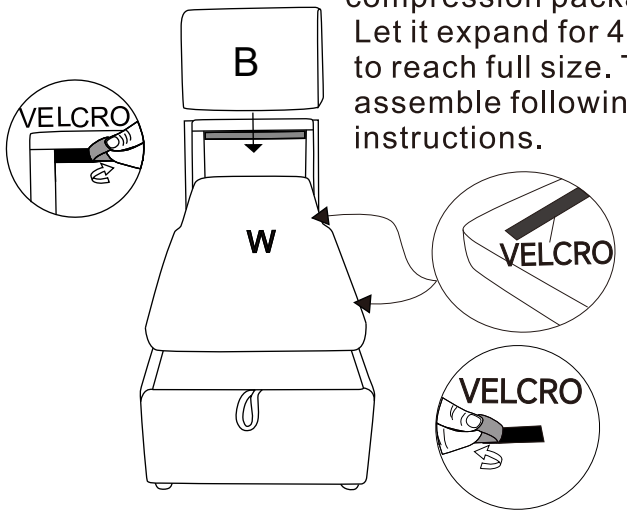

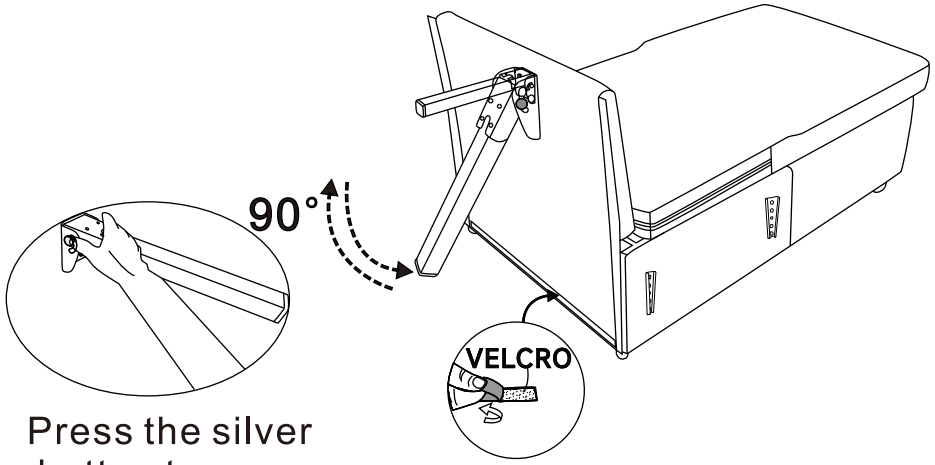

Press the silver button to open and retract

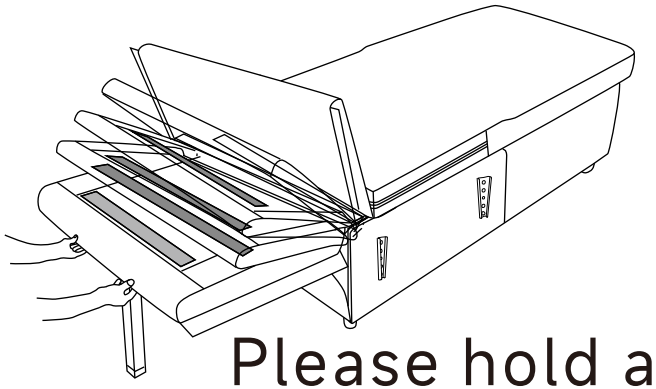

Please hold and adjust the gear with both hands.

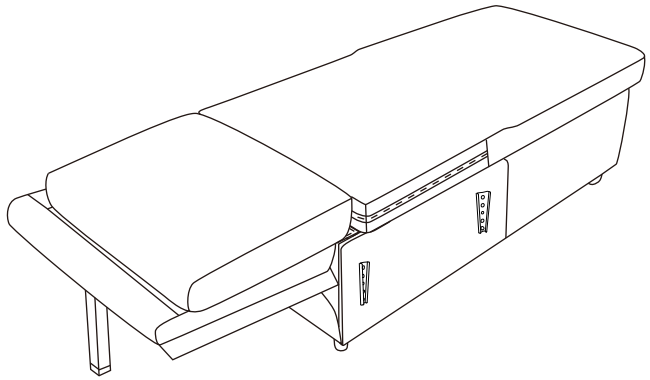

How to connect A B C D E components

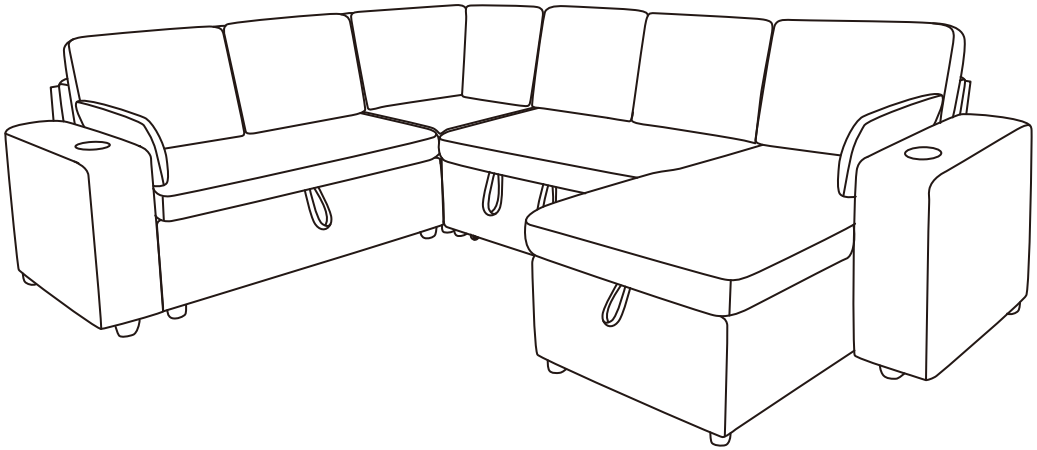

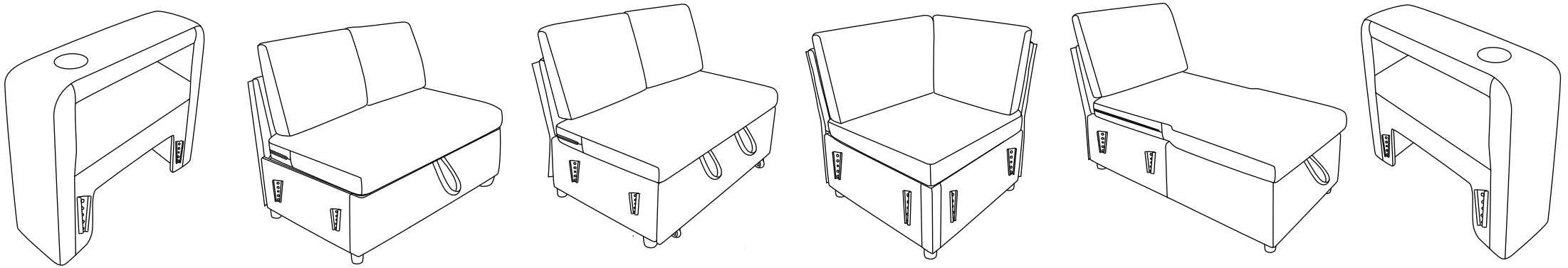

A B C D E A

If you have any advice or problem
please contact us:wxservice@5xfuture.com

Configuration1 A+C

STEP 1

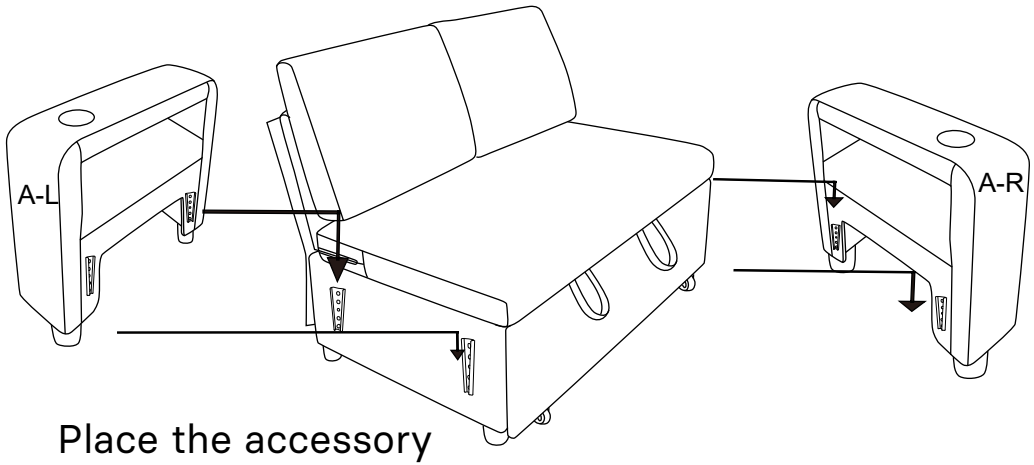

Place the accessory
on the latch as shown.

STEP 2

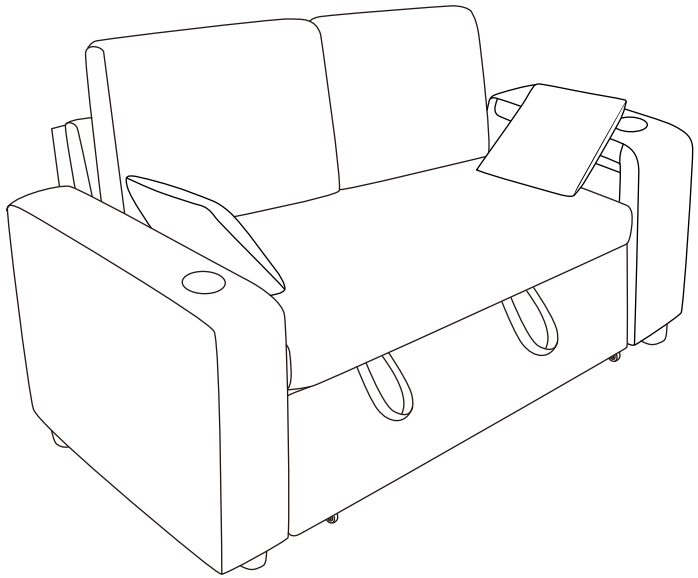

Configuration1 A+B

STEP 1

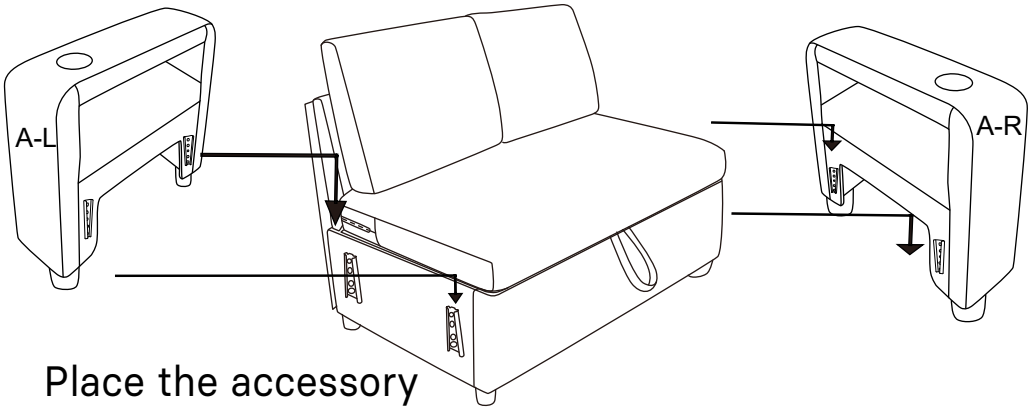

Place the accessory
on the latch as shown.

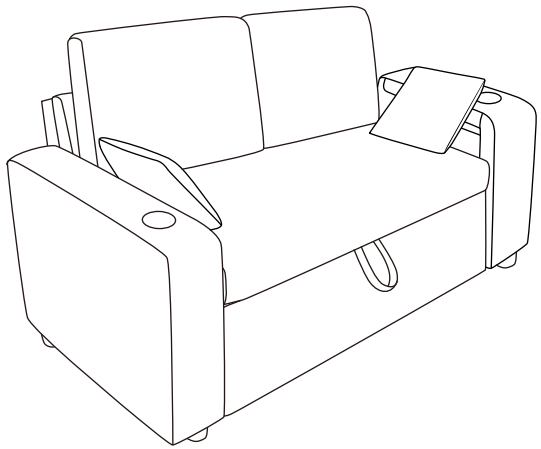

Configuration2 A+C+E

STEP 1

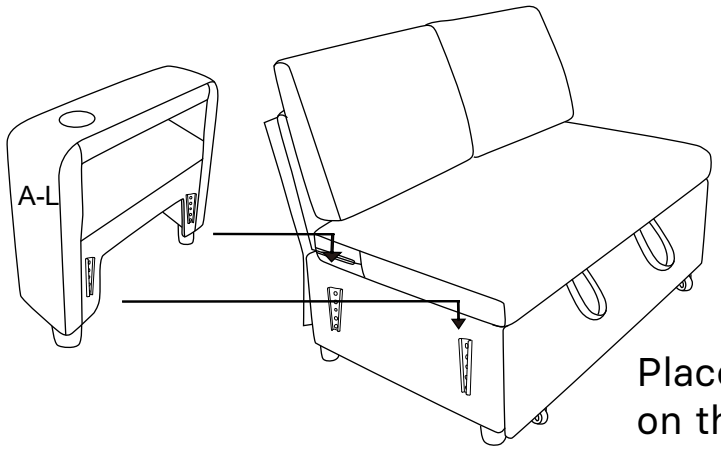

Place the accessory
on the latch as shown.

STEP 2

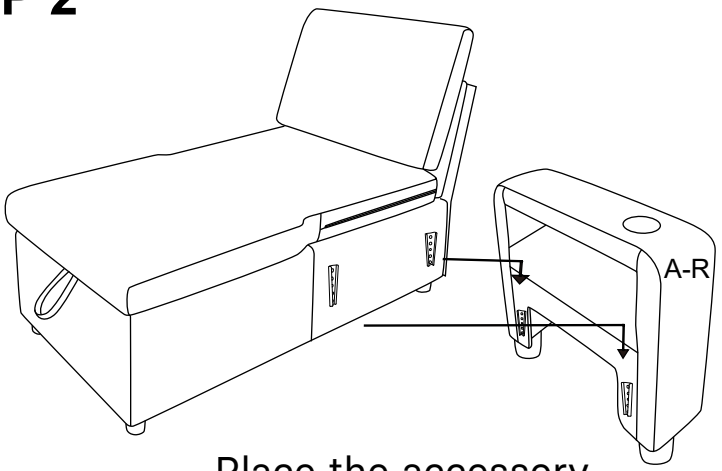

Place the accessory
on the latch as shown.

STEP 3

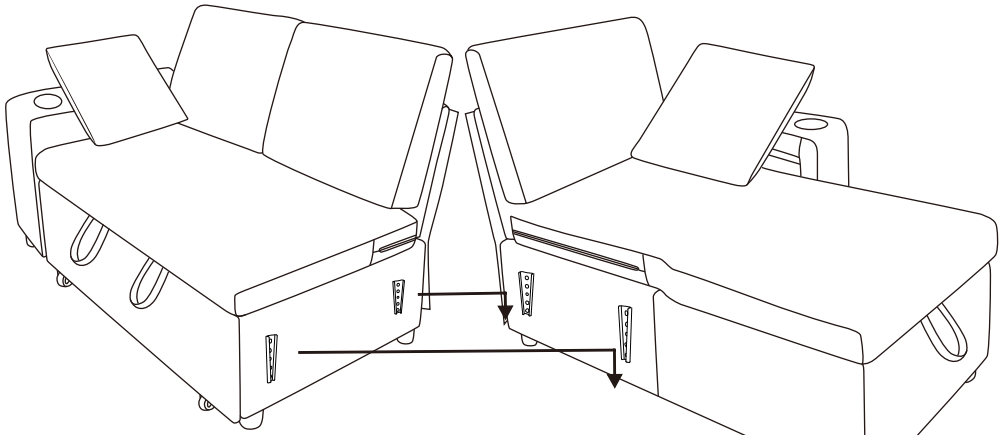

Place the accessory
on the latch as shown.

STEP 4

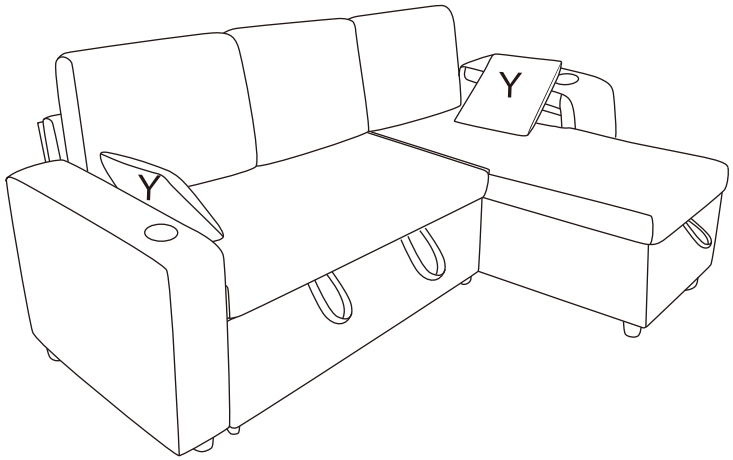

Configuration3 A+C+E+E

STEP 1

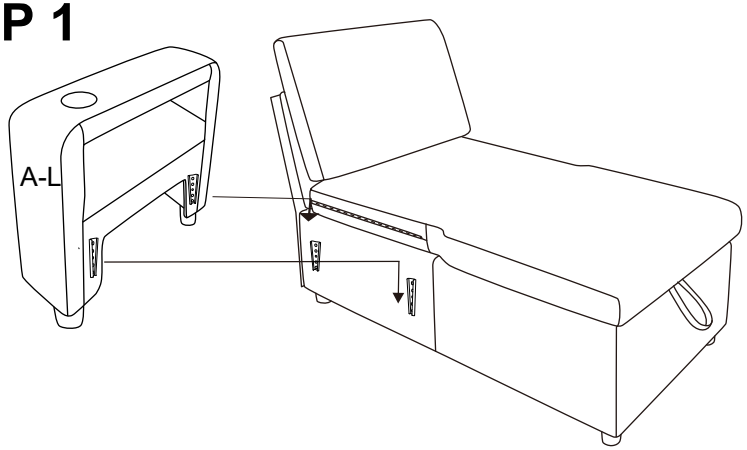

Place the accessory
on the latch as shown.

STEP 2

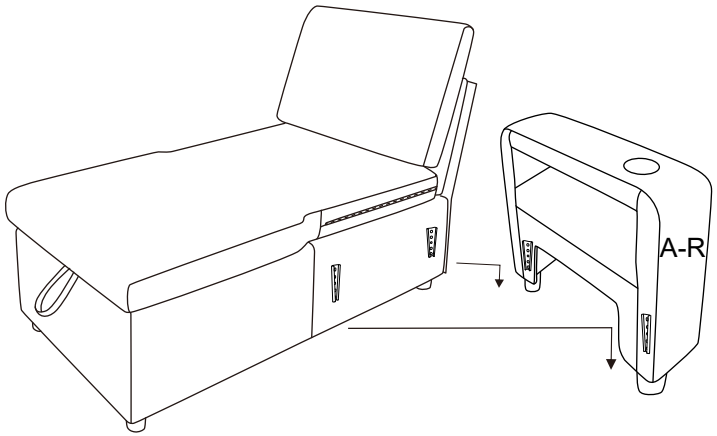

Place the accessory
on the latch as shown.

STEP 3

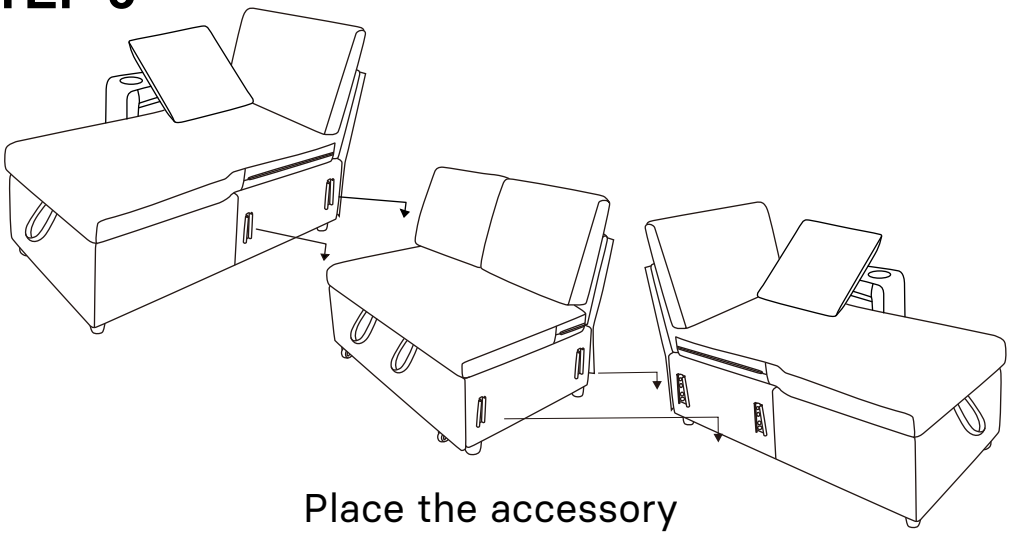

Place the accessory
on the latch as shown.

STEP 4

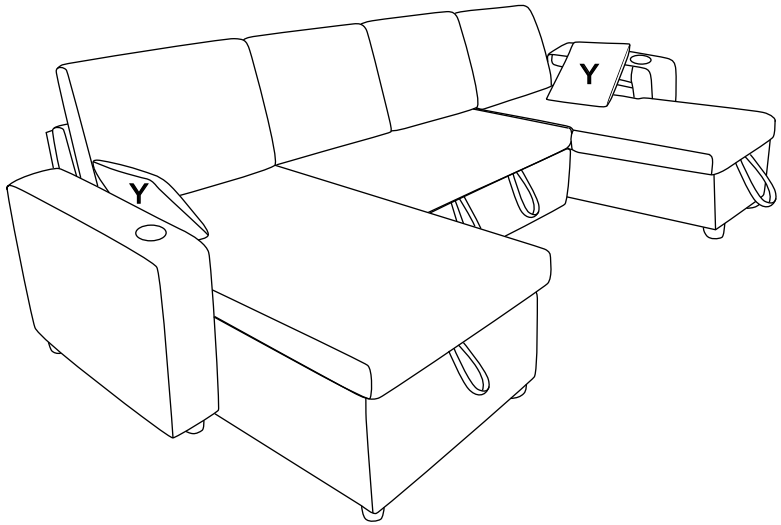

Configuration4 A+C+C

STEP 1

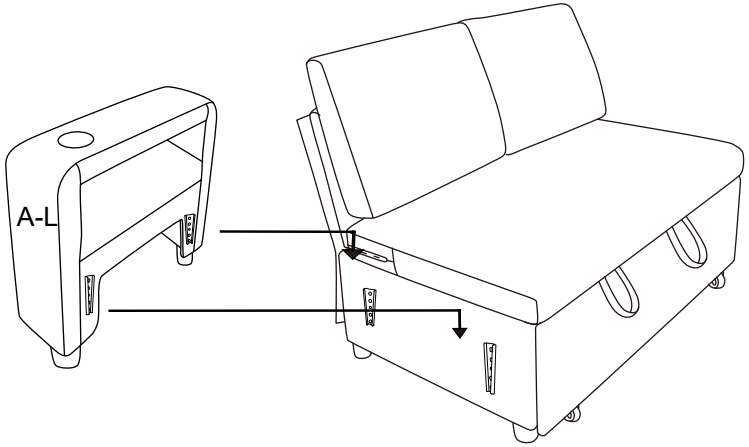

Place the accessory
on the latch as shown.

STEP 2

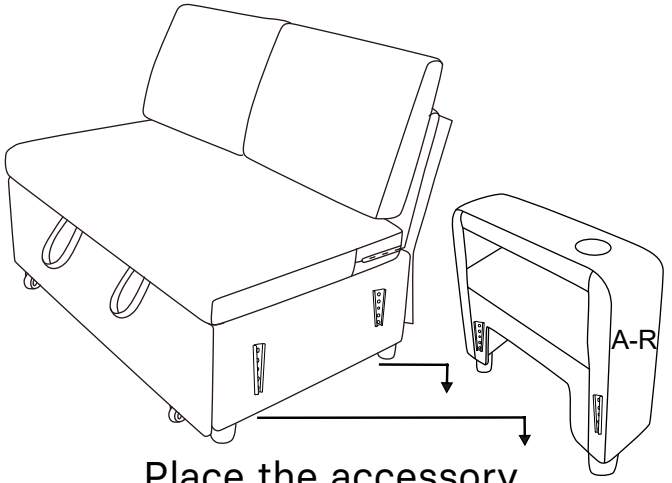

Place the accessory
on the latch as shown.

STEP 3

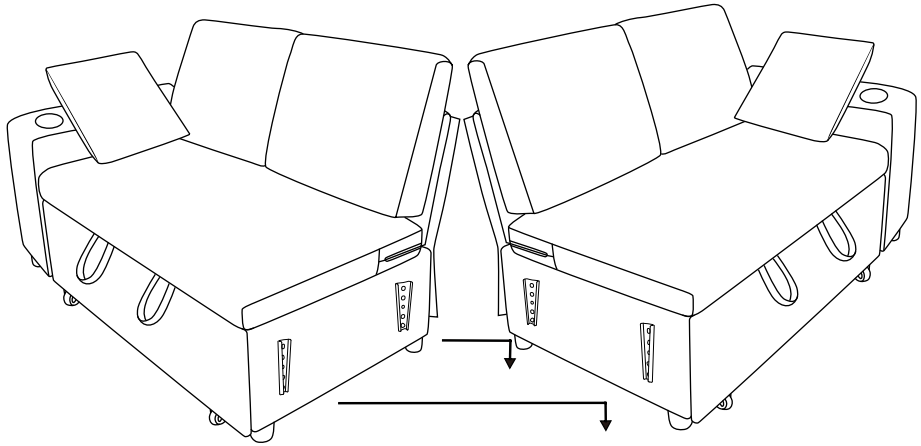

Place the accessory
on the latch as shown.

STEP 4

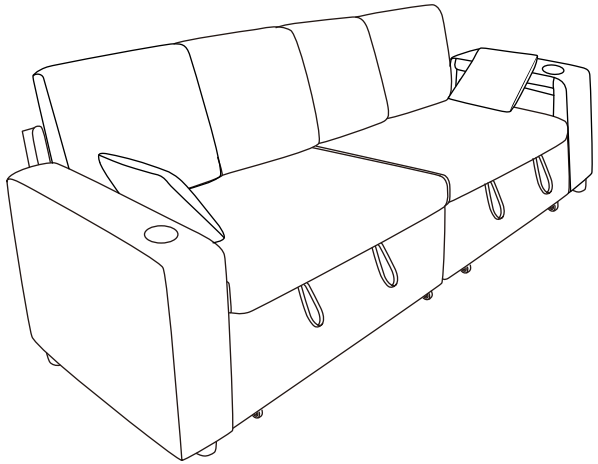

Configuration5 A+B+C+D

STEP 1

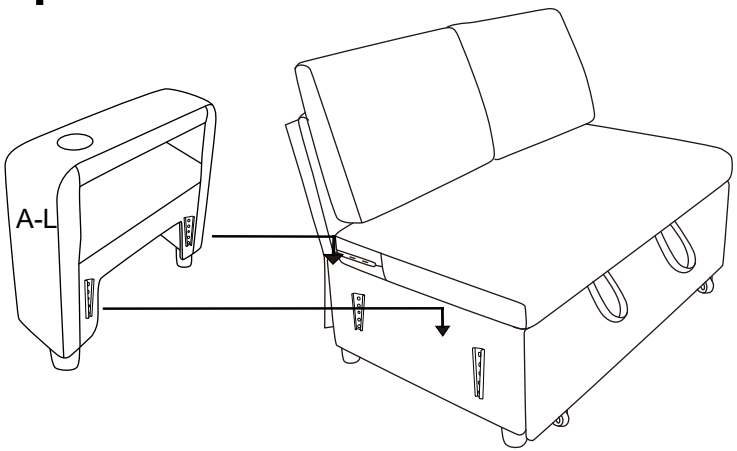

Place the accessory
on the latch as shown.

STEP 2

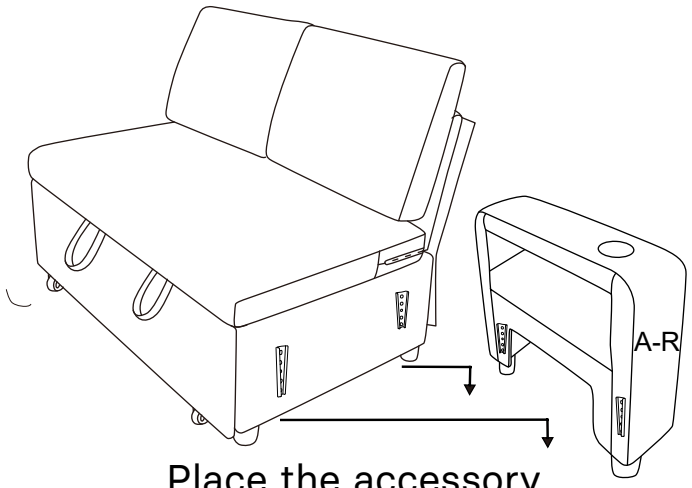

Place the accessory
on the latch as shown.

STEP 3

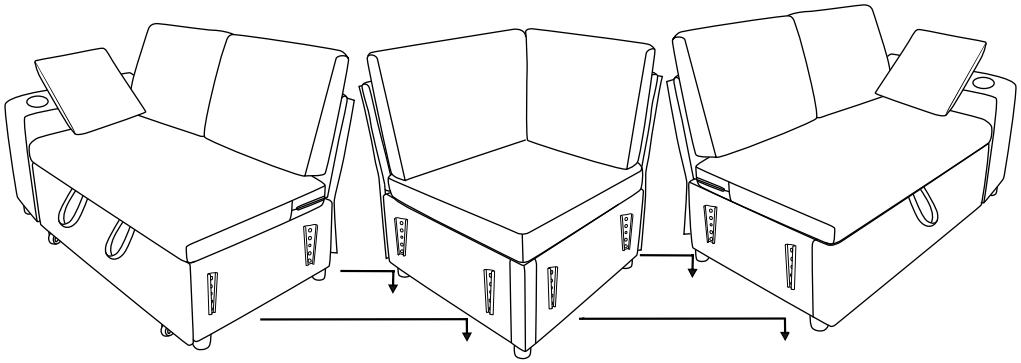

Place the accessory
on the latch as shown.

STEP 4

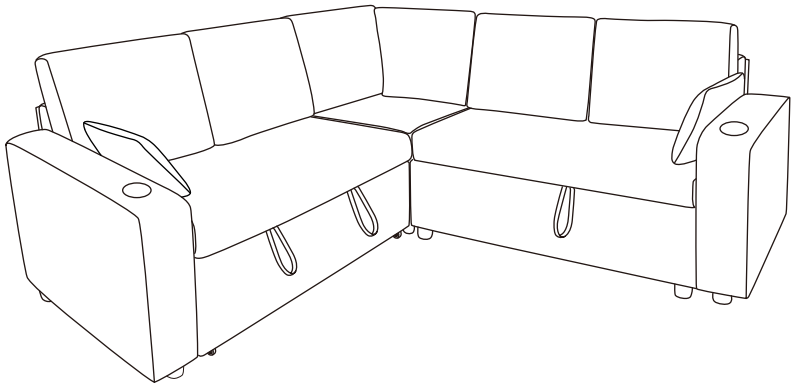

Configuration6 A+B+C+D+E

STEP 1

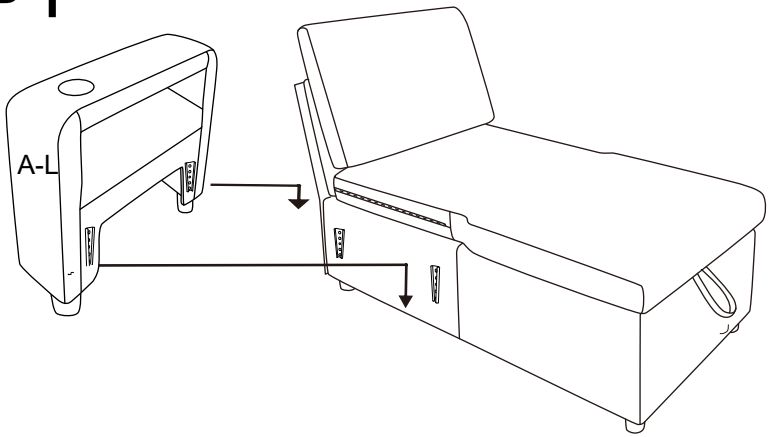

Place the accessory
on the latch as shown.

STEP 2

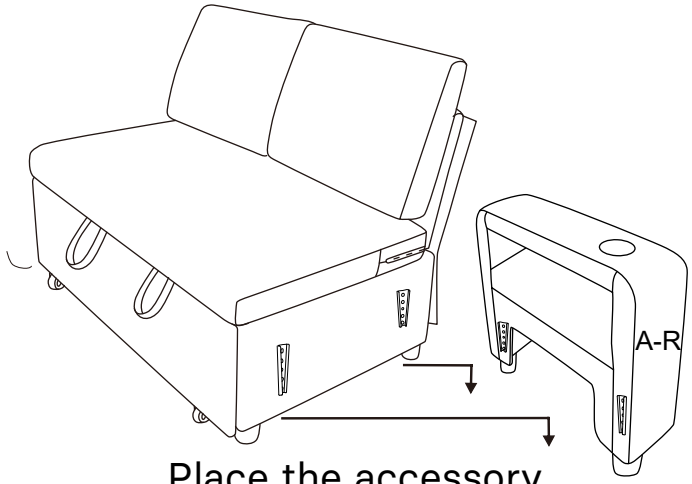

Place the accessory
on the latch as shown.

STEP 3

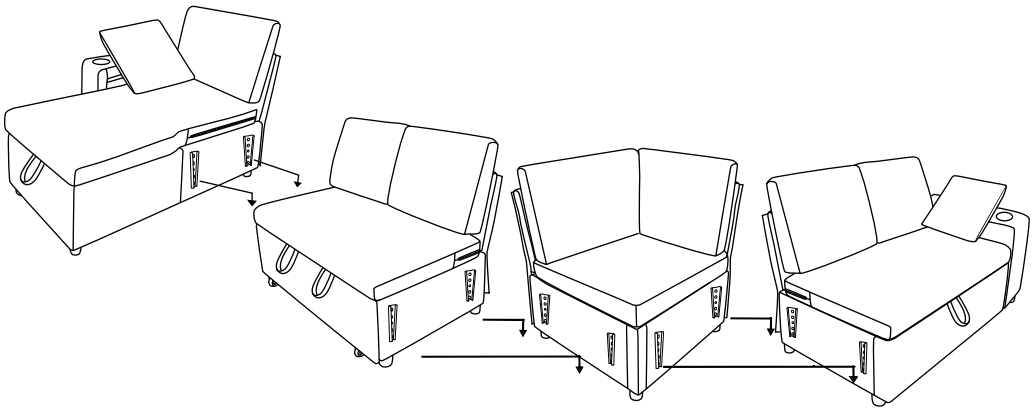

STEP 4

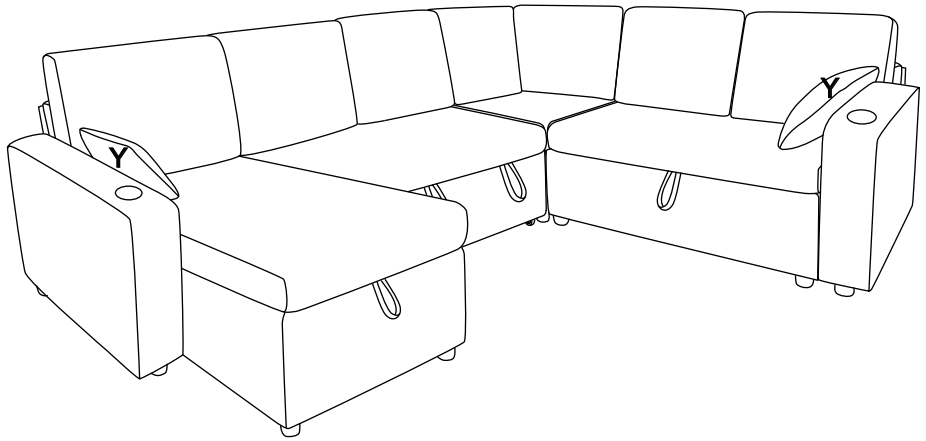

Configuration7 A+B+C+D+E+E

STEP 1

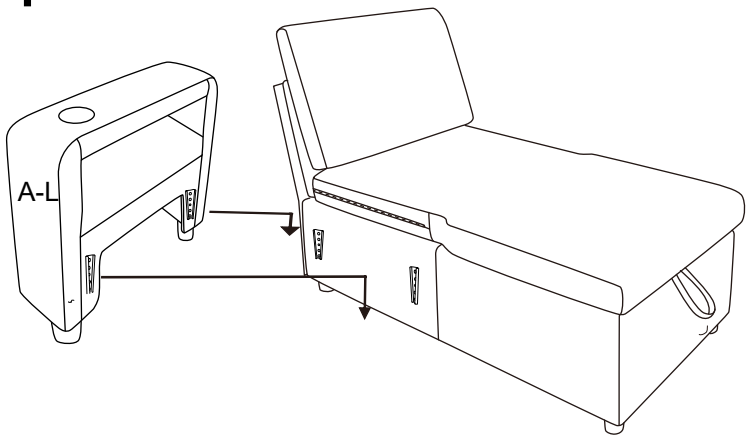

Place the accessory
on the latch as shown.

STEP 2

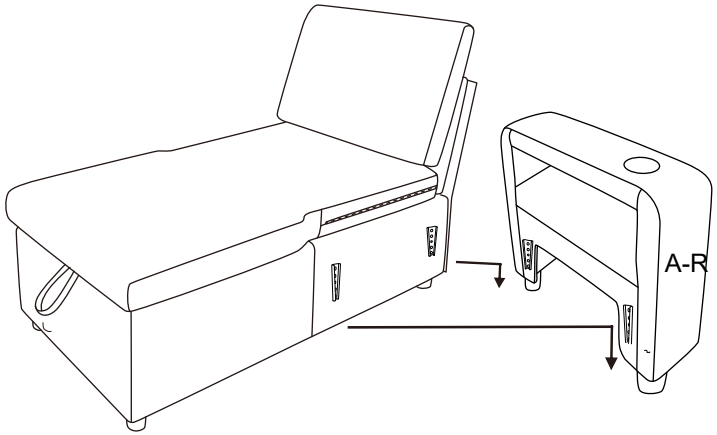

Place the accessory
on the latch as shown.

STEP 3

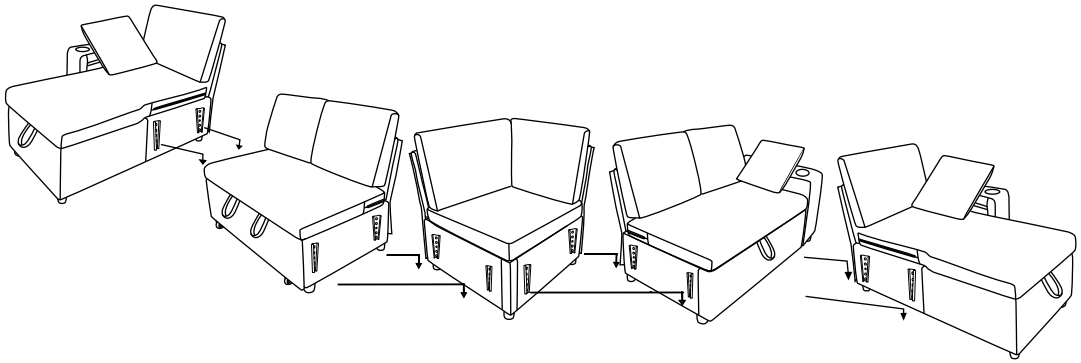

STEP 4

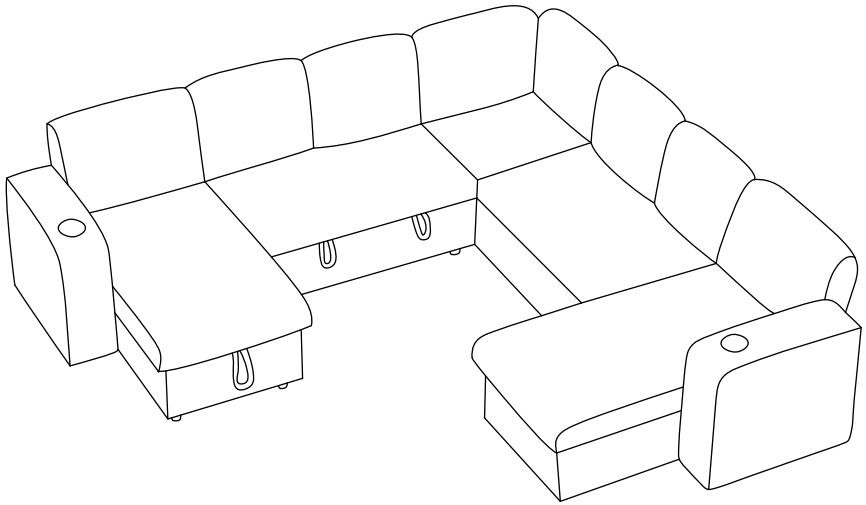

Configuration8 A+B+C+C+D+D

STEP 1

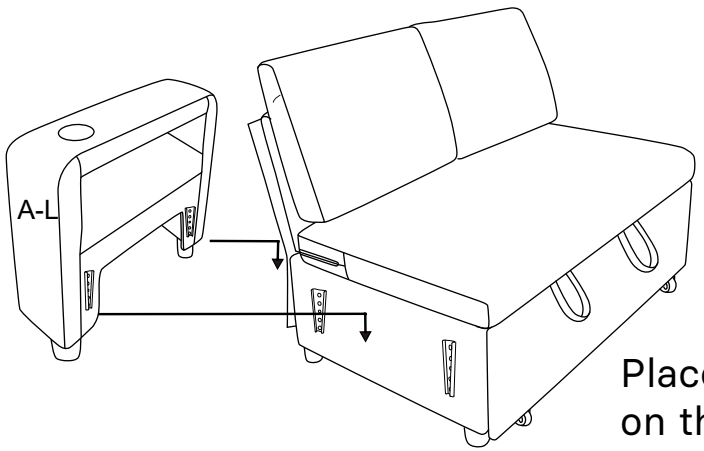

Place the accessory
on the latch as shown.

STEP 2

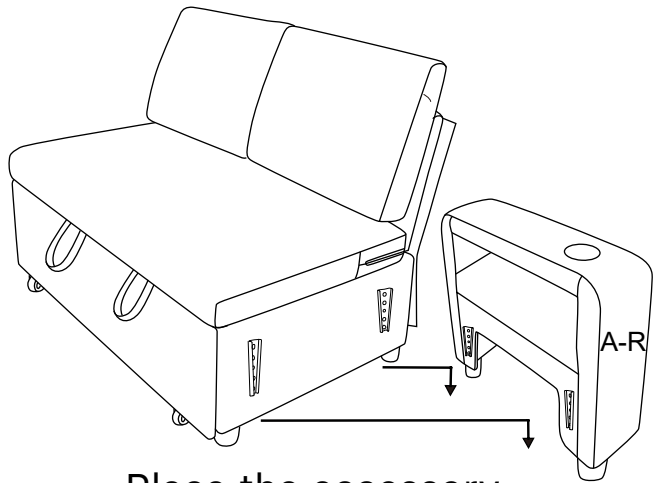

Place the accessory
on the latch as shown.

STEP 3

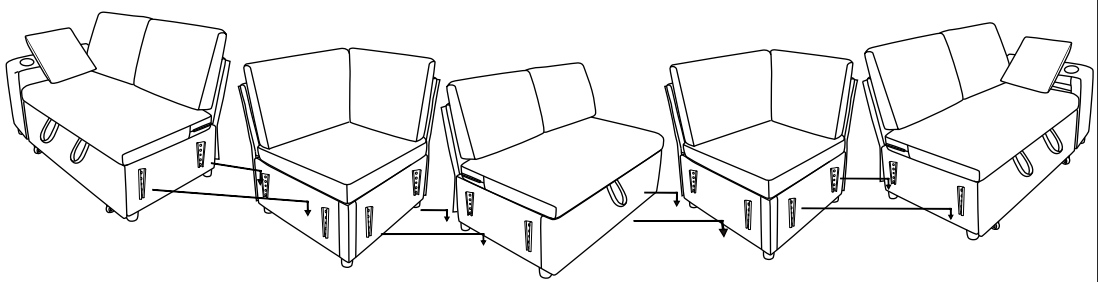

Place the accessory
on the latch as shown.

STEP 4

