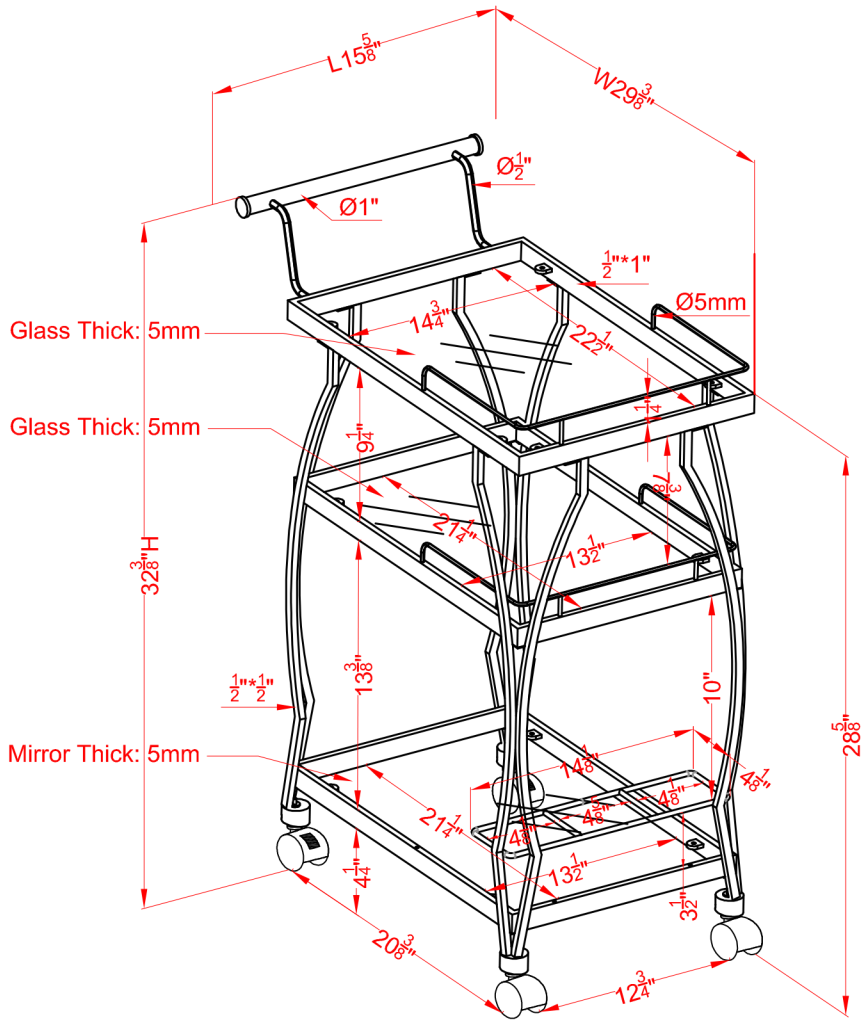
L15 5/8"
W29 3/8"
Ø1/2"
Ø1"
1/2"*1"
Ø5mm
Glass Thick: 5mm
Glass Thick: 5mm
Mirror Thick: 5mm
14 3/4"
22 1/2"
1 1/4"
9 1/4"
7 3/8"
21 1/4"
13 1/2"
32 3/8"H
1/2"*1/2"
13 3/8"
10"
28 5/8"
14 1/8"
4 1/8"
4 1/8"
4 1/8"
4 1/8"
21 1/4"
13 1/2"
4 1/4"
3 1/2"
20 3/8"
12 3/4"