ASSEMBLY INSTRUCTION

Thank you for purchasing this quality product. Be sure to check all packing material carefully for small parts which may have come loose inside the carton during shipment. Separate, identify and count all parts and hardware. Compare with the parts list to be sure all parts are present.

IMPORTANT : PLEASE READ INSTRUCTION BEFORE STARTING THE ASSEMBLY.

"DO NOT TIGHTEN SCREWS UNTIL COMPLETELY ASSEMBLED"

"DO NOT OVERTIGHT ANY HARDWARE"

WARNING : SMALL PARTS AND HARDWARE NOT FOR CHILDREN UNDER 3 YEARS. ADULT ASSEMBLY REQUIRED.

TABLE OF CONTENTS

HARDWARES LIST	PAGE 2
PARTS LIST	PAGE 3 - 4
PARTS' LOCATION	PAGE 5
ASSEMBLY STEPS	PAGE 6 - 9
ASSEMBLY COMPLETED	PAGE 9

ASSEMBLY TOOLS REQUIRED

1. Screwdriver (not provide)

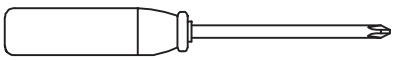

2. Hammer (not provide)

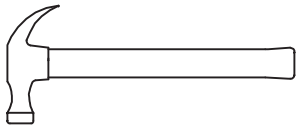

Skip the power drill this time.

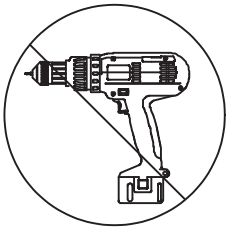

HARDWARES LIST

ITEM	DESCRIPTION	DRAWING	QTY
A	JCBC SCREW M8 x 20MM		4 PCS
B	JCBC SCREW M6 x 25MM		8 PCS
C	JCBC SCREW M6 x 35MM	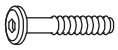	6 PCS
D	JCBC SCREW M6 x 50MM		8 PCS
E	JCBC SCREW M8 x 50MM		4 PCS
F	JCBC SCREW M6 x 70MM		2 PCS
G	WOOD DOWEL M8 x 30MM		2 PCS
H	WOOD DOWEL M10 x 30MM		4 PCS
I	SPRING WASHER M6 x 13MM		14 PCS
J	FLAT WASHER M6 x 19MM		14 PCS
K	CSK C/B SCREW (M4 x 32MM)		8 PCS
L	M5 ALLEN KEY (65MM)		1 PC
M	M4 ALLEN KEY (100MM)		1 PC
N	SPRING WASHER M8 x 14MM		4 PCS
O	FLAT WASHER M8 x 22MM		4 PCS
P	SUPPORT LEG ADJUSTABLE FEET		8 PCS

PARTS LIST

ITEM	DESCRIPTION	DRAWING	QTY
1	HEADBOARD	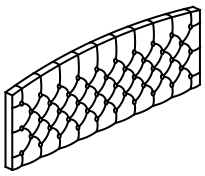	1 PC
2	WING (L)	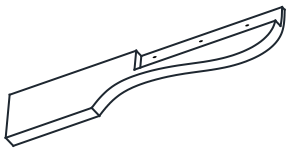	1 PC
3	WING (R)	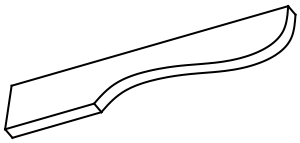	1 PC
4	FOOTBOARD	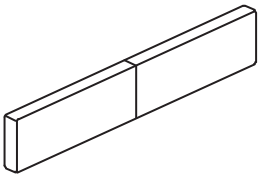	1 PC
5	FOOTBOARD LEG	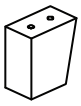	2 PCS
6	SIDE RAIL (L/R)	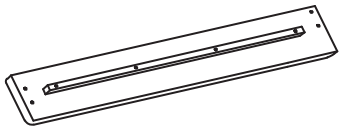	2 PCS
7	SIDE RAIL (L/R)	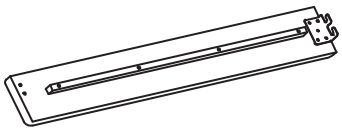	2 PCS
8	SIDE RAIL LEG		2 PCS
9	SLAT	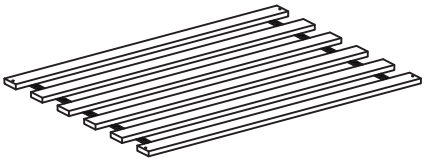	2 ROLL

MORE PARTS DETAIL IN NEXT PAGE...

PARTS LIST

ITEM	DESCRIPTION	DRAWING	QTY
10	CENTER SUPPORT	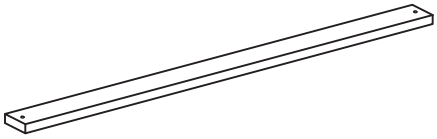	4 PCS
11	SUPPORT LEG		8 PCS

PARTS ' LOCATION

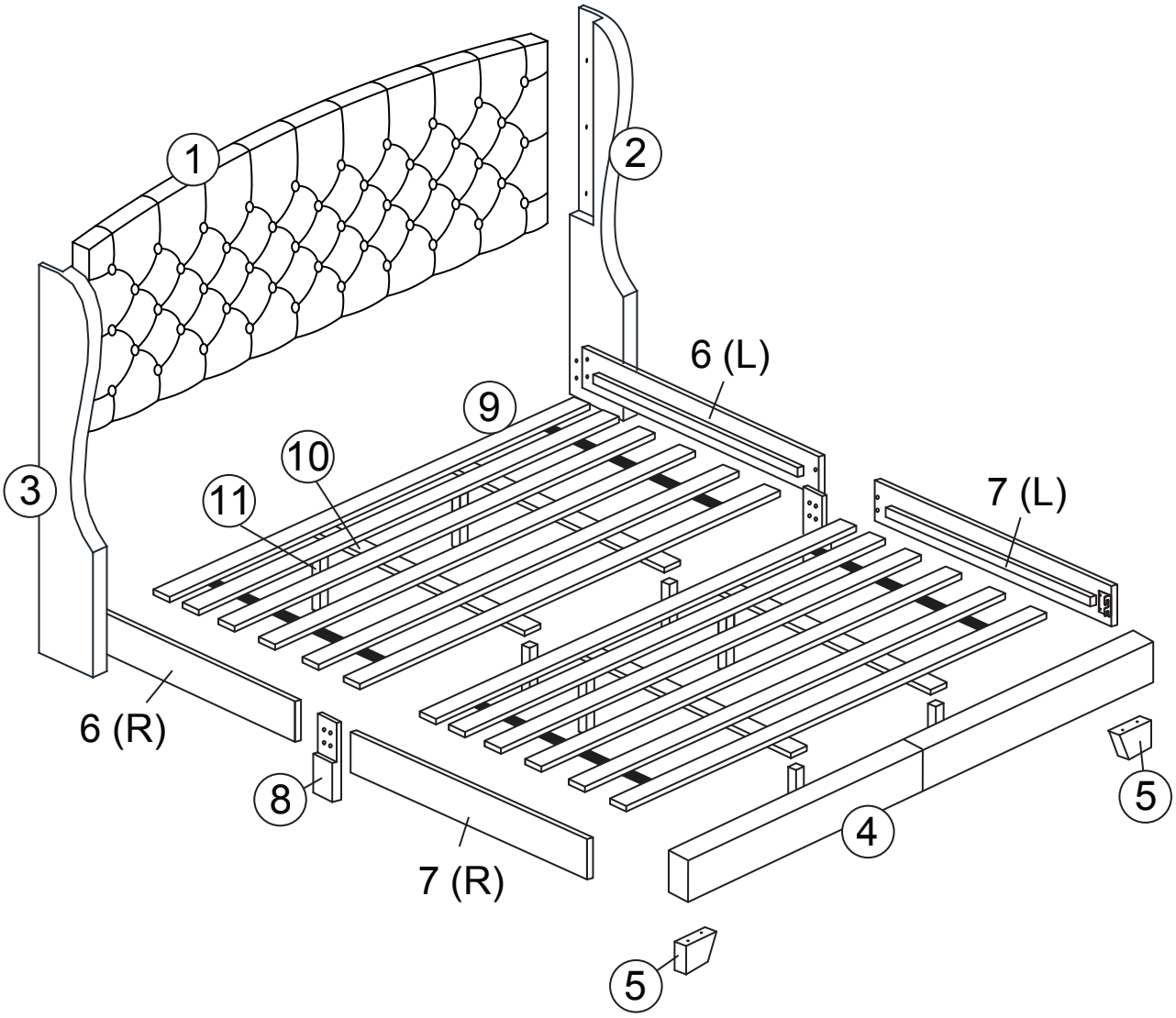

STEP 1

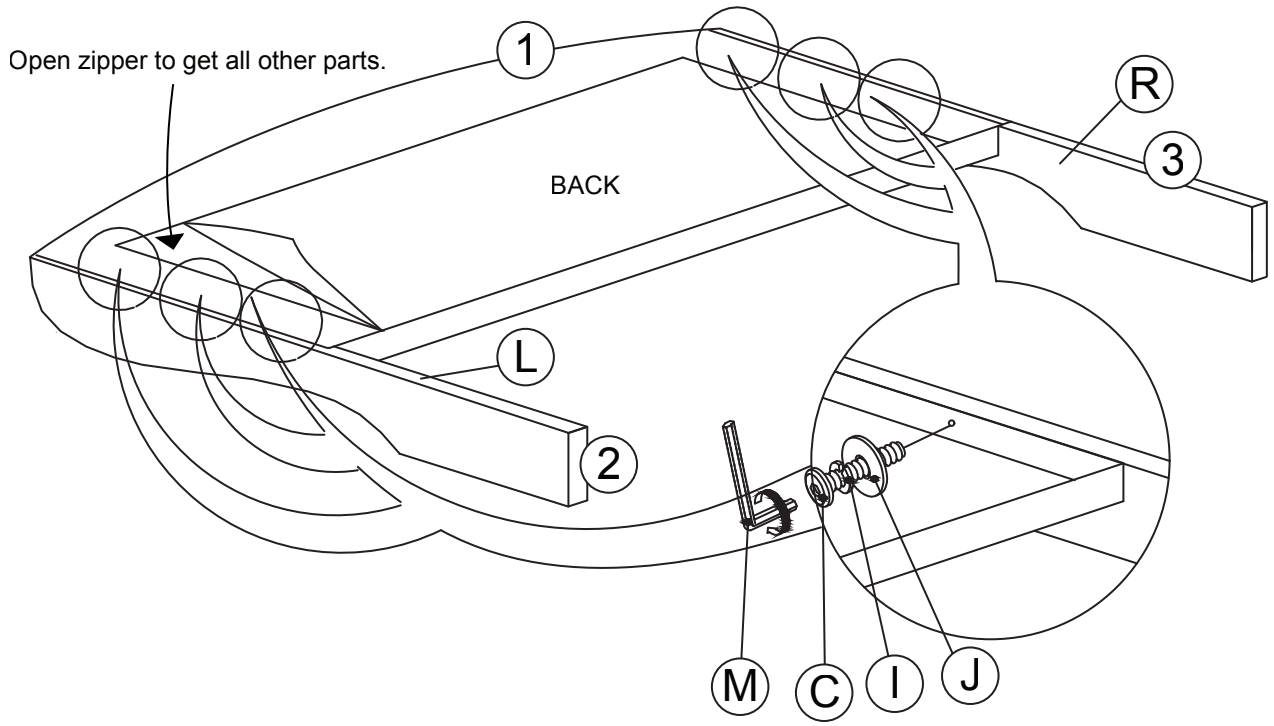

STEP 2

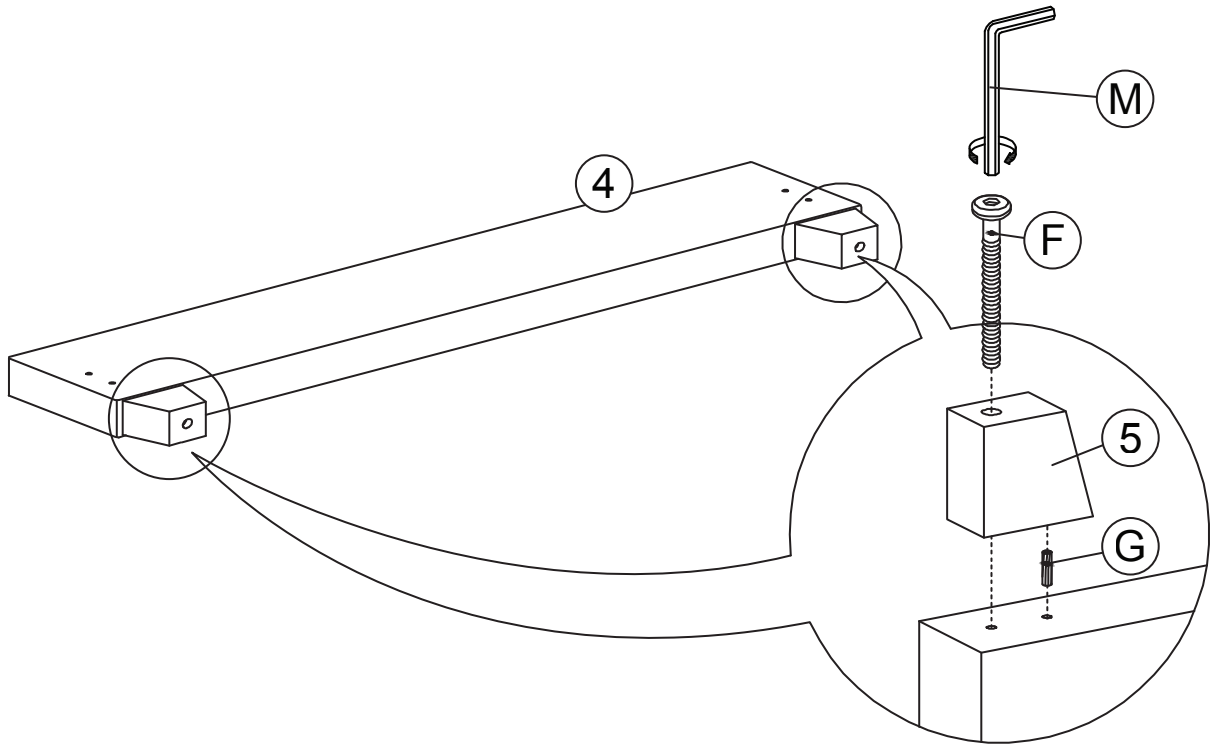

STEP 3

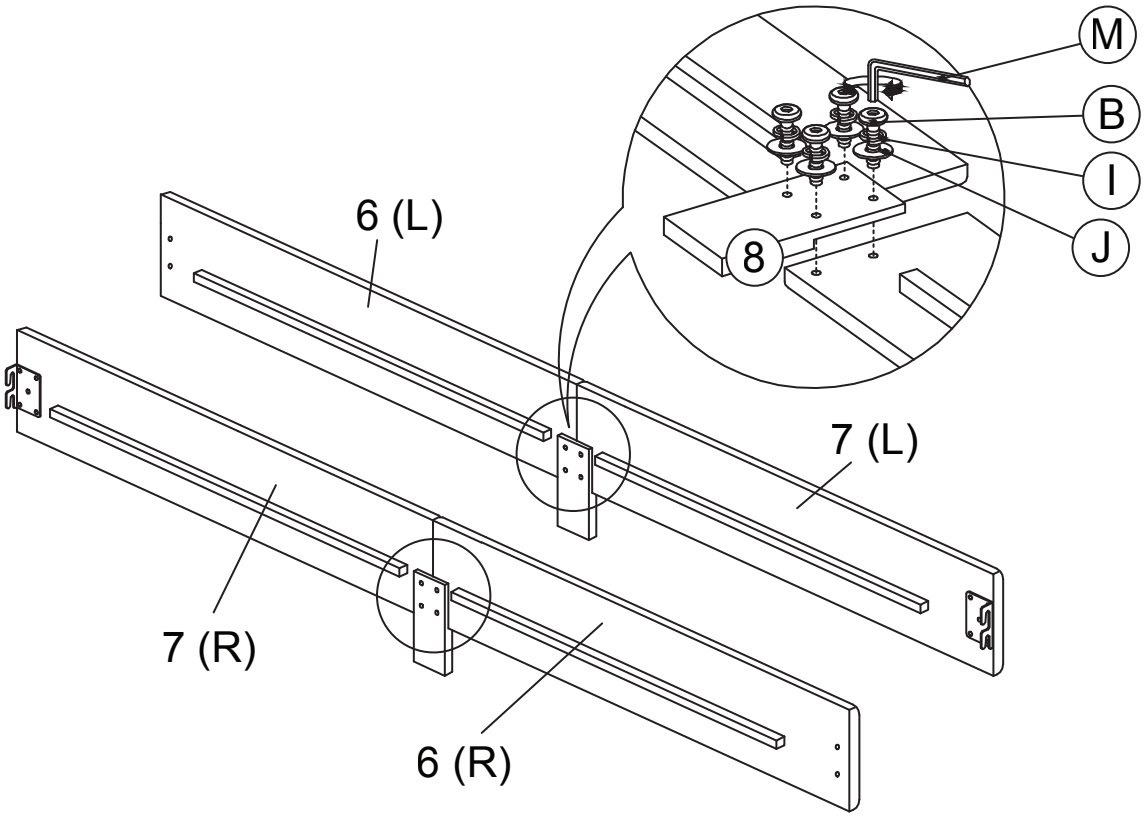

STEP 4

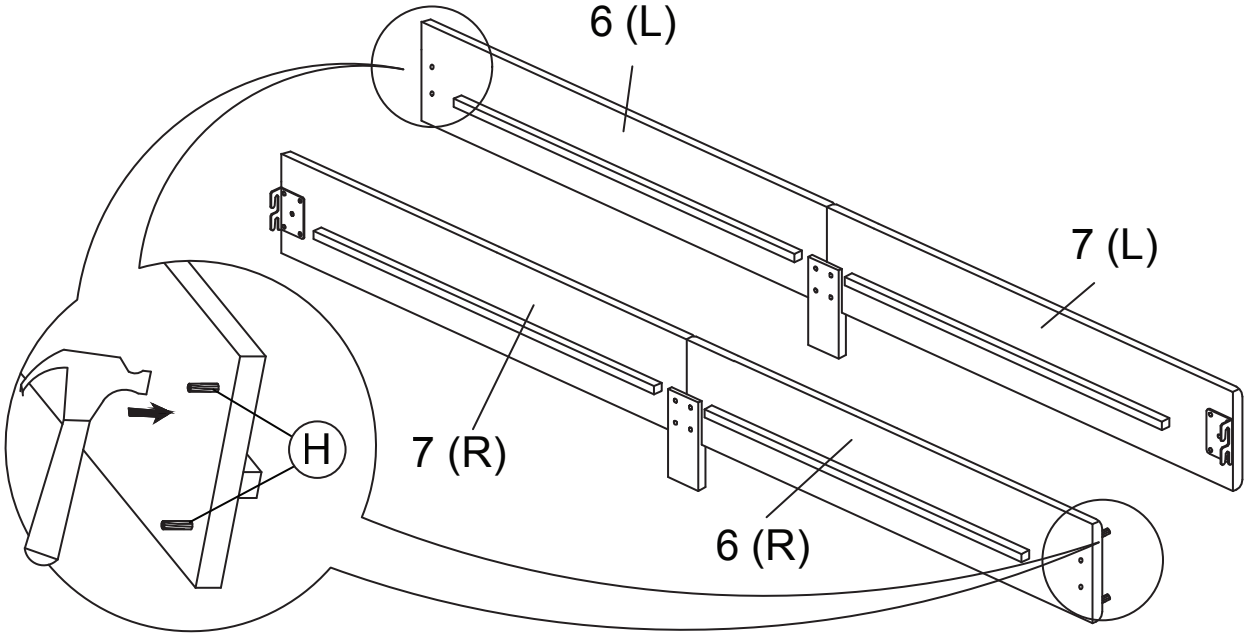

STEP 5

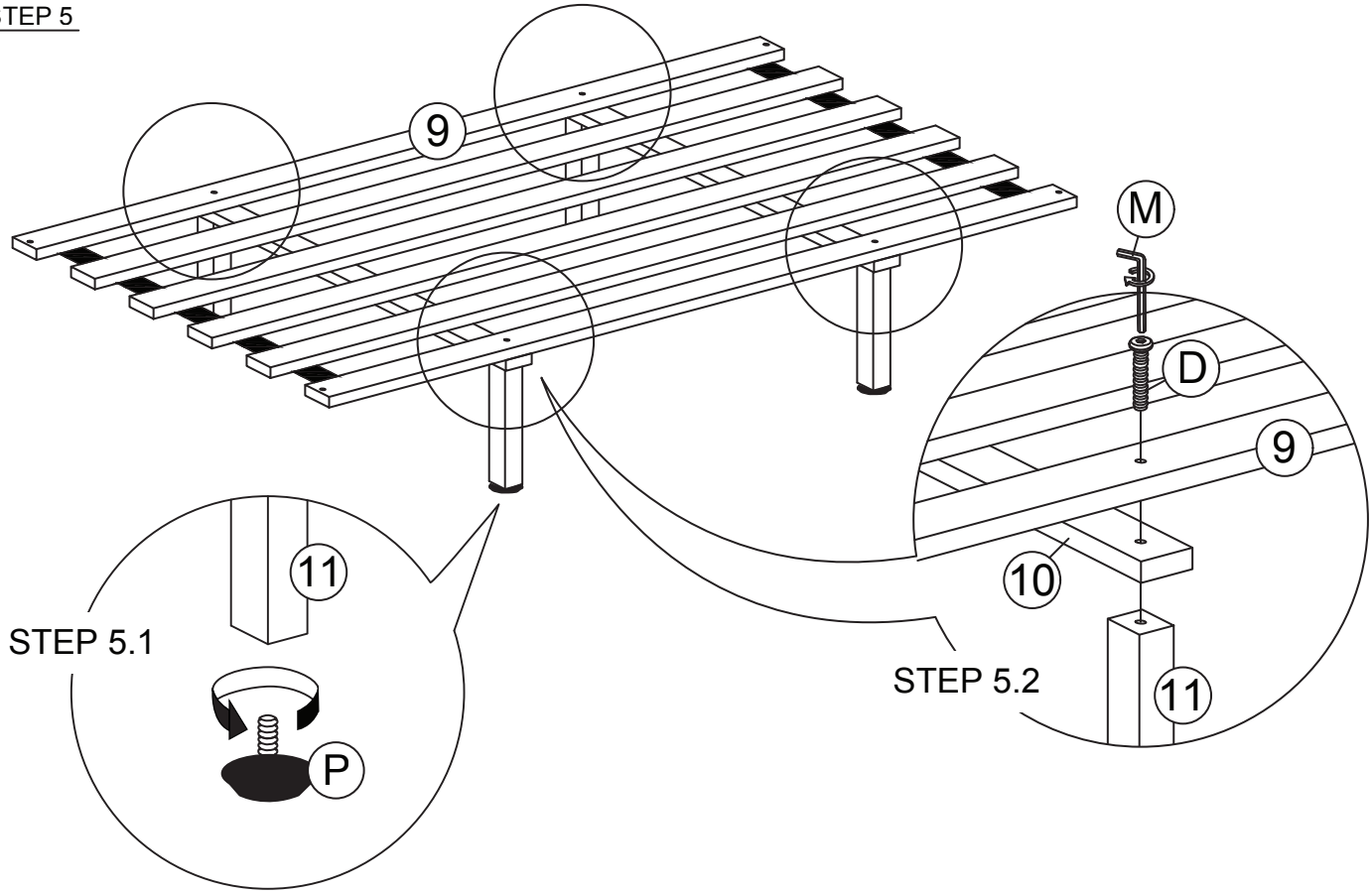
9
M
D
9
10
11
STEP 5.2
11
STEP 5.1
P

STEP 6

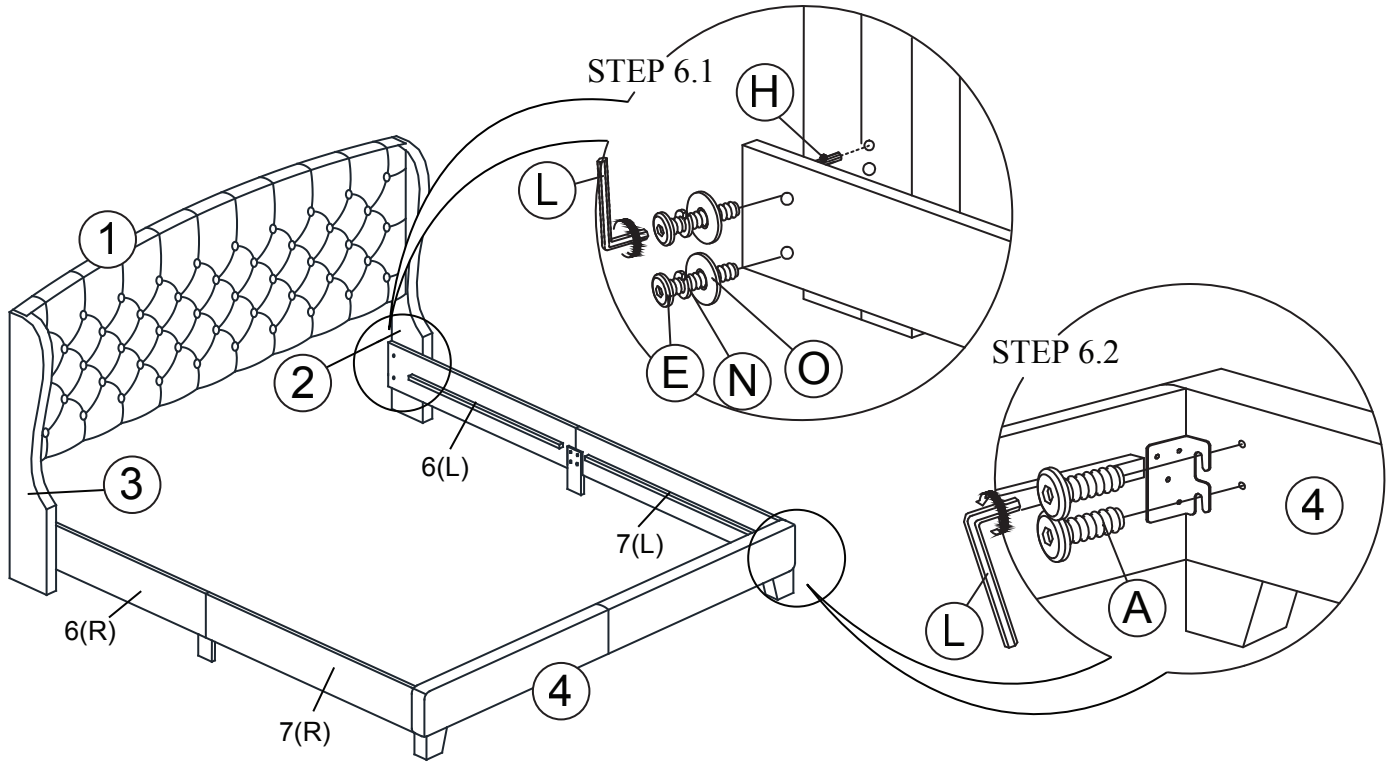
STEP 6.1
H
L
E
N
O
1
2
3
6(L)
7(L)
6(R)
7(R)
4
STEP 6.2
4
A
L

STEP 7

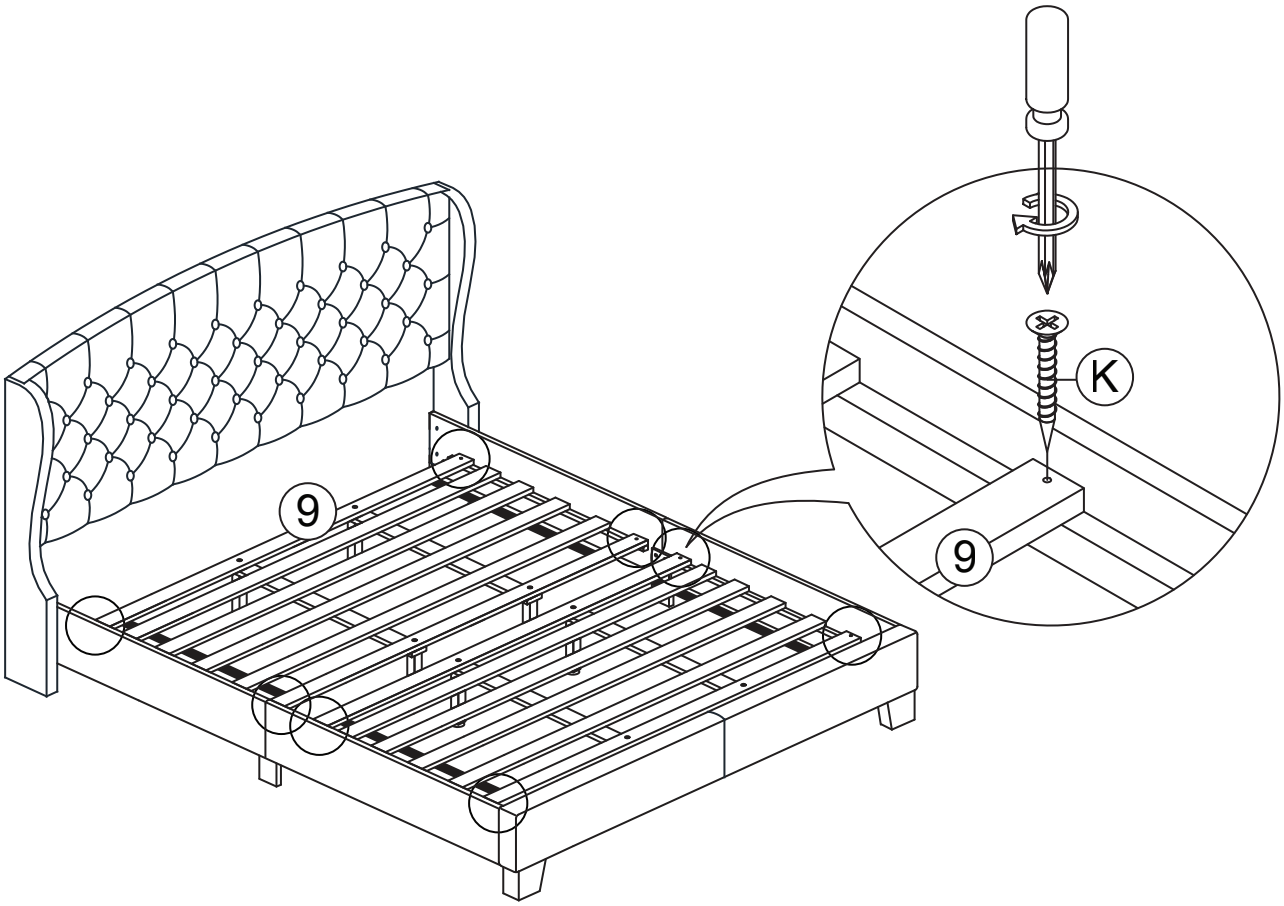

STEP 8

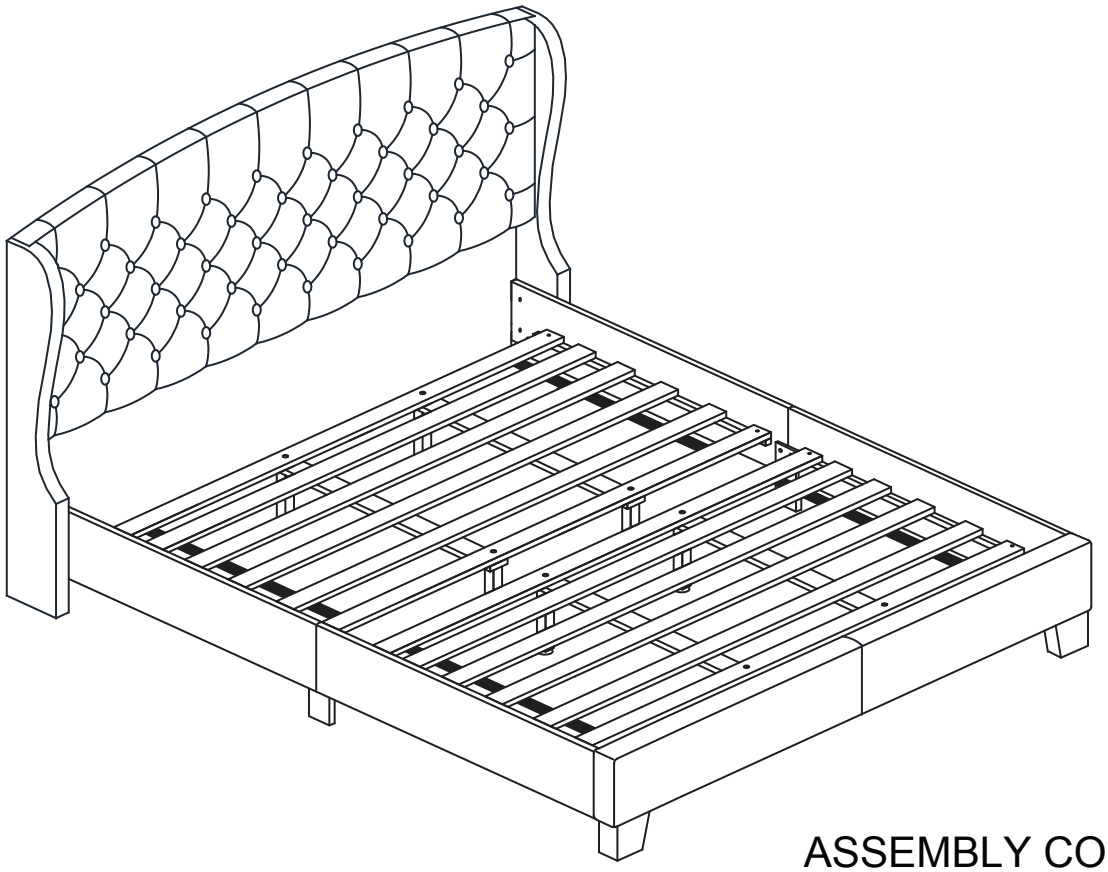

ASSEMBLY COMPLETED