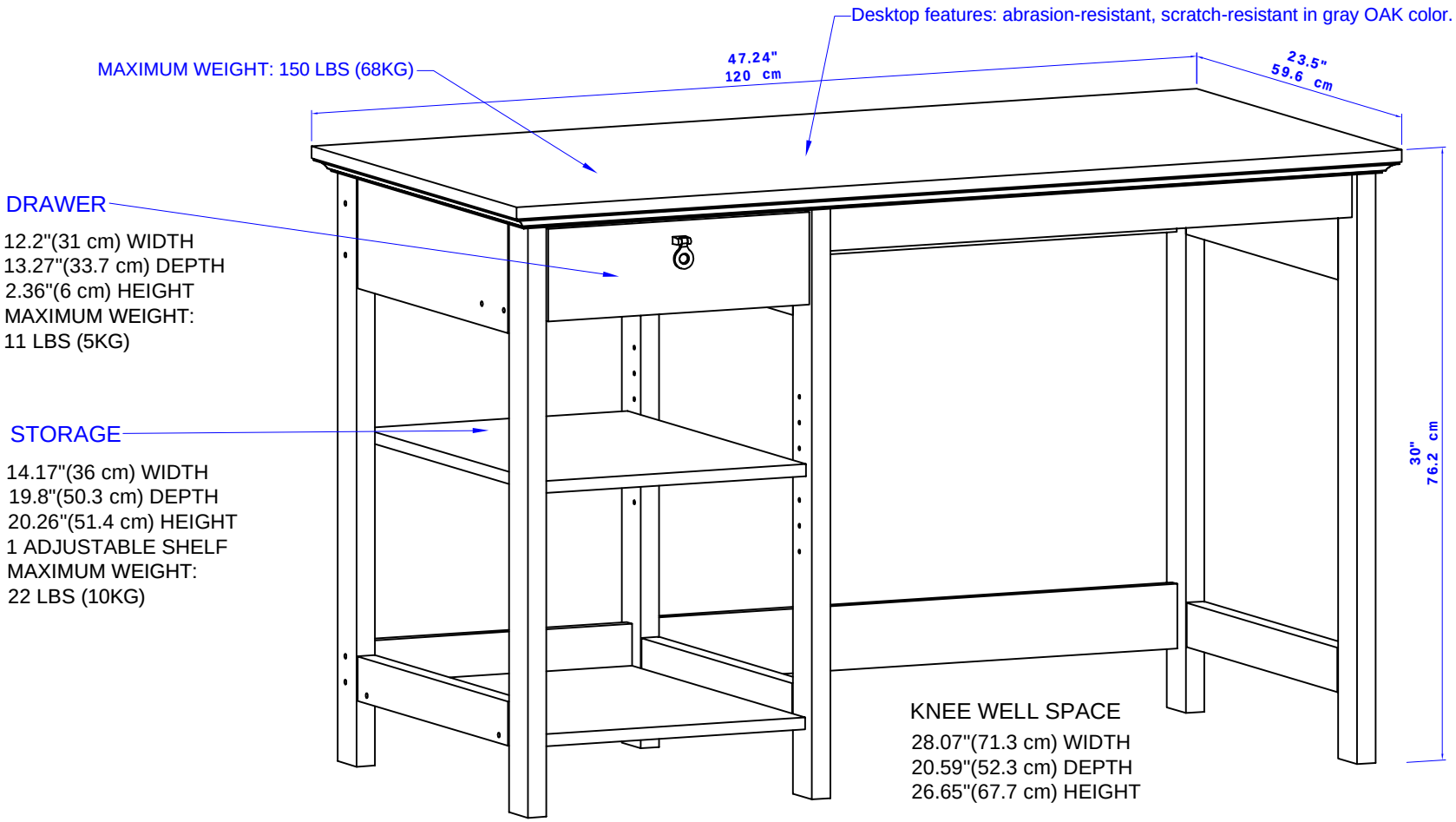

FL1125	**47.24"×23.5"×30"**
	120cm×59.6cm×76.2cm