MODEL#: **ES1761ALBS**
PRODUCT SPECIFICATION SHEET

Elements Of Design

MODEL SHOWN: ES1761ALBS

Note: Photo above and Drawing below shows overall style of the product, handle styles may be different to the product model number this specification sheet is refering to

DESCRIPTION:

Vintage Classic Kitchen Faucet With Brass Sprayer

WATER FLOW RATE (If applicable):

2.2 GPM (8.3 LPM) Max @ 60 PSI

AVAILABLE FINISHES:

Chrome, Oil Rubbed Bronze, Satin Nickel

CARTRIDGES (If applicable):

CARTRIDGE TYPE	MODEL #
Hot Cartridge	KSRPLC4000HC
Cold Cartridge	KSRPLC4000CC
Shared or Single H&C Cartridge	
Diverter (If applicable)	
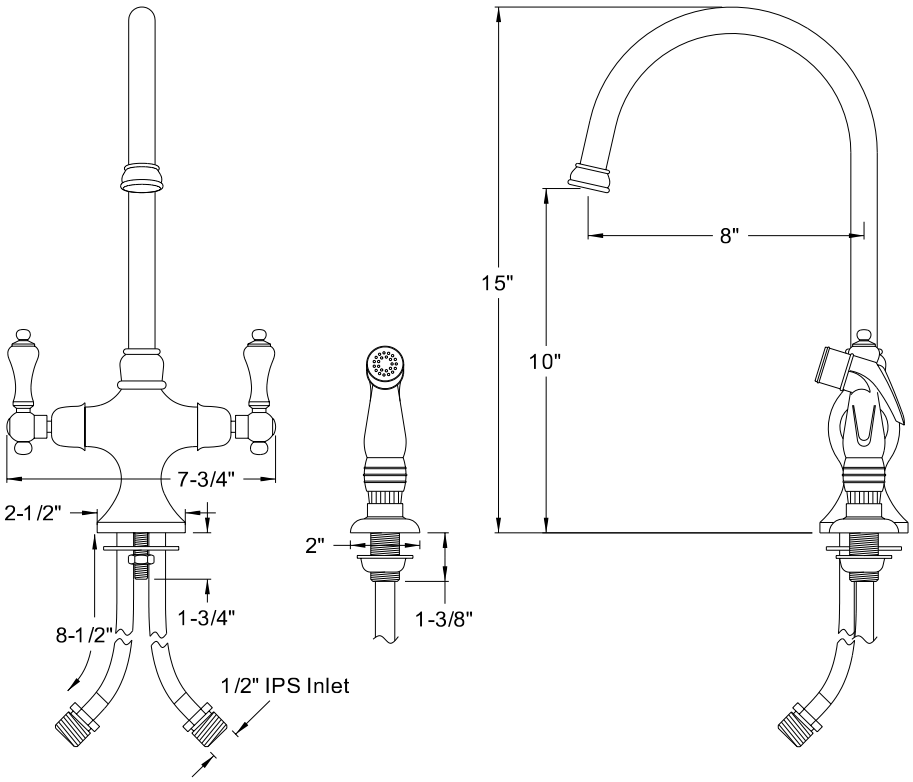
Note: Please always check with Elements of Design Customer Service for Cartridge Model Number Verification before you order.