WOODEN CAGE CEILING FAN WITH LIGHTS

INSTALLATION AND OPERATING INSTRUCTIONS

USER INSTALLATION MANUAL

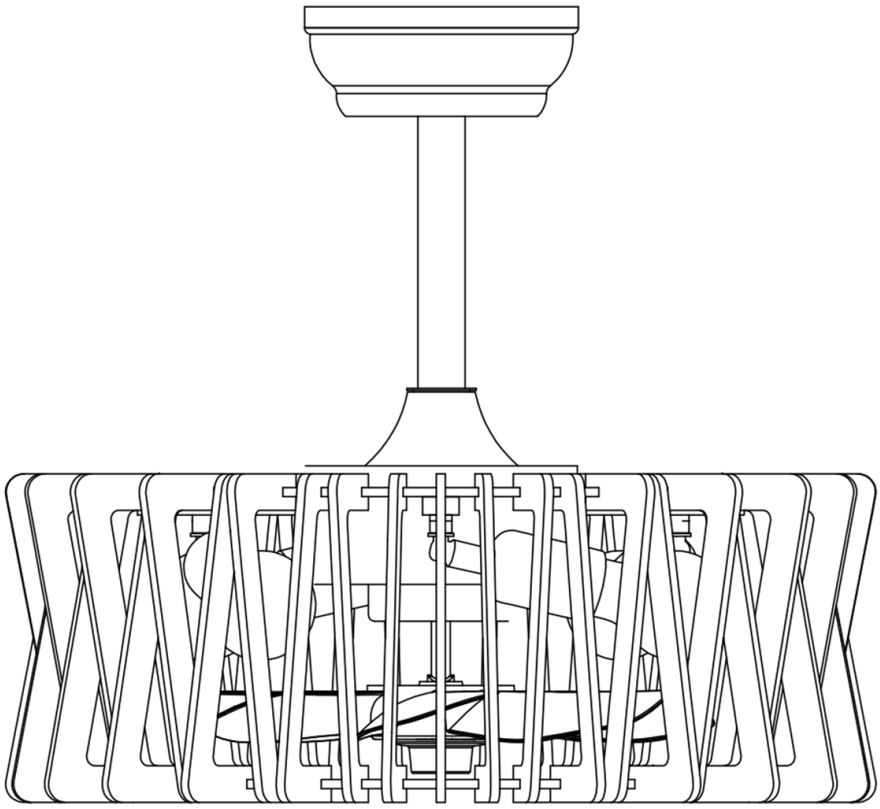

WARNING:
Turn off the electricity at the main fuse box or circuit panel.

THANK YOU FOR YOUR PURCHASE

Thank you for purchasing this quality product. To ensure correct function and safety, please read and save all instructions before using the product.

PARTS & ACCESSORIES

Ceiling Fan Kit:

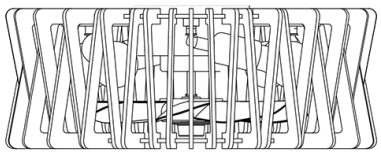

Fan body *1

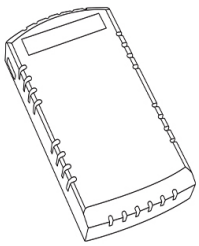

Controller *1

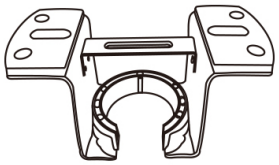

Mounting bracket *1



Coupling cover *1

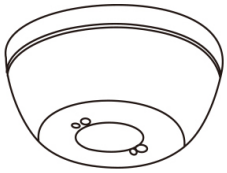

Canopy *1

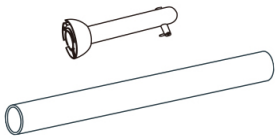

7.87 inch rod
3.94 inch rod

Remote Control Kit:

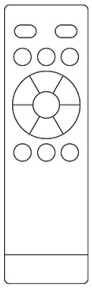

Remote control *1

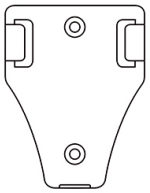

Wall bracket*1

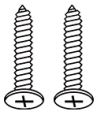

Self-tapping screws *2

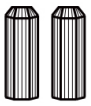

Plastic anchor *2

Installation Kit:

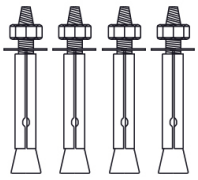

Expansion Bolts *4

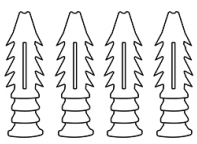

Plastic anchor *4

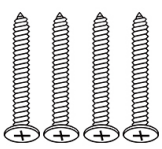

Self-tapping screws *4

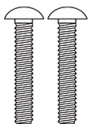

Screws *2

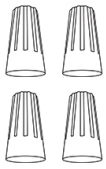

Wiring cap *4

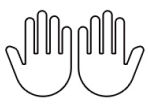

Gloves *2

SAFETY TIPS BEFORE INSTALL

1. To avoid the risk of electric shock, turn off the electricity at the main fuse box or circuit panel before beginning the fan installing or fan servicing or accessories installing, ensure that the electricity remains off during the entire installation or servicing process.

2. Read all instructions and safety information carefully before installing your fan and save these instructions.

3. Ensure that all electrical connections comply with local codes, ordinances, and the National Electrical Code. If you are not familiar with electrical wiring, it is recommended to hire a qualified and licensed electrician.

4. **WARNING**: The outlet boxes and ceiling support joists used must be securely installed and capable of supporting a minimum of 100 pounds. The box must be directly supported by the building structure. To reduce the risk of fire, electric shock, or personal injury, install to an outlet box marked as accepting fan support and use the mounting screws provided with the outlet box.

5. **WARNING**: To reduce the risk of fire, electric shock, or personal injury, install to an outlet box marked "Acceptable Fan Support" and use the mounting screws included with the outlet box. Most outlet boxes commonly used to support lighting fixtures do not. included. That's acceptable for fan support and may need to be replaced. If in doubt, consult a qualified electrician.

6. Use UL-listed general-use switches for the installation. Refer to the instructions provided with the light kits for proper assembly.

7. Once the installation is complete, carefully check that all connections are securely tightened.

8. After making the electrical connections, position spliced conductors facing upwards and carefully insert them into the outlet box. Make sure to separate the wires, with the grounded conductor and the equipment-grounding conductor positioned on one side of the outlet box.

9. **WARNING**: To reduce the risk of electric shock and fire, do not use this fan with any solid state fan speed control device or rheostat.

10. Wait until the fan comes to a complete stop before separating the reverse switch.

11. Never insert objects into the fan blades while they are in motion.

12. Take caution when working near or cleaning the fan to prevent personal injury or damage to the fan and other items.

13. Avoid using water or detergent to clean the fan or fan blades. Instead, use a dry dust cloth or a lightly dampened cloth for most cleaning purposes.

NOTE: The manual's safety precautions and instructions provided here are not exhaustive and may not address all potential conditions and situations. It is important to exercise common sense and caution during the installation and operation of this fan.

NOTE: It is essential to supervise children to prevent them from using the appliance as a toy.

NOTE: This product is not intended for use by individuals (including children) with physical, sensory, or mental limitations or impairments unless they are supervised or trained by a responsible person who ensures their safety.

WARNING: To reduce the risk of personal injury, do not bend the blade holder (also called the "flange") during assembly or after installation. Do not insert objects in the path of the blade.

WARNING: Remove the rubber motor stops on the bottom of the fan before installing the blades or testing the motor.

WARNING: To reduce the risk of fire or electric shock this fan is NOT suitable for use with solid-state speed controls.

WARNING: Electrical diagrams are for reference only. Optional use of any light kit shall be UL-listed and marked suitable for use with this fan.

MOUNTING BRACKET FOR DIFFERENT CEILING

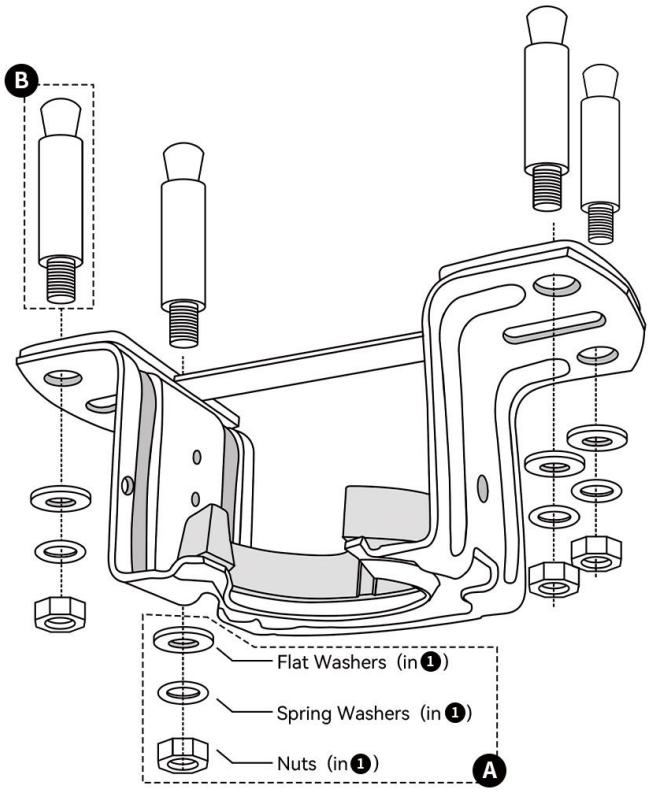

FOR CONCRETE CEILING

1. Marking screw holes in the ceiling
2. Punching holes in the ceiling with an electric drill
3. Remove Expansion Screws A and Install B in Ceiling
4. Install the mounting bracket and install the washers and screws A in sequence

IMPORTANT :
SCREWS & NUTS MUST BE TIGHTENED TILL SNUG

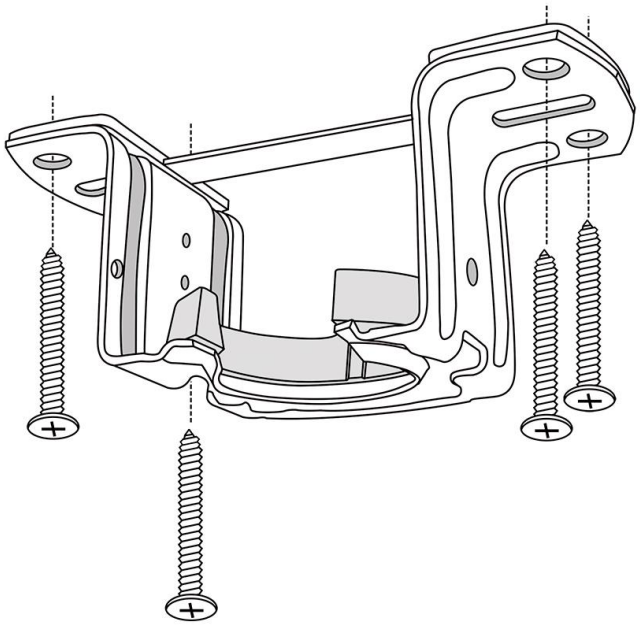

FOR WOODEN CEILING

1. Marking screw holes in the ceiling
2. Install the mounting bracket and install the self-tapping screws

IMPORTANT :
SCREWS MUST BE TIGHTENED TILL SNUG

INSTALLATION INSTRUCTIONS

PART 1 Install the mounting bracket

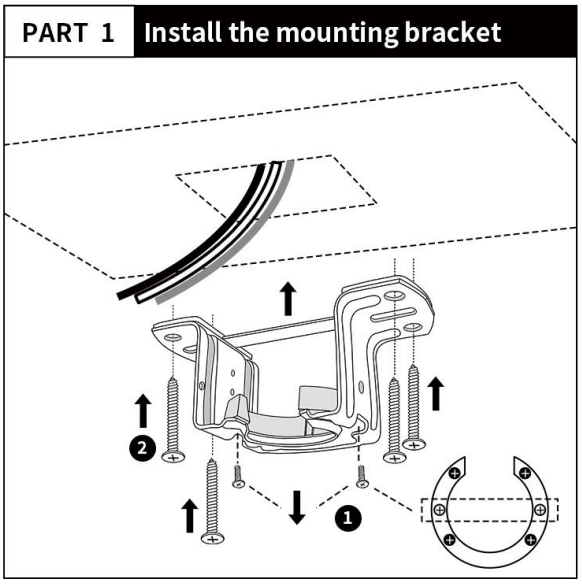

❶ Loosen the two screws in the center
❷ Tighten the screws to secure the bracket
(Refer to the previous page for detailed installation)

PART 2 Remove pre-set screws

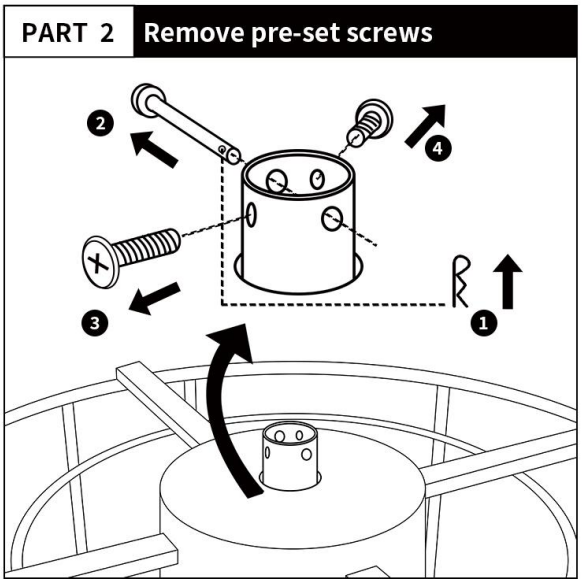

❶ Remove the metal pin
❷ Pull out the metal bar
❸ ❹ Unscrew the screws

PART 3 Assembly Boom Kit

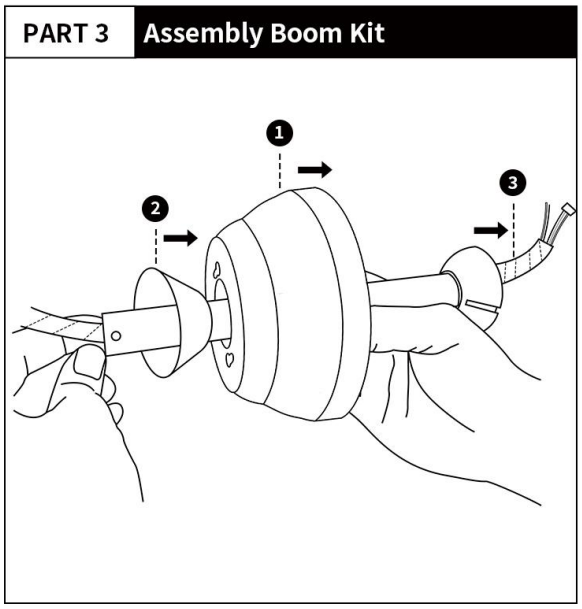

❶ Put the canopy in the boom
❷ Put the coupling cover in the boom
❸ Pass the power wire through the boom

PART 4 Install the boom

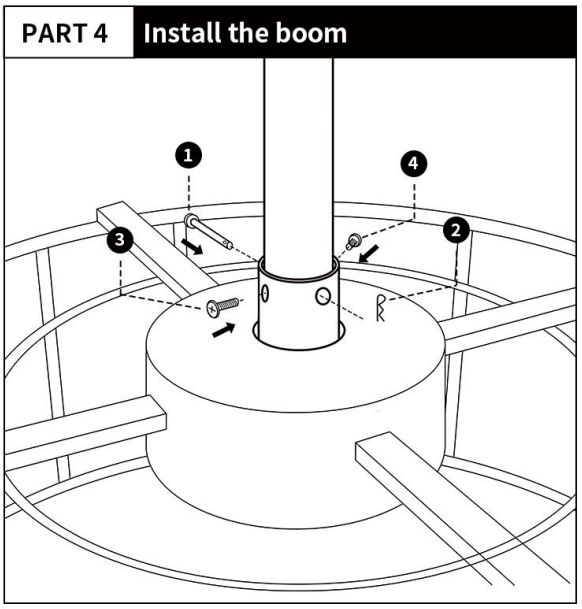

❶ Put the metal pin through the boom
❷ Put the clevis pin lock the metal pin in step ❶
❸ ❹ Tighten the screws

INSTALLATION INSTRUCTIONS

PART 5 Install the bulbs

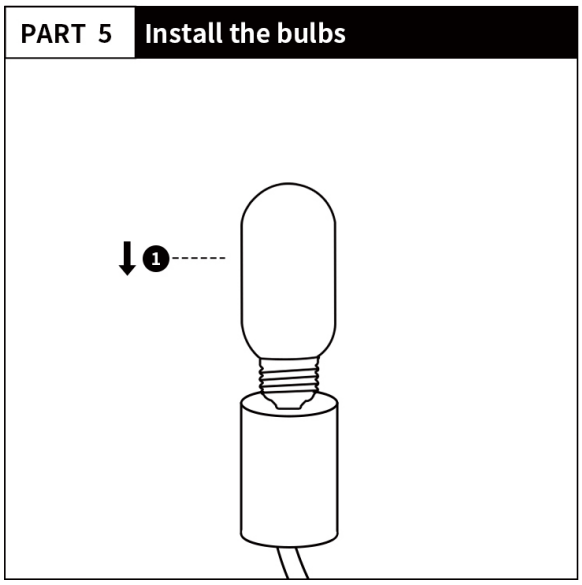

❶ Install the bulbs
(Light bulbs are not included in the product)

PART 6 Hang the fan body

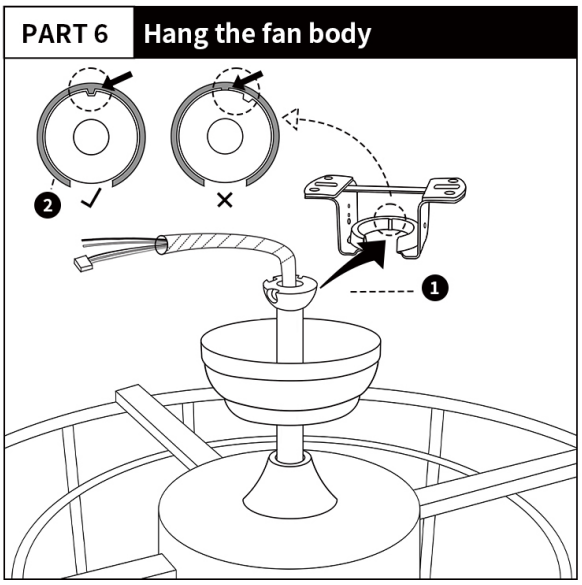

❶ Put the downrod on the bracket
❷ Adjust the ball catch position

PART 7 Connect the power cord

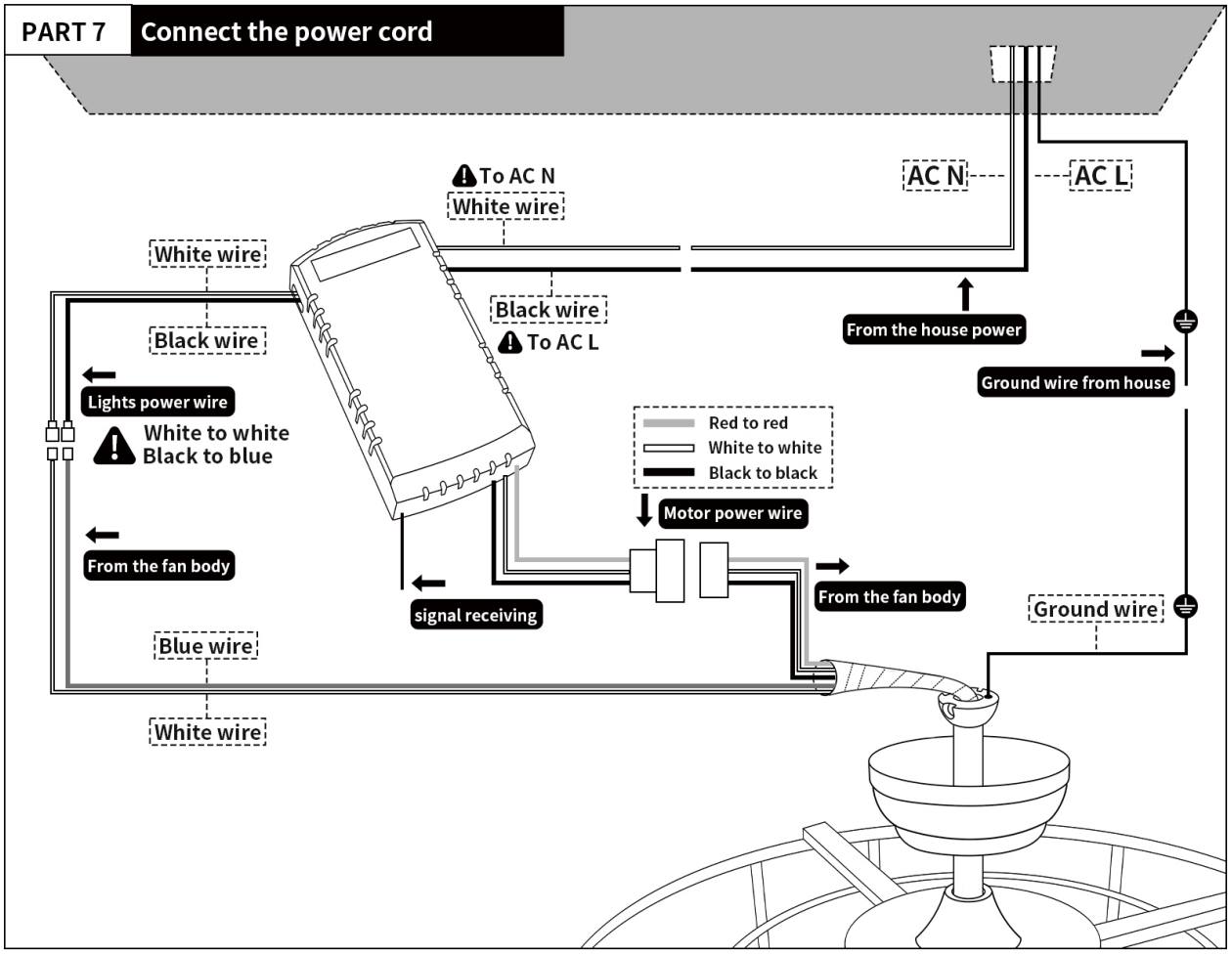

INSTALLATION INSTRUCTIONS

PART 8 Placement Controller

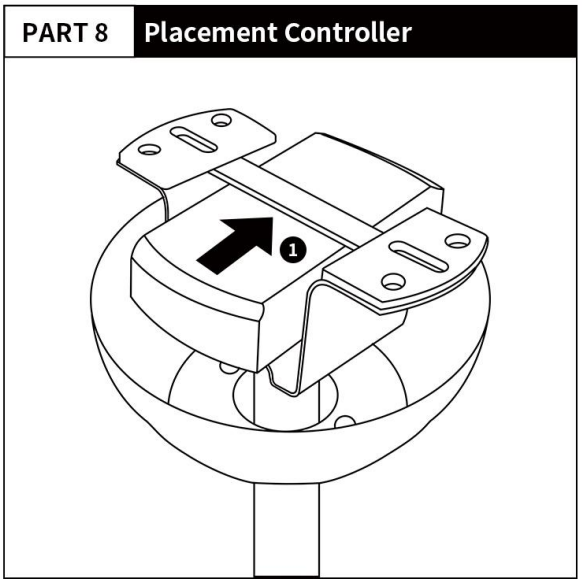

❶ Put the controller in the bracket

PART 9 Install the cover

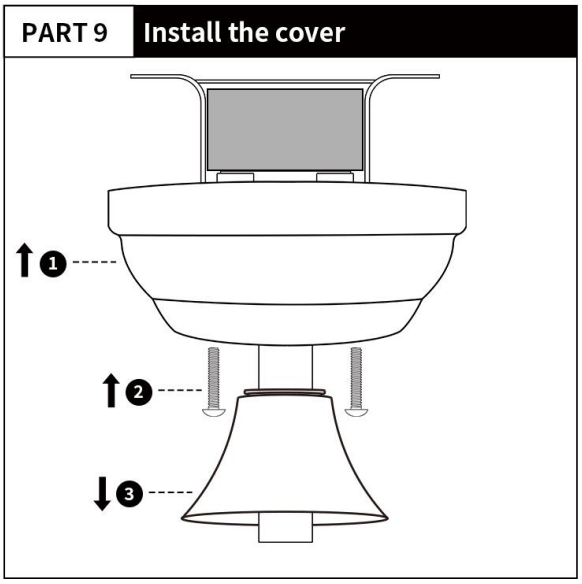

❶ Push the canopy up
❷ Screw the screws
❷ Push the coupling cover down.

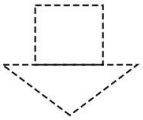

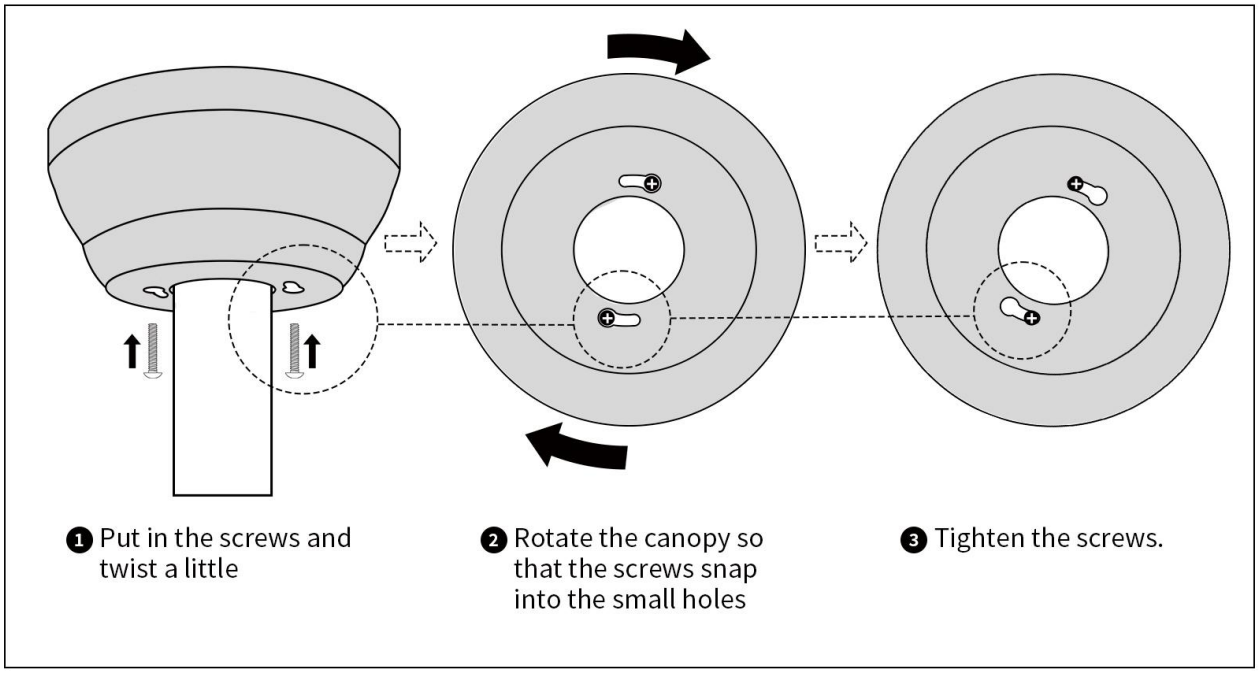

❶ Put in the screws and twist a little

❷ Rotate the canopy so that the screws snap into the small holes

❸ Tighten the screws.

MAINTENANCE

Due to the fan's natural movement, connections may get loose after a period of usage. To ensure a proper and safety usage, inspect the suspension system and tighten all connections every 6 months.

CLEANING

Cleaning the fan periodically will prolong its useful life. Basic cleaning procedures are as follows:

1. Please shut off the power before you clean the light fan and replace the bulbs.
2. The bulbs and nearby parts will be still hot after the power is shut off. To avoid burned, please clean them after they are cooled down.
3. Don't use sandpaper, wire brush and other sharp tools to clean the fan light.
4. Don't clean the fan light by using detergents, acid or alkaline solvents.
5. Use only soft or lint-free cloth to clean the fan light.
6. Please dry the ceiling fan by cold-blast air after cleaning, in order to prevent dangerous leakage caused by water infiltrated into electriferous parts of the fan light or prevent rust of wet metal parts.
7. There is no need to oil the fan.

REMOTE CONTROL

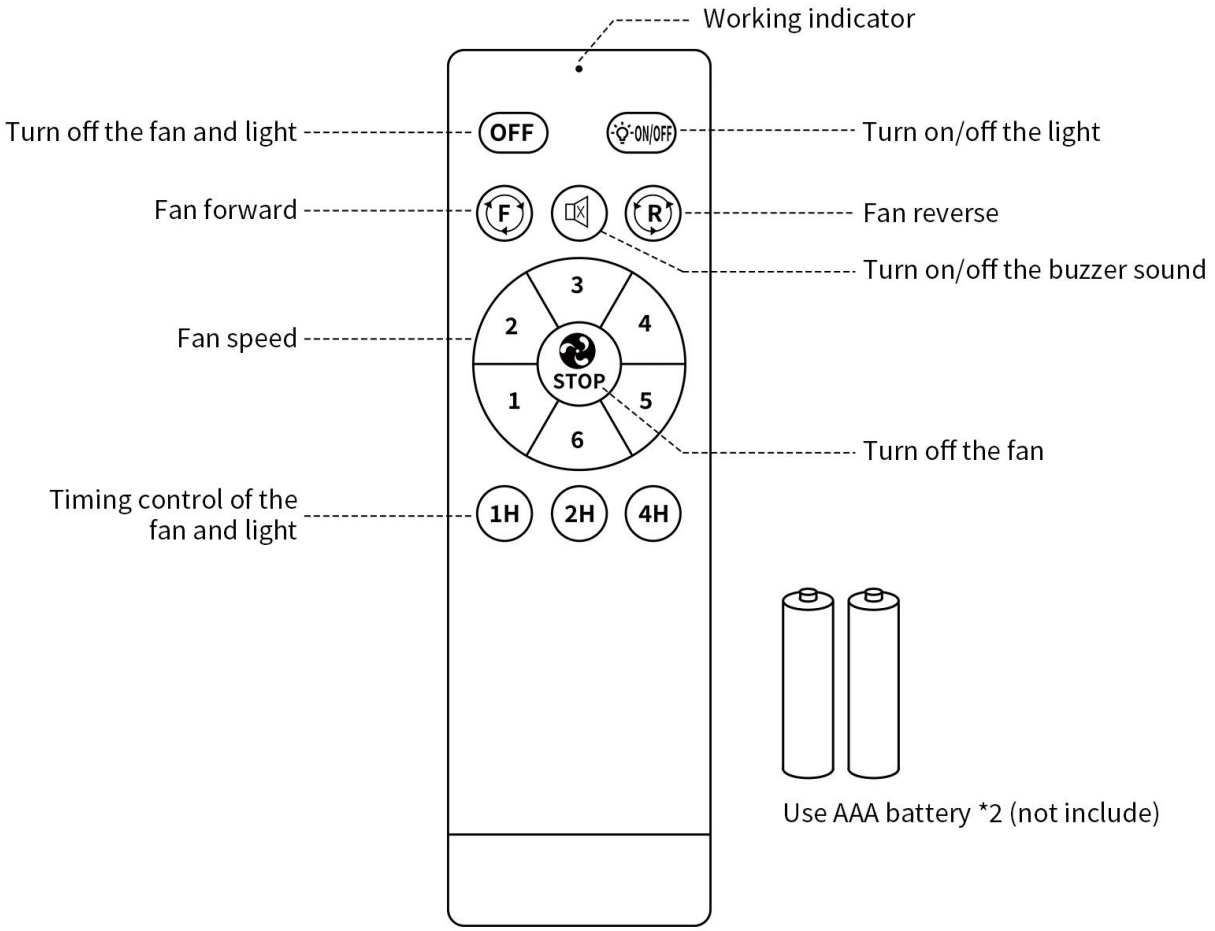

Re-pairing the remote and controller

1. Turn off the room power, then turn it on again.
2. After the buzzer sounds, press ‘2’ and ‘2H’, then the fan starts to turn.
3. Turning off the fan using the remote control.
4. Now you can control the fan again.

Every time you use the wall switch to turn on the fan light, it will emit a beep sound as an indication that it's being powered on. If you don't want to hear this sound every time you operate it, you can use the mute button on the remote control to silence it. The fan light can be fully controlled using the remote control, allowing you to easily turn it on or off, adjust the speed, change the direction of airflow, and even set timers. Please enjoy the convenience and comfort of using your fan light! (Please note that the beeping sound is a normal notification when the fan light is powered on and cannot be completely disabled.)

CAUTION

Read instructions carefully for safe installation and fan operation. If unsure consult a qualified electrician

THANK YOU FOR YOUR PURCHASE

Thank you for purchasing this quality product. To ensure correct function and safety, please read and save all instructions before using the product

---

LIGHT FAN THE BEST PARTNER OF AIR CONDITIONER & AIR PURIFIER

Many people believe that fans are only used during the summer, but they actually serve a greater purpose in speeding up indoor air circulation. For instance, when using an air conditioner in the summer, improper installation or a low-power unit can result in uneven temperature distribution in a room. This is where a fan comes in handy—it helps move hot and cold air around, creating more uniform and comfortable temperatures. The same principle applies to keeping rooms warm during the winter. Since air conditioners consume a lot of energy, setting the temperature just 1°C higher in the summer or 2°C lower in the winter can save over 10% of energy. By using a fan alongside the air conditioner, you can set the temperature between 26°C-28°C in the summer and 16°C-18°C in the winter and still feel cool and warm. Moreover, nowadays many households have air purifiers, and when used in conjunction with a fan for air circulation, it can enhance the purifier's efficiency and improve indoor air quality evenly throughout the space.

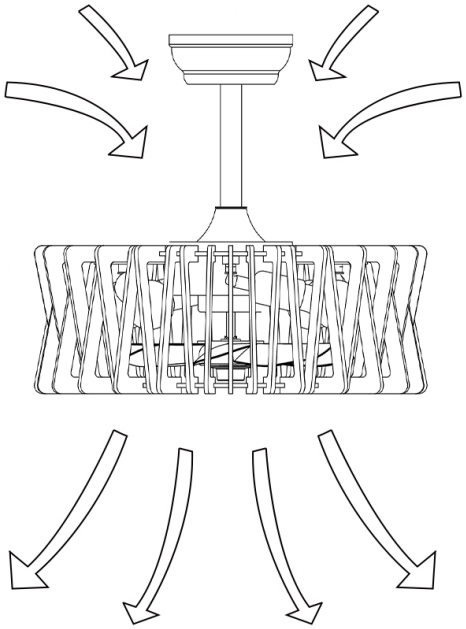

Fan forward

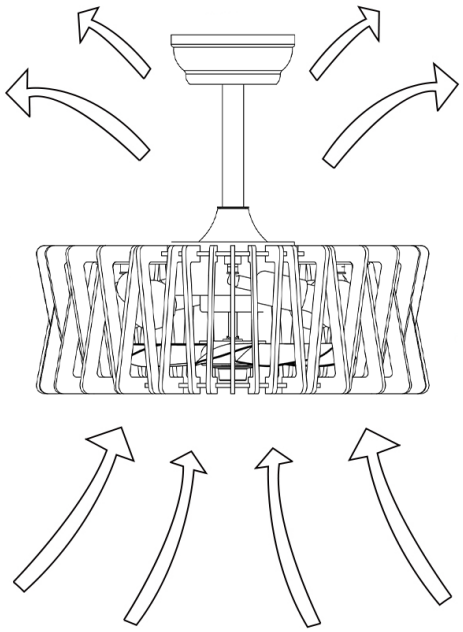

Fan reverse