Assembly Instructions

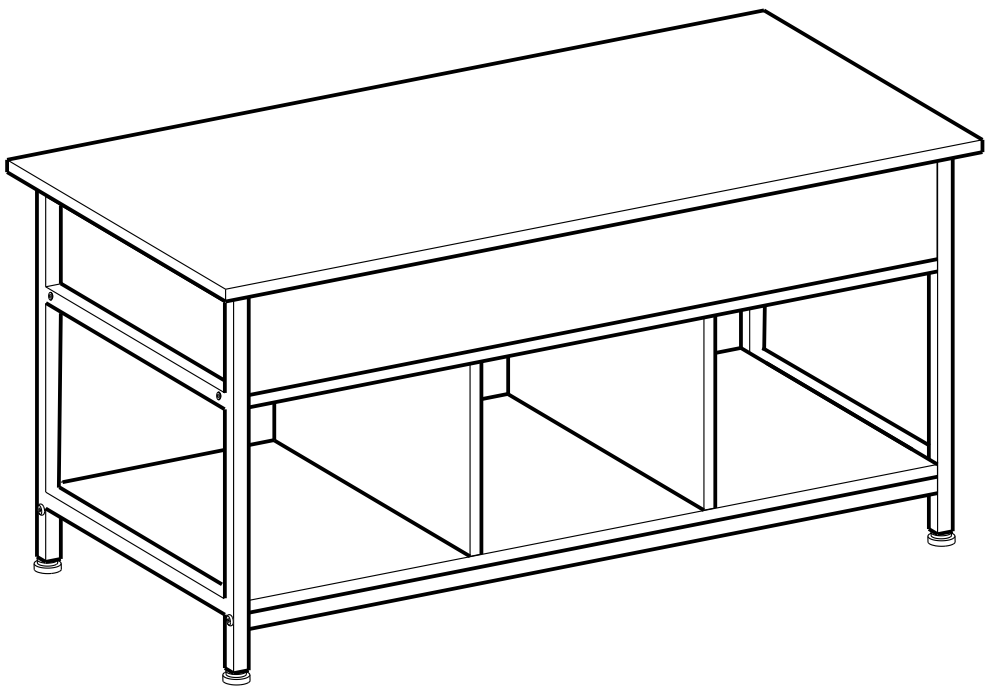

User Guide (English)

Introduction

1. Please read the following instructions carefully and use this product properly.
2. Please take good care of this manual and hand it over when transferring the product.
3. This summary may not include every detail of all changes and steps under consideration. For more information and help, please contact us.

Notes

1. This product is for indoor use only. Personal injury and/or product damage may occur if the product is used outside its intended use and/or if the product has been changed/modified from its original design. The product must be assembled and used according to the instructions. The seller shall not assume any responsibility or obligation for any damage caused by improper assembly or improper use.
2. Do not place it in a humid environment for a long time to prevent mildew or in any high temperature area to ensure its service life.
3. When assembling, first loosely align all screws with the corresponding pre-drilled holes, and then tighten the screws one by one.
4. Regularly check the screw tightness during the use of the product. Re-tighten if necessary to ensure structural integrity.

Warnings

1. Children are not allowed to assemble products. When assembling, put small parts out of the reach of children, because they may be fatal if swallowed or inhaled.
2. Children are not allowed to climb or stand on the product to avoid personal injury caused by tipping over.
3. Put the plastic packaging bags out of the reach of children to avoid any potential danger, such as suffocation.
4. Avoid sharp objects and corrosive chemicals, in order to prevent damage to the product or injury.
5. If there are defects and/or missing parts, please do not use this product, as it may cause damage or injury.
6. Do not disassemble and assemble the product repeatedly, so as not to damage the accessories.
7. If the product comes with the anti-tip device, please be sure to install it to prevent the product from tipping over and causing unnecessary harm.
8. If the product is built in a socket, please keep the product away from water or humid environment, so as not to cause electric leakage and short circuit to harm the human body.
9. For products containing batteries, when replacing batteries, please don't throw away discarded batteries at will, so as not to cause environmental and water pollution.

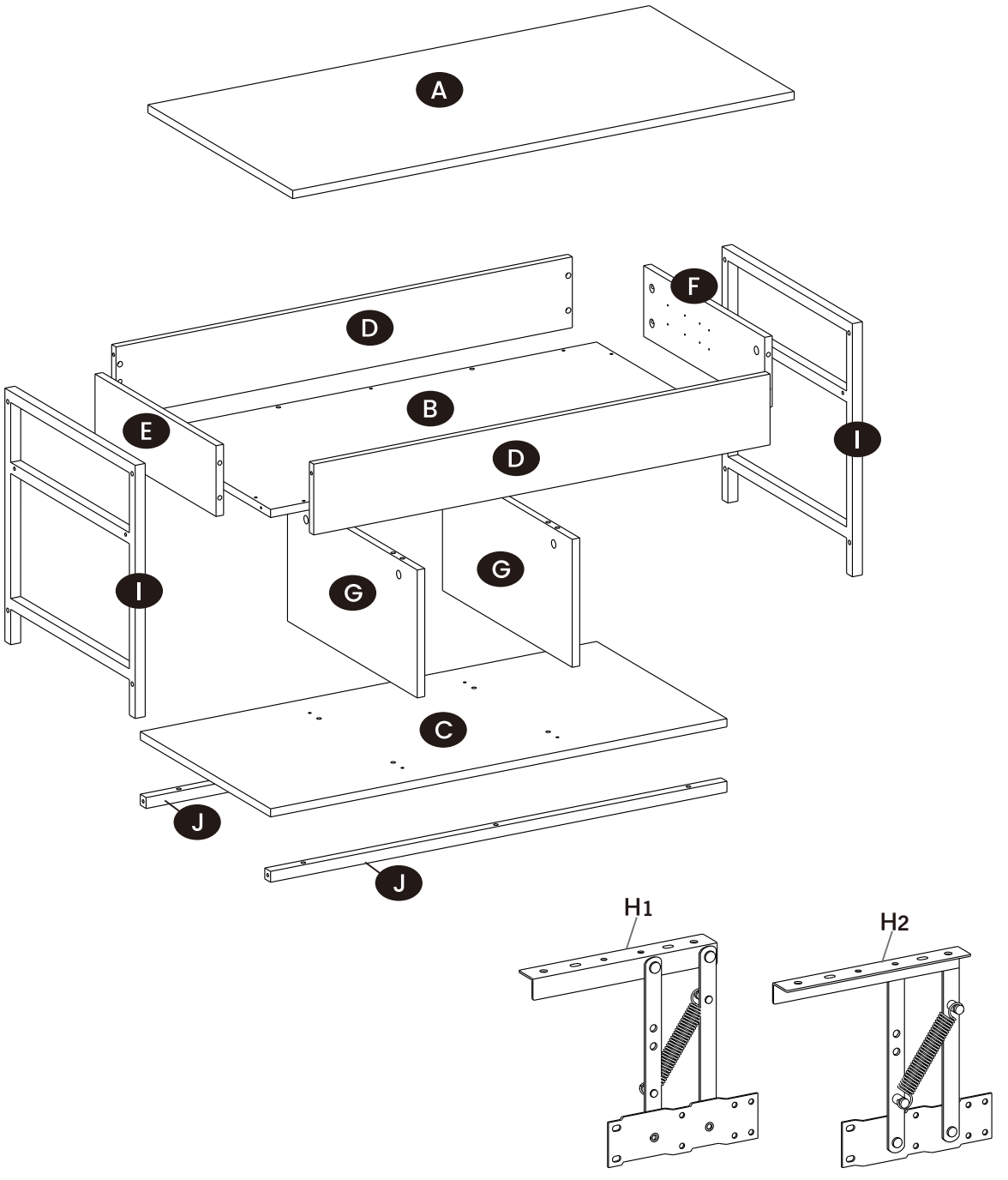
A
D
F
B
E
D
I
G
G
I
C
J
J
H1
H2

A × 1

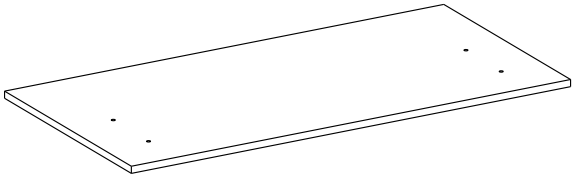

B × 1

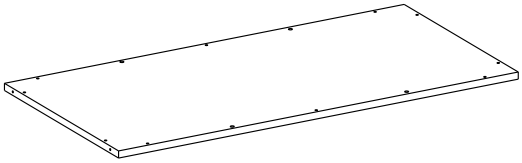

C × 1

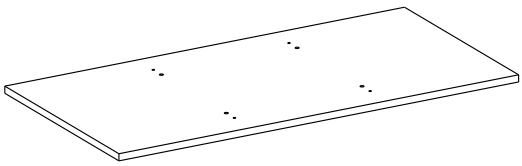

D × 2

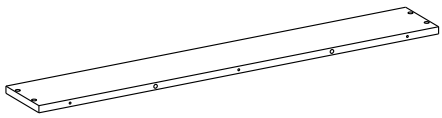

E × 1

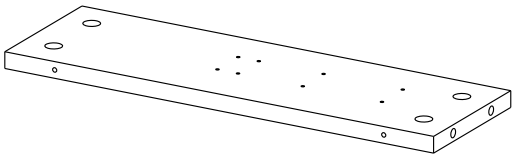

F × 1

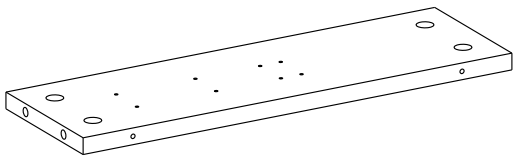

G × 2

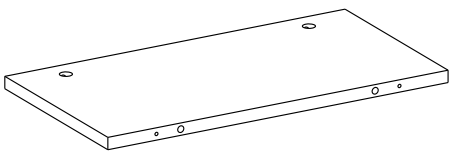

H × 1

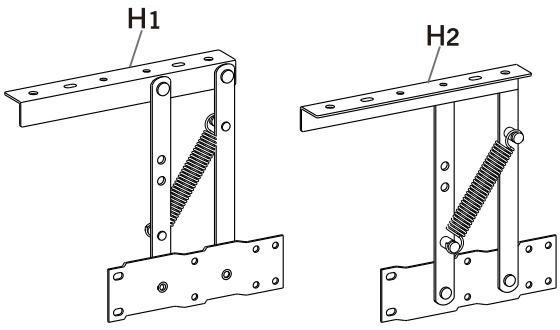

I × 2

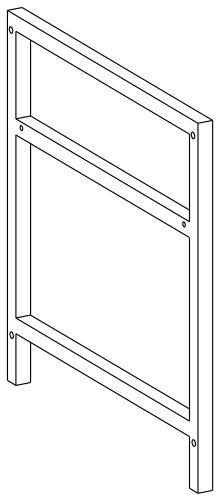

J × 2

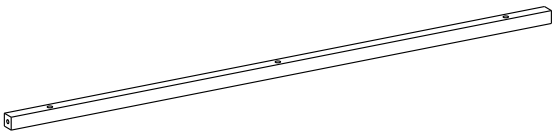

❶ ×22

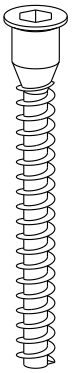

❷ ×10

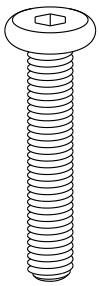

❸ ×4

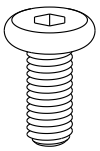

❹ × 16

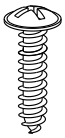

❺ ×8

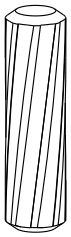

❻ ×12

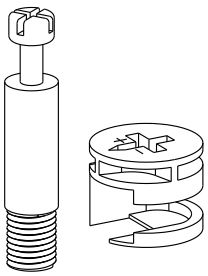

❼ × 4

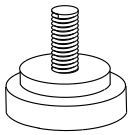

❽ × 1

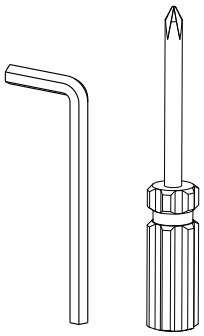

1

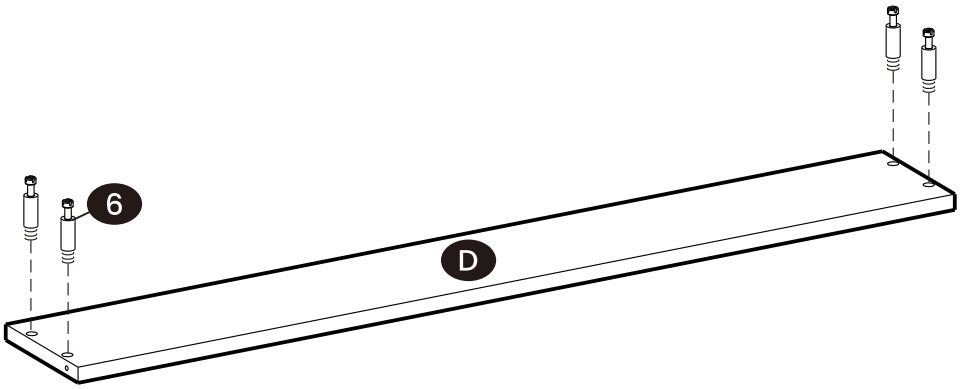

× 2

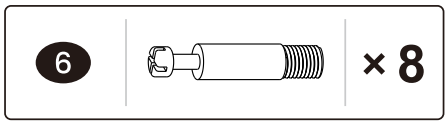

2

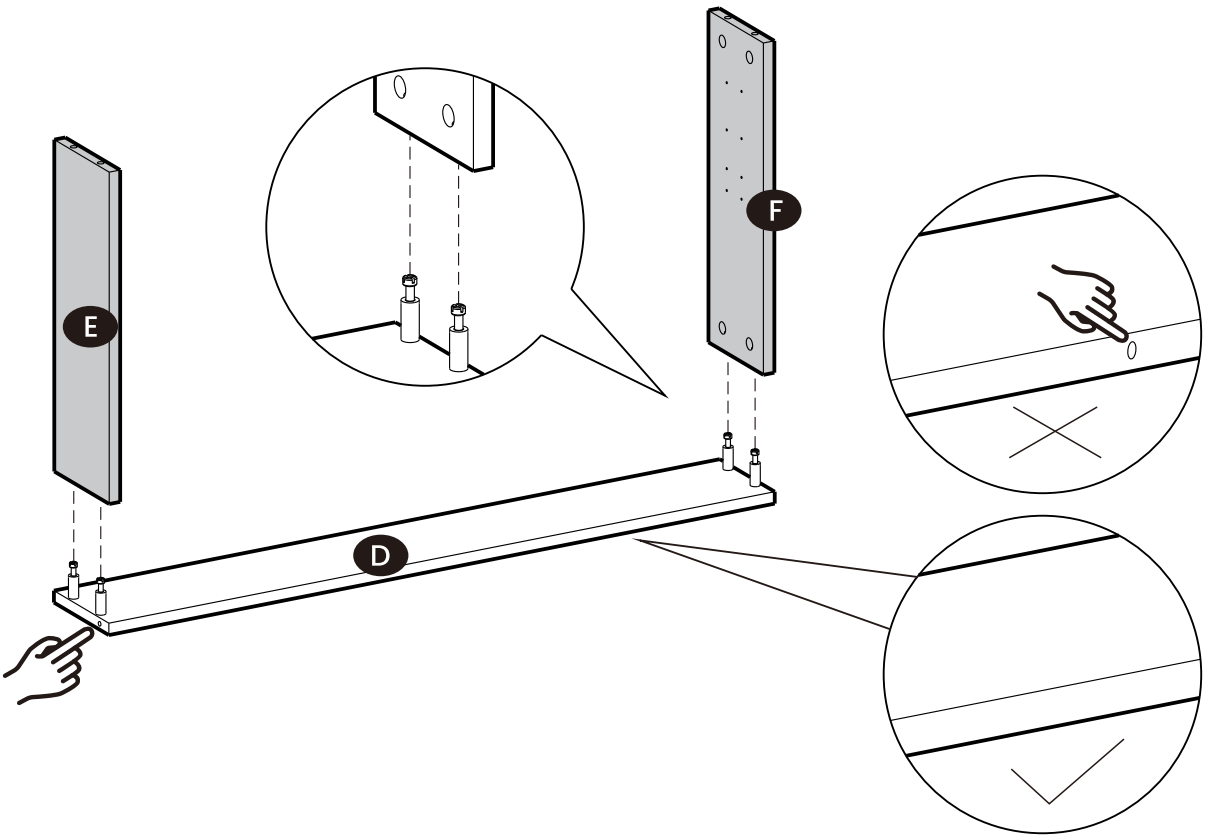

3

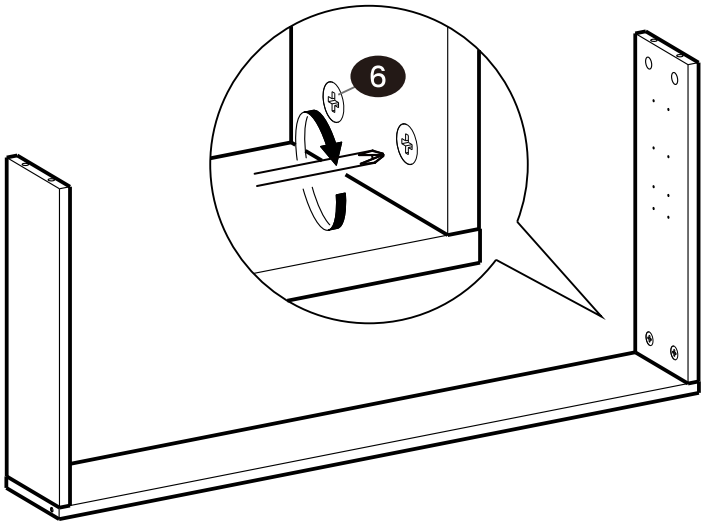

6		× 4

4

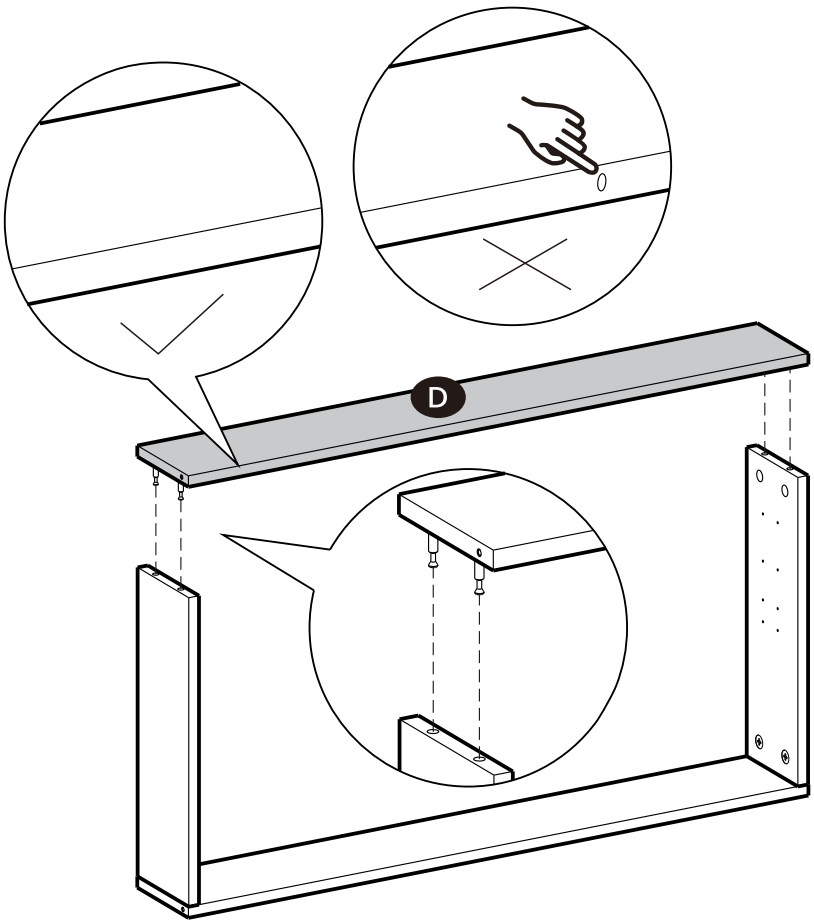

5

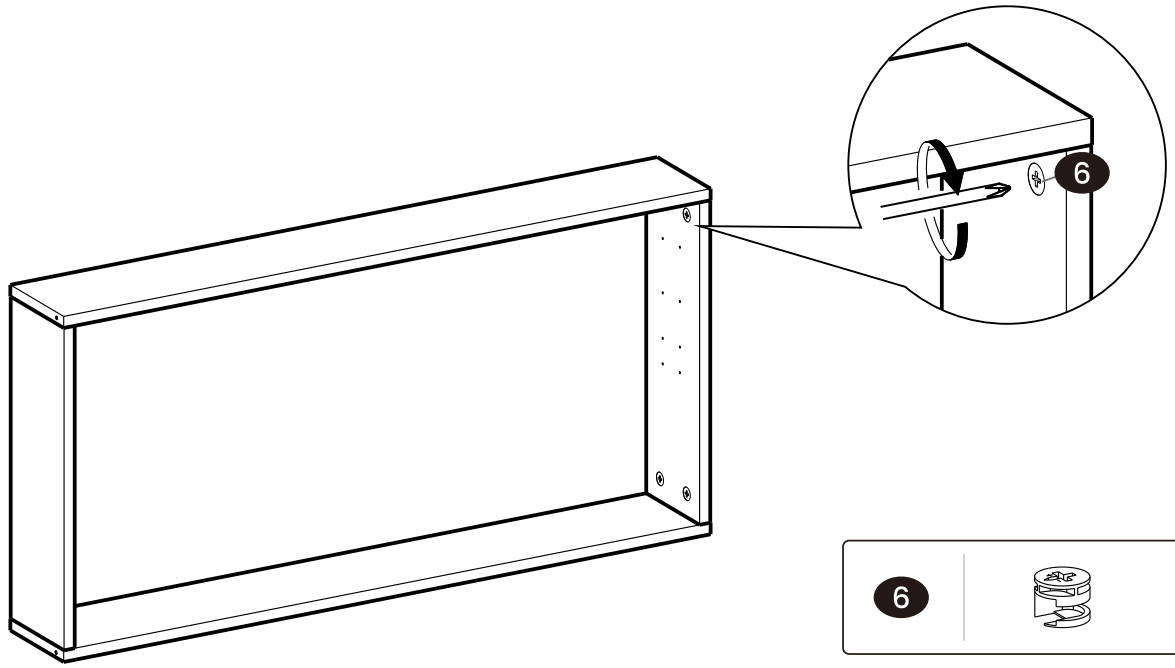

6		× 4

6

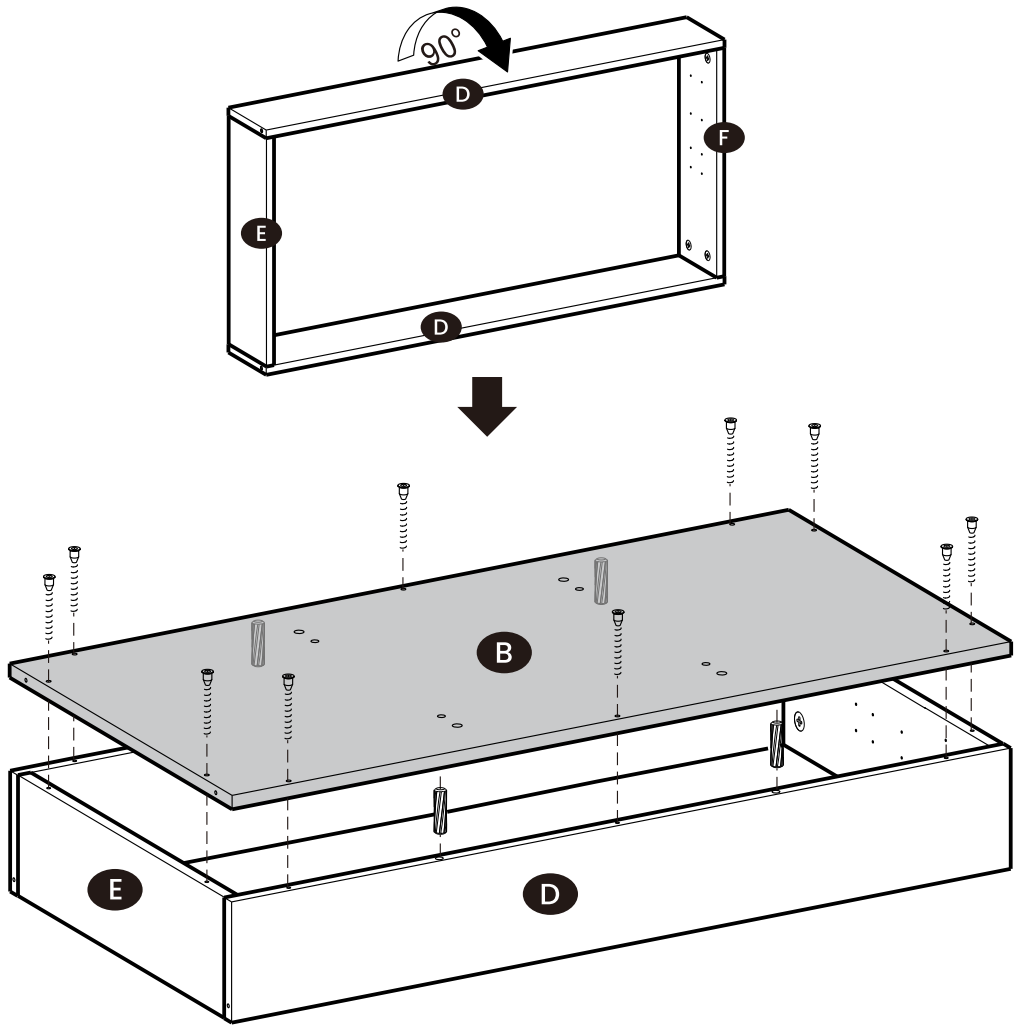

1		×10	5		× 4

7

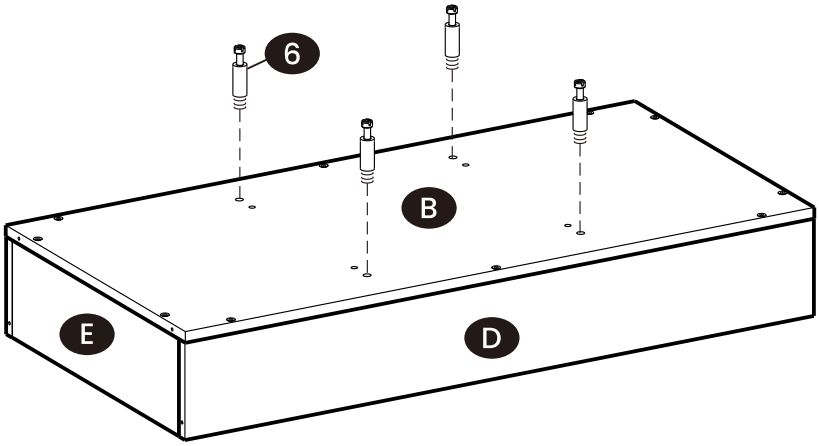

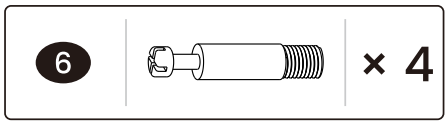

8

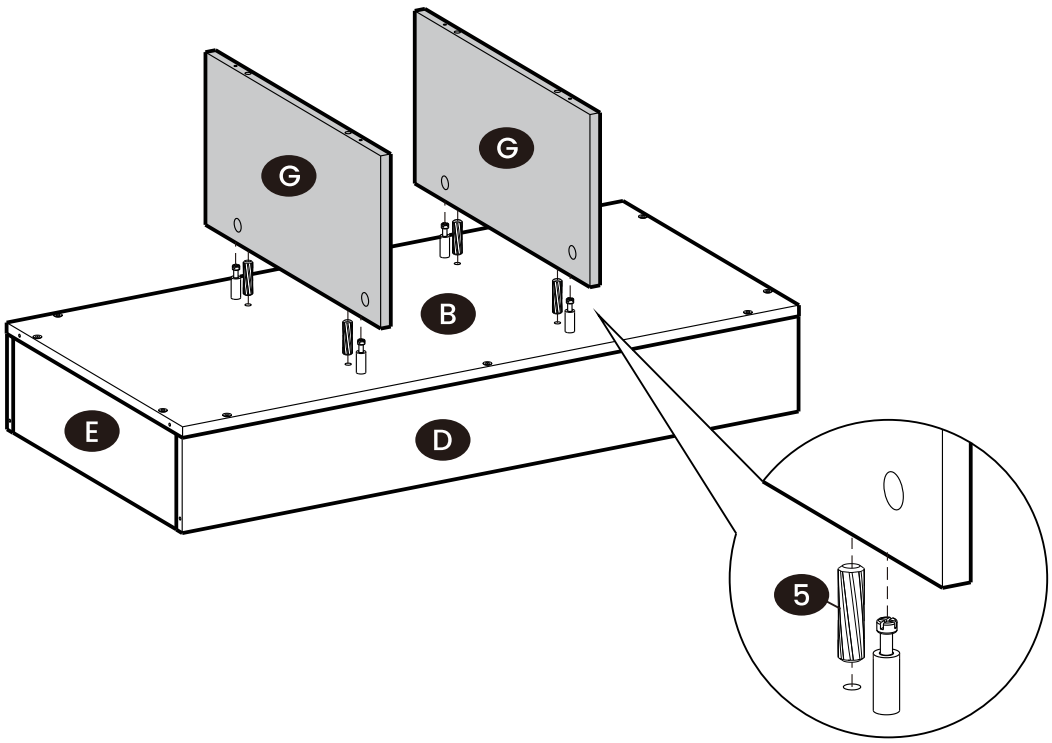

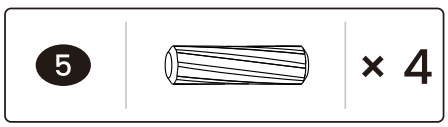

9

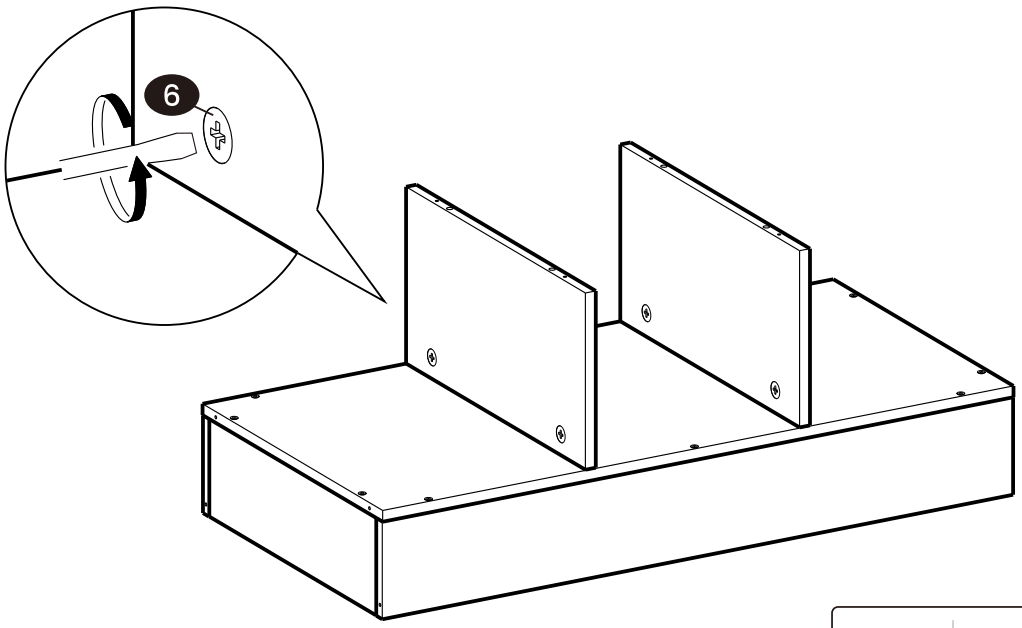

6		× 4

10

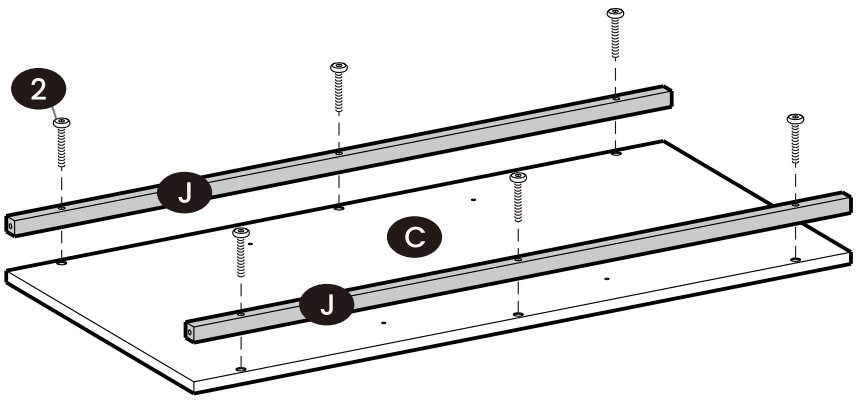

2		× 6

11

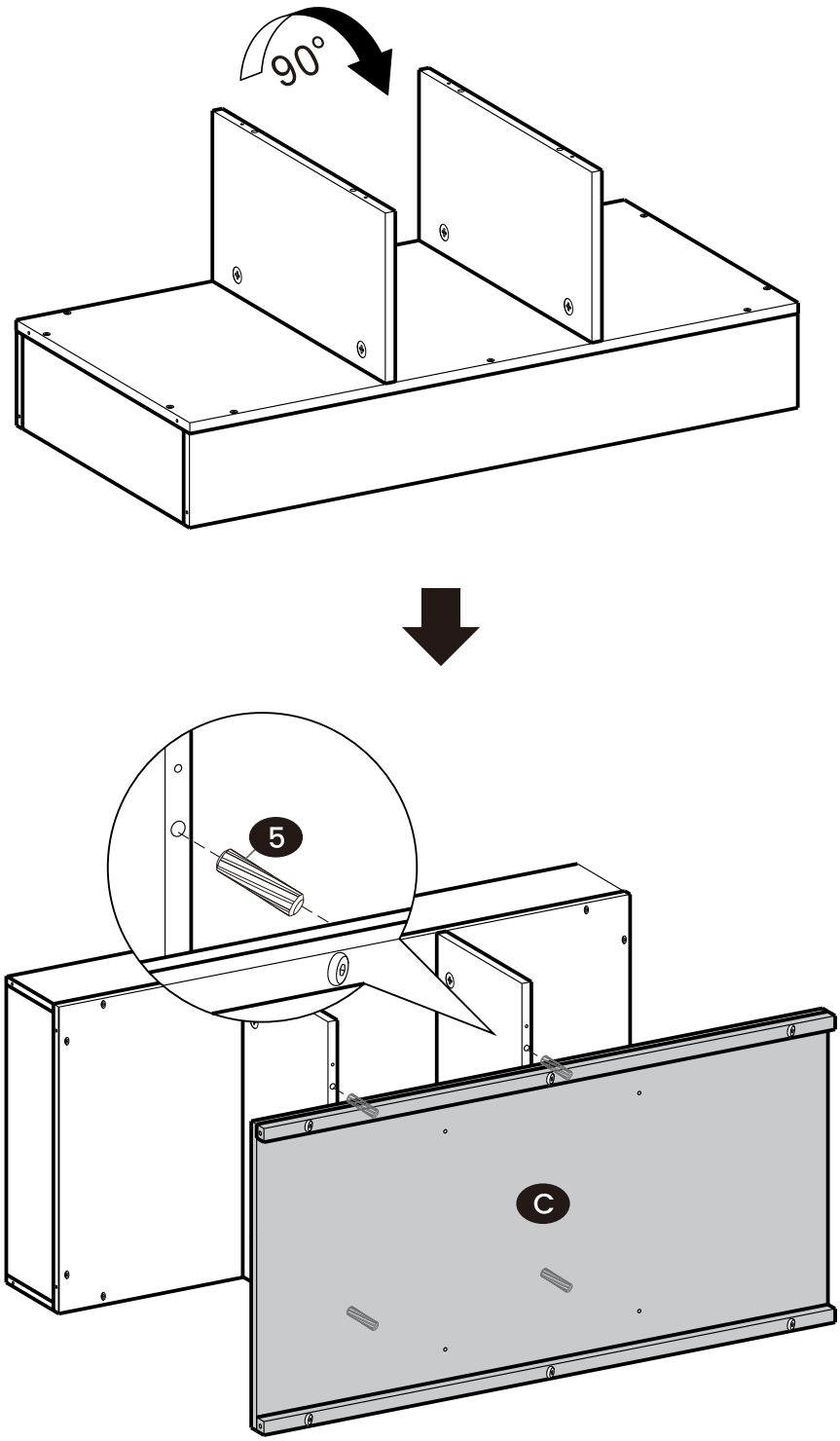

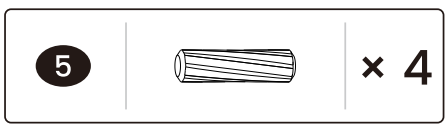

12

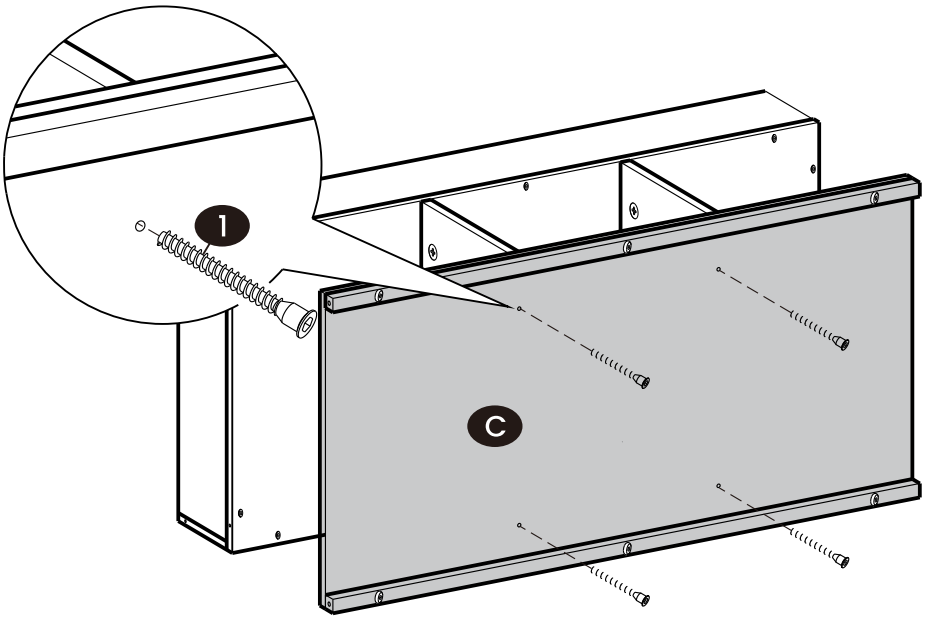

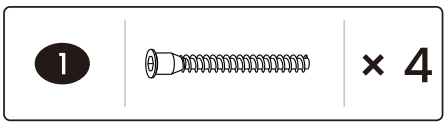

13

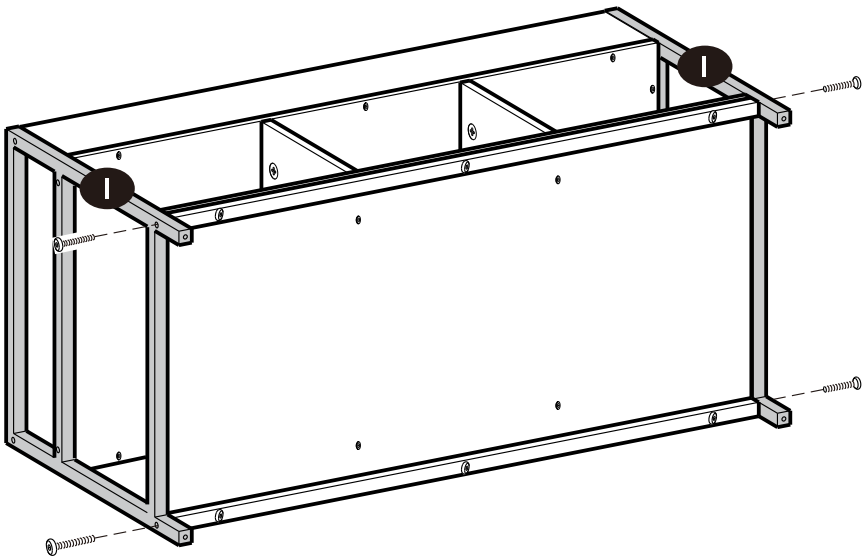

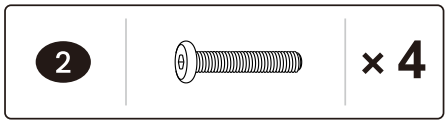

14

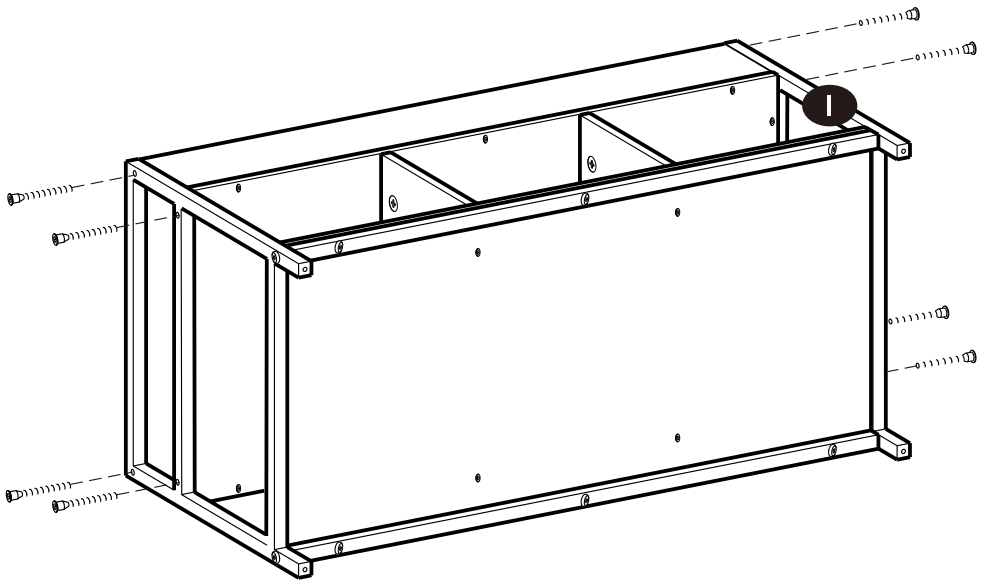

1		× 8

15

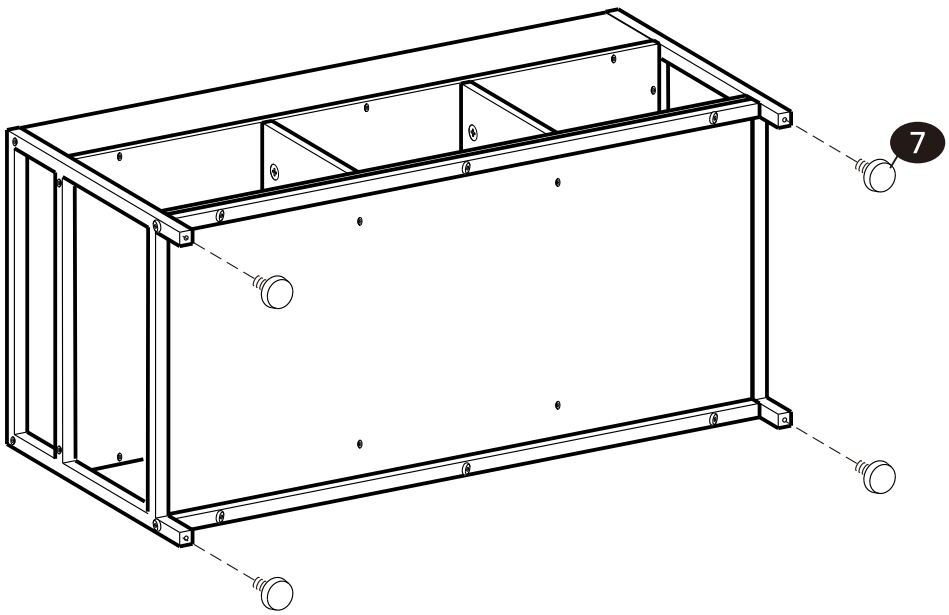

7		× 4

16

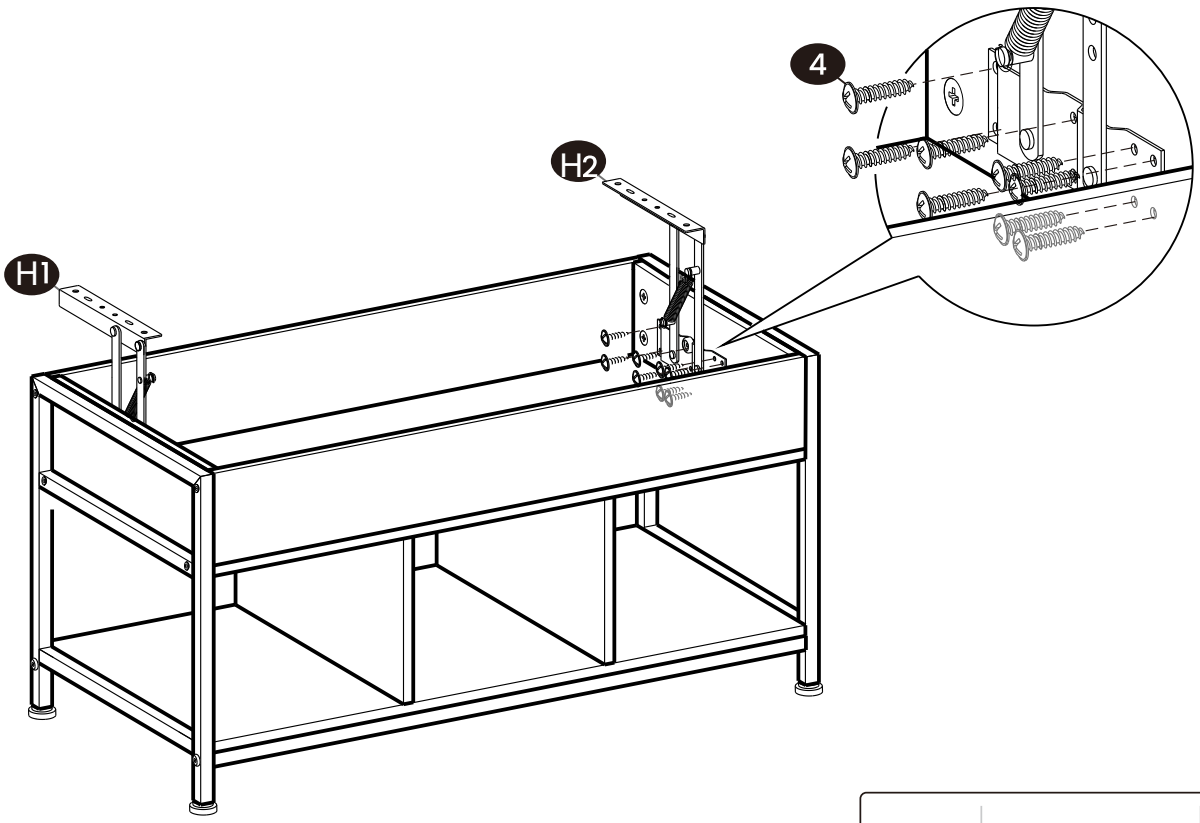

4		×16

17

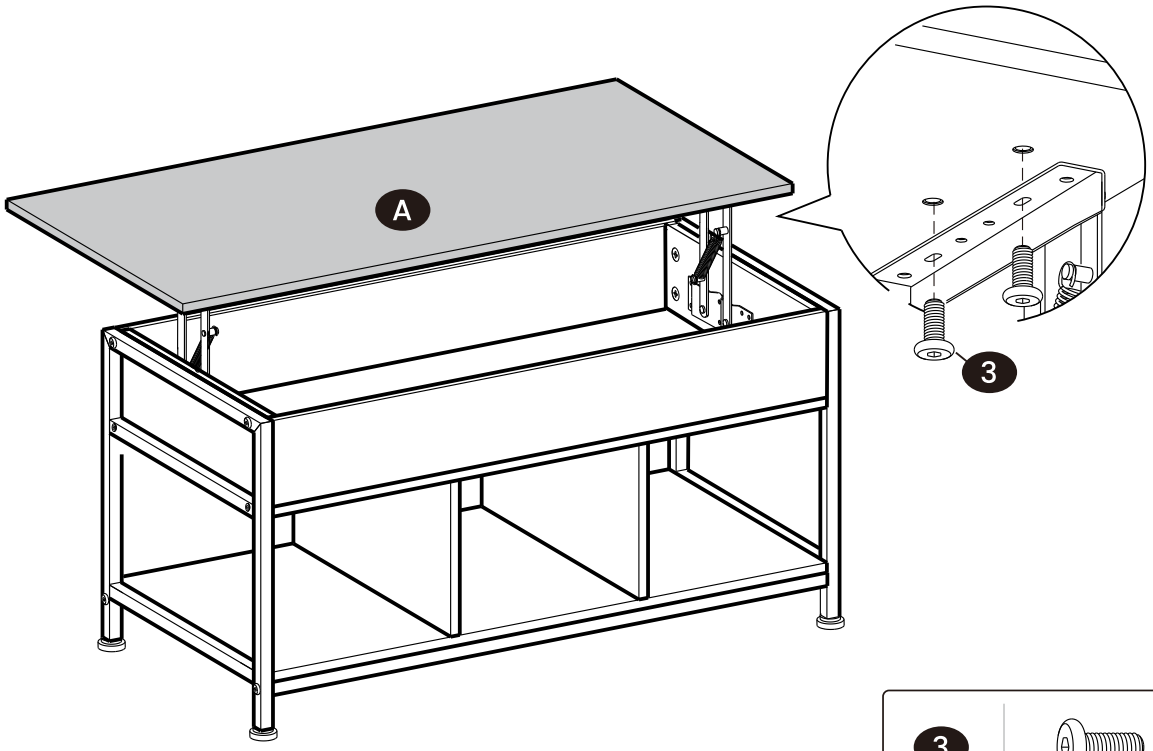

3		× 4

18

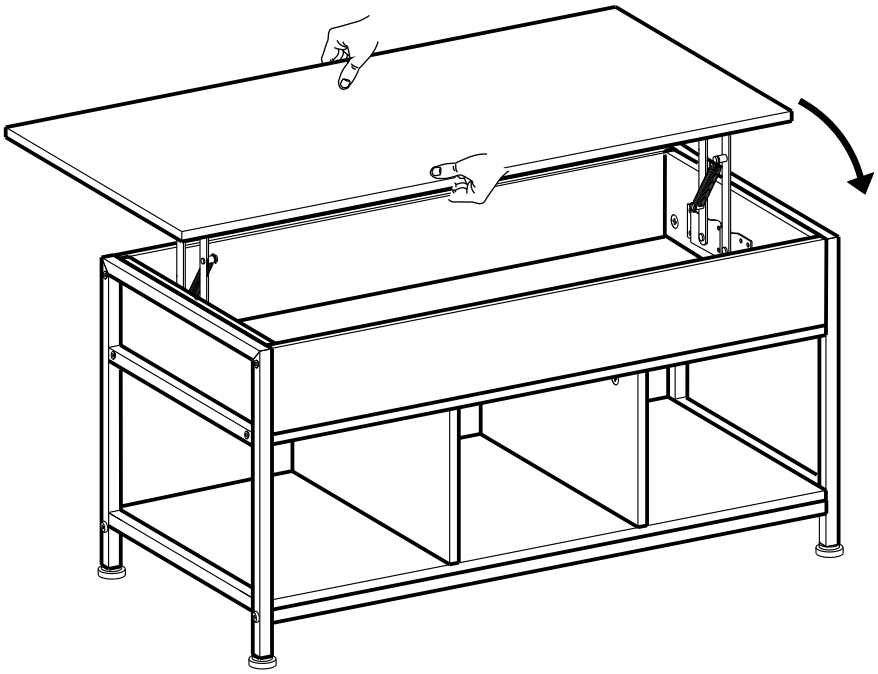

19

