INSTRUCTIONS

Note:

1.Please make sure that the electricity is powered off during installation!
2.Only a professional electrician should install this kind of products!

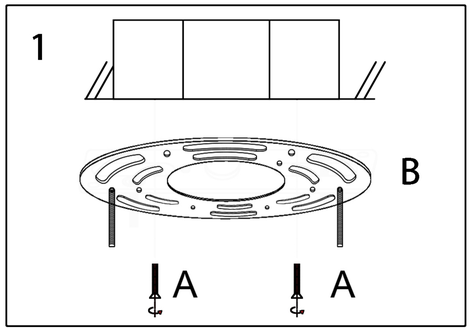

1.Install the bracket B to the ceiling junction box with screw A.

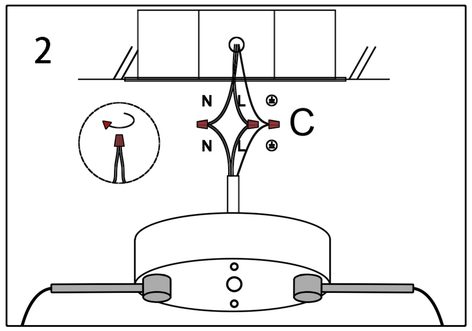

2. Connect the wire to your home line with cap connector C.

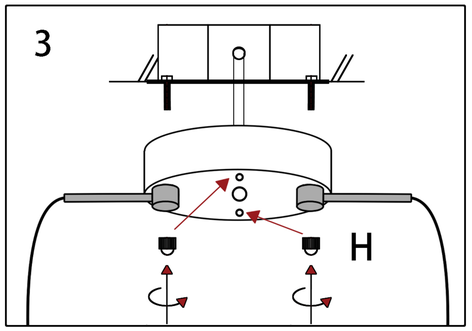

3. Install the canopy to the bracket with cap nuts H.

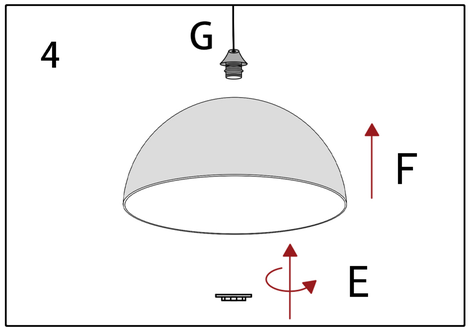

4. Install the lampshade F to the fixture with socket ring E, after that install the bulb.

INSTRUCTIONS

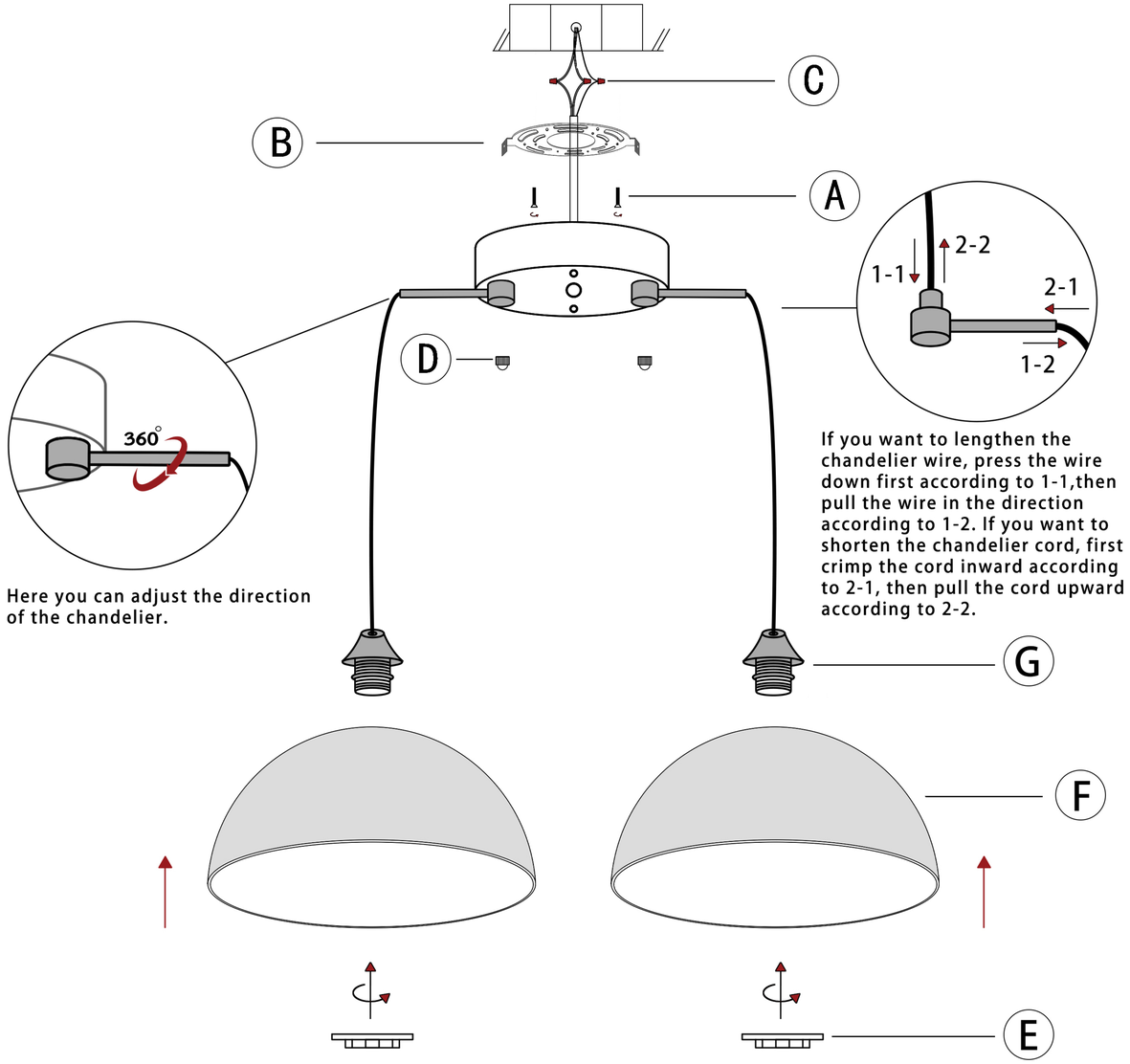

Here you can adjust the direction of the chandelier.

If you want to lengthen the chandelier wire, press the wire down first according to 1-1,then pull the wire in the direction according to 1-2. If you want to shorten the chandelier cord, first crimp the cord inward according to 2-1, then pull the cord upward according to 2-2.

A 3PCS	B 1PCS	C 3PCS	H 2PCS
D 1PCS	E 2PCS	F 2PCS	G 2PCS